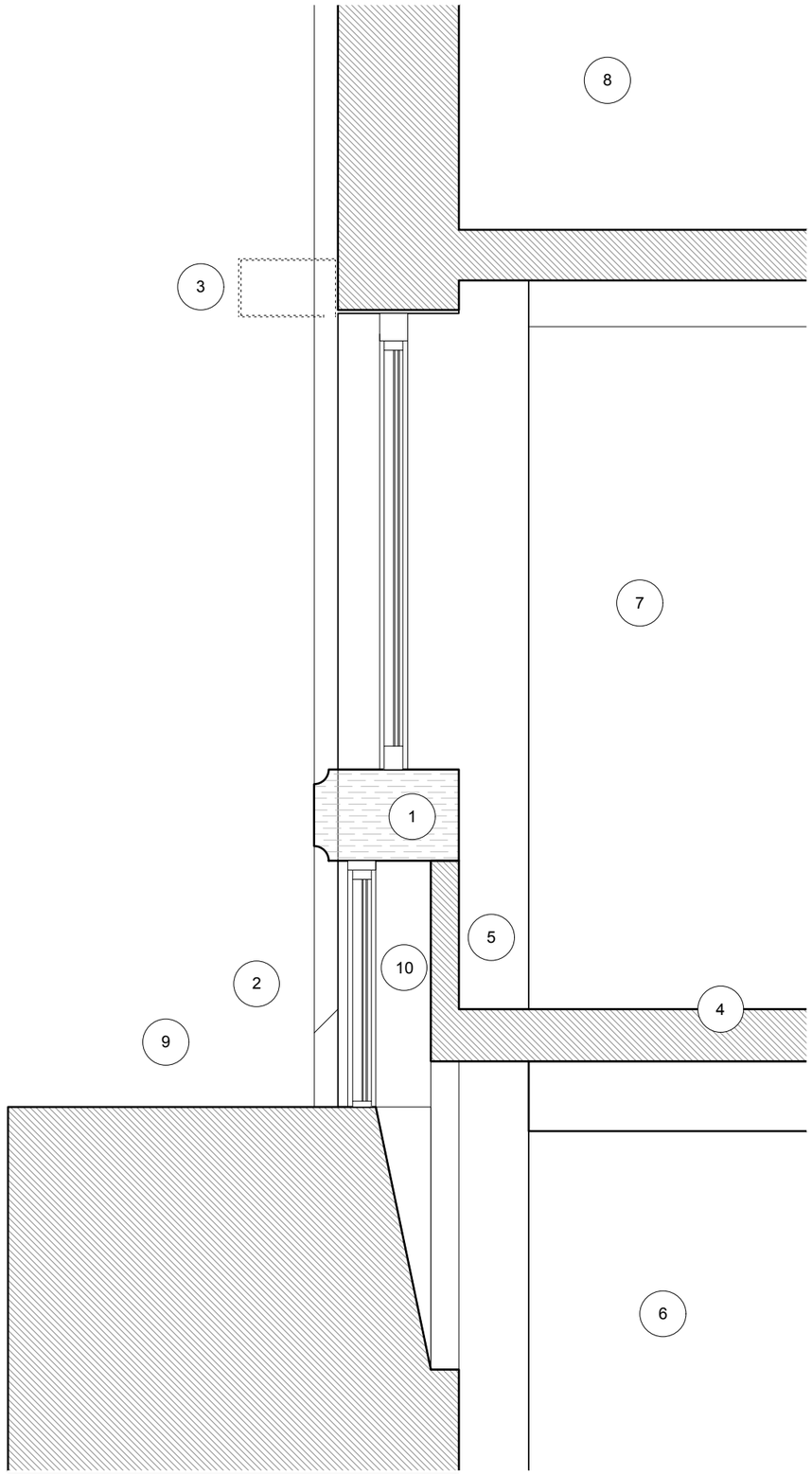

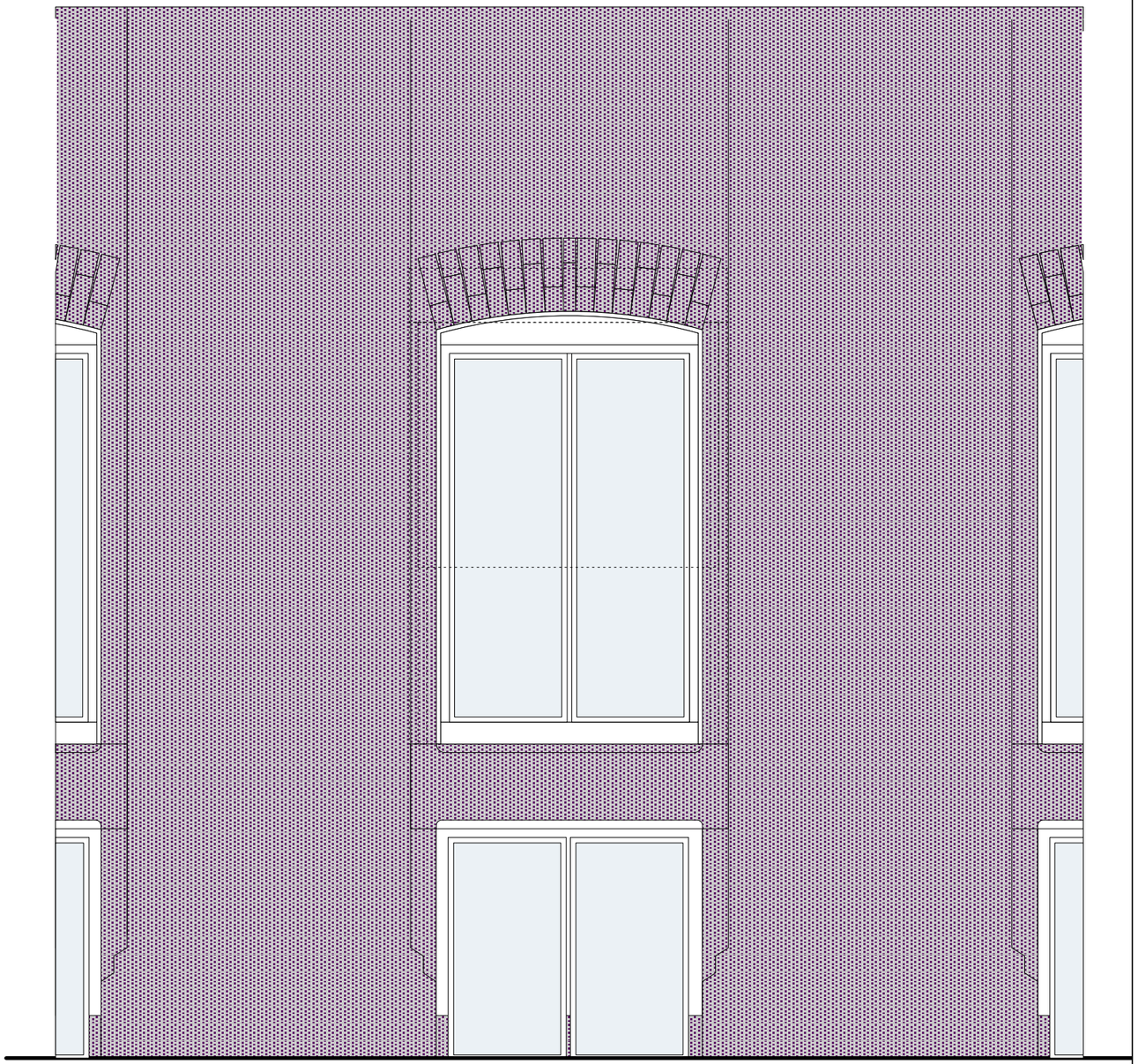

1) Existing Stone lintel
2) New Basement window to match above
3) Roller shutter removed
4) Original Timber floor
5) Single course of brick
6) Basement
7) Ground Floor
8) First Floor
9) Pavement
10) New Basement Window

Design and drawings are the copyright of architecture:m.

Written permission must be sought before duplication

Any discrepancy found between information given on this drawing and that given elsewhere or recorded on site shall be notified immediately to the project architect in writing

Do not scale from this drawing or derive dimensions from digital media

All dimensions are to be checked prior to works commencing on site

Status Key
S: Survey
F: Feasibility
P: Planning
D: Detailed Detail
T: Tender
C: Construction
B: As Built

architecture:m
RIBA
Chartered Practice

a: 1st floor,
12 tariff street,
manchester,
m1 2ff
t: +44 [0] 161 237 3324
f: +44 [0] 161 236 7448
e: mail@architecturem.co.uk

p: 45/47 Dale Street
d: Prop Win detail

d: 07.08.13

s: 1:25@A3

db: DIR

n: project: 312 • drawing: 250 • status: • rev: