

PLAN

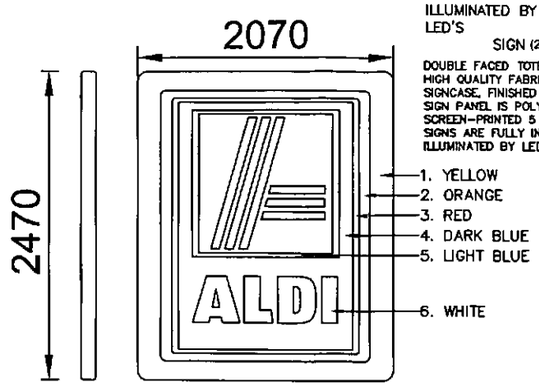

ILLUMINATED BY LED'S

SIGN (2070 x 2470)

DOUBLE FACED TOTEM MOUNTED SIGN. HIGH QUALITY FABRICATED ALUMINIUM SIGNCASE, FINISHED RAL 7016 ANTHRACITE GREY SIGN PANEL IS POLYCARBONATE WITH SCREEN-PRINTED 5 COLOUR FOIL LOGO. SIGNS ARE FULLY INTERNALLY ILLUMINATED BY LED'S

PANTONE	CMYK EQUIVALENT	AV. CANDELAS (PER sq.m.)	Allowance +/-
1. Pantone® 1235	00C 17M 90Y 00K	92	10%
2. Pantone® 021	00C 56M 100Y 00K	60	12%
3. Pantone® Warm Red	00C 79M 100Y 00K	28	12%
4. Pantone® 287	100C 69M 00Y 11K 72C 00M	2.2	5%
5. Pantone® 638	8Y 00K	15	5%
6. White		108	5%
		50.86	

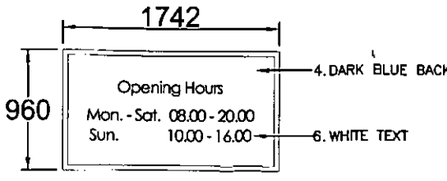

DOUBLE FACED TOTEM MOUNTED SIGN. HIGH QUALITY FABRICATED ALUMINIUM SIGNCASE, FINISHED RAL 7016 ANTHRACITE GREY SIGN PANEL IS POLYCARBONATE WITH SCREEN-PRINTED 2 COLOUR FOIL LOGO. SIGNS ARE FULLY INTERNALLY ILLUMINATED BY LED'S

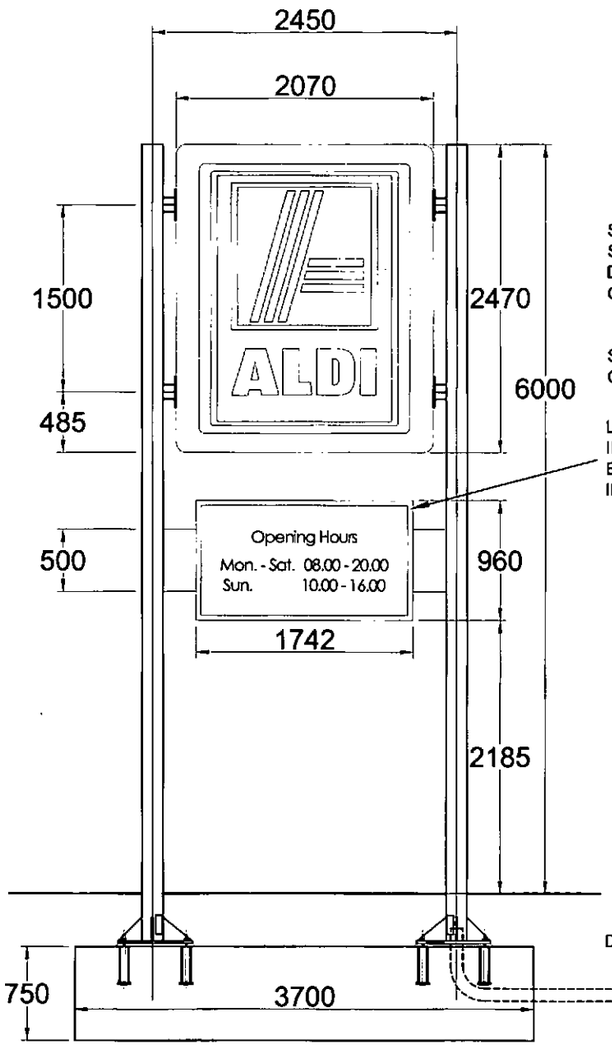

SIGNAGE STEELWORK TO BE TO STRUCTURAL ENGINEERS DESIGN AND DETAILS - TO BE PAINTED ANTHRACITE GREY RAL 7016.

SIGNAGE CENTRAL SUPPORT BOX COLOUR ANTHRACITE GREY RAL 7016.

LOWER SHOWCASE SIGN, INTERNALLY ILLUMINATED BY LED's. BESPOKE TO INDIVIDUAL STORE INDICATING OPENING HOURS

DUCTING FOR ELECTRICAL CABLE

CONCRETE BASE TO STRUCTURAL ENGINEERS DETAIL/DESIGN

ELEVATION

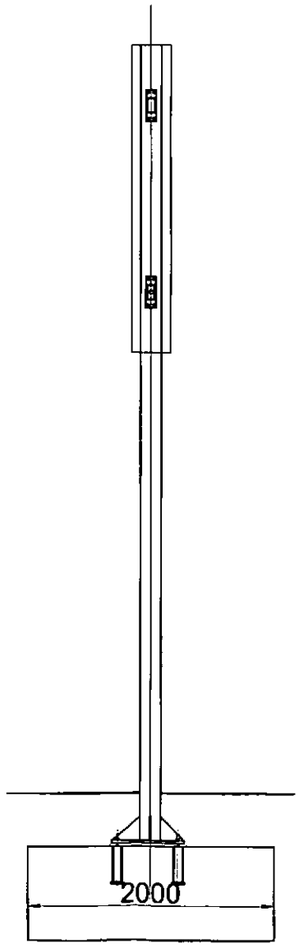

SECTION

SUPPLY CABLE TO BE CONNECTED TO SIGNAGE. CABLES BY ELECTRICAL CONTRACTOR.

NO CABLES OR JUNCTION BOXES TO BE VISIBLE ABOVE GROUND LEVEL OR FIXED TO SIGN

PLANNING AND BUILDING CONTROL
23 NOV 2011

Revisions	- --/--/--
Project Title	PROPOSED FOODSTORE DEVELOPMENT FALLOWFIELD TRIANGLE MANCHESTER
Client	ALDI STORES LTD
Status	PLANNING (ADVERTISEMENT)
Scale	1:50 — Drawing Size A3
Drawn By	PDP — Checked By CIM — Date 28-10-11
Drawing Title	TOTEM SIGN DETAILS
Job-Dwg No.	0236-MID-1003 — Rev -

THE HARRIS PARTNERSHIP MANCHESTER
Canvas Warehouse, 77 Dale Street, Manchester M1 2HG
t. 0161 238 8555 f. 0161 244 5809

THE HARRIS PARTNERSHIP WAKEFIELD
2 St. Johns North, Wakefield, WF1 3QA
t. 01924 291 800 f. 01924 290 072

THE HARRIS PARTNERSHIP MILTON KEYNES
The Old Rectory, 79 High Street Newport Pagnell, MK16 8AB
t. 01908 211 577 f. 01908 211 722

THE HARRIS PARTNERSHIP READING
101 London Road, Reading, RG1 5BY
t. 0118 950 7700 f. 0118 956 8642

THE HARRIS PARTNERSHIP ARCHITECTS
www.harrispartnership.com

CAD file reference J:\PROJECTS\0236-MID\17.0\17.1\1000 SERIES