Proposed Signage



650mm o/all panel length

600mm o/all panel height

1 OFF INTERNALLY ILLUMINATED PROJECTING SIGN - *Scale 1:10*

*Extruded aluminium box with folded 14swg 2mm aluminium face panels with 25mm returns, powder coated white. Logo stencil cut and inlaid with opal acrylic with applied green (**Ref: Avery 4516TF**) vinyl detail. Internally illuminated via fluorescent tubes.*

5070 mm length.

25mm Upstand

515mm ht.

25mm Upstand

32 199

The co-operative pharmacy

560mm o/all ht.

1 OFF PART INTERNALLY ILLUMINATED FASCIA SIGN with M3 LETTERS - *Scale 1:20*

*Folded aluminium panels with 80mm returns, powder coated green to match Pantone 564c with a semi matt finish. Face panel stencil cut and backed up with text '**co-operative**' letters being moulded from silver acrylic with silver edges and applied colbolt blue (**Ref: Ultramark 5750**) vinyl reduced faces showing 3mm silver keyline all fitted over opal acrylic on 12mm spacers, giving a halo effect.*
*All other text '**The**' (preceding '**co-operative**') to be stencil cut and step inlaid with 8mm opal 050 acrylic faced with colbolt blue (**Ref: Ultramark 5750**) vinyl and text '**pharmacy**' to be step inlaid with 8mm opal 050 acrylic. Internally illuminated via fluorescent tubes.*

The co-operative

Drawing Information

Client:
Co-op Pharmacy
Address:
23 Bowland Rd,
Baguley
Manchester M23 1JP
Drawing Number:
08-2901
Drawn By:
TB
Saved as:
J:cooppharmacy/5574/08-2901/manchester
Date:
15/04/08
Scale:
A3
Notes:

PLANNING
ACK'D
REPLIED
RECD 22 MAY 2008
ACTION

Revision:

FASCIA SECTION DETAIL
Scale NTS

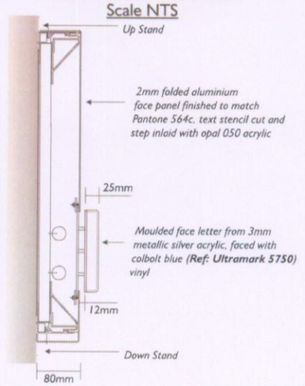

Approved:	Date :	Revision :

NOTE: ALL DIMENSIONS & DETAILS ARE APPROXIMATE & SHOULD BE VERIFIED WITH SITE SURVEY.

BLAZE NEON LTD
UNIT 3 - 4 ARDEN PARK, ARDEN ROAD,
FRANKLEY, BIRMINGHAM. B45 0JA
Tel: +44 (0)121 457 7715 Fax: +44(0)121 453 9355
www.blazeneon.com e-mail: design@blazeneon.com

THE COPYRIGHT OF THIS DRAWING IS OWNED BY BLAZE NEON LIMITED AND IS NOT TO BE DISCLOSED TO OTHER PERSONS OR TO BE USED FOR MANUFACTURING PURPOSES WITHOUT PERMISSION.