SECTION 3A

DETAIL 3A1
RAISED PLANTING BED EDGING
1:20

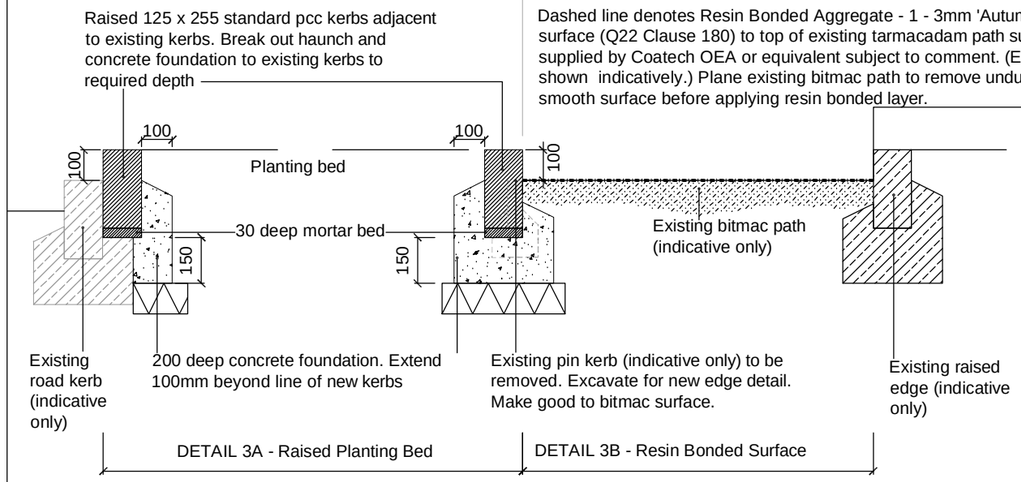

DETAIL 3A2
RESIN BONDED TREATMENT ON EXISTING BITMAC PATH
1:20

Dashed line denotes Resin Bonded Aggregate - 1 - 3mm 'Autumn Gold' aggregate surface (Q22 Clause 180) to top of existing tarmacadam path surfacing; as supplied by Coatech OEA or equivalent subject to comment. (Existing surfacing - shown indicatively.) Plane existing bitmac path to remove undulations to leave a smooth surface before applying resin bonded layer.

SECTION 3B

DETAIL 3B1
RAISED PLANTING BED EDGING
1:20

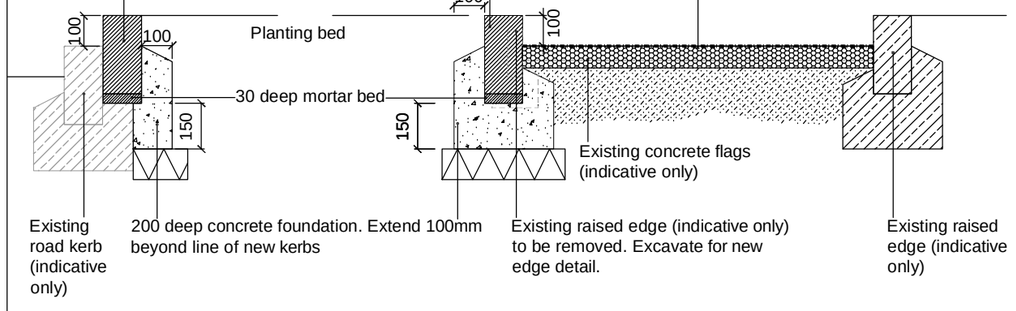

DETAIL 3B2
RESIN BONDED TREATMENT ON EXISTING CONCRETE FLAG SURFACE
1:20

Dashed line denotes Resin Bonded Aggregate - 1 - 3mm 'Autumn Gold' aggregate surface (Q22 Clause 180); as supplied by Coatech OEA or equivalent subject to comment. (Existing surfacing - shown indicatively.) Lift concrete paving flag surface and bedding material. Excavate to 70mm below planed level of adjacent bitmac path as required. Existing sub base to be compacted (add DOT 1 as required) before applying 70 deep dense bitmac layer(to finish level with adjacent planed bitmac surface. Resin Bonded layer to finish.

SECTION 3C

DETAIL 3C1
RESIN BOUND GRAVEL ON FULL BITMAC CONSTRUCTION
1:20

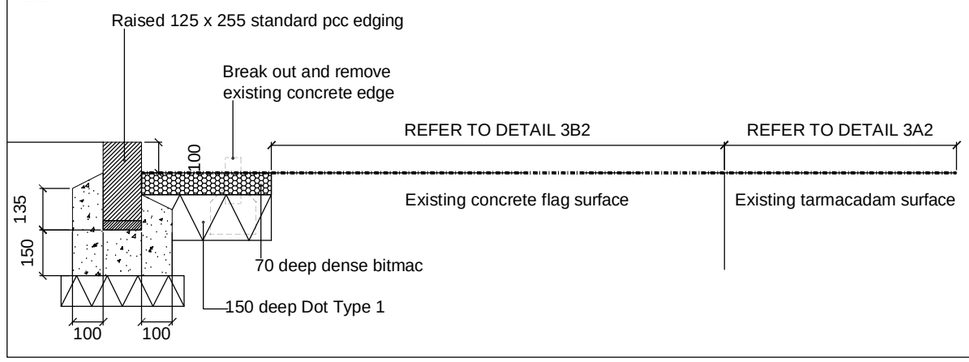

PART PLAN 1:100
Vehicular and pedestrian entrance to Cornbrook off City Road
Refer to General Arrangement drawing (10.539-3-102)

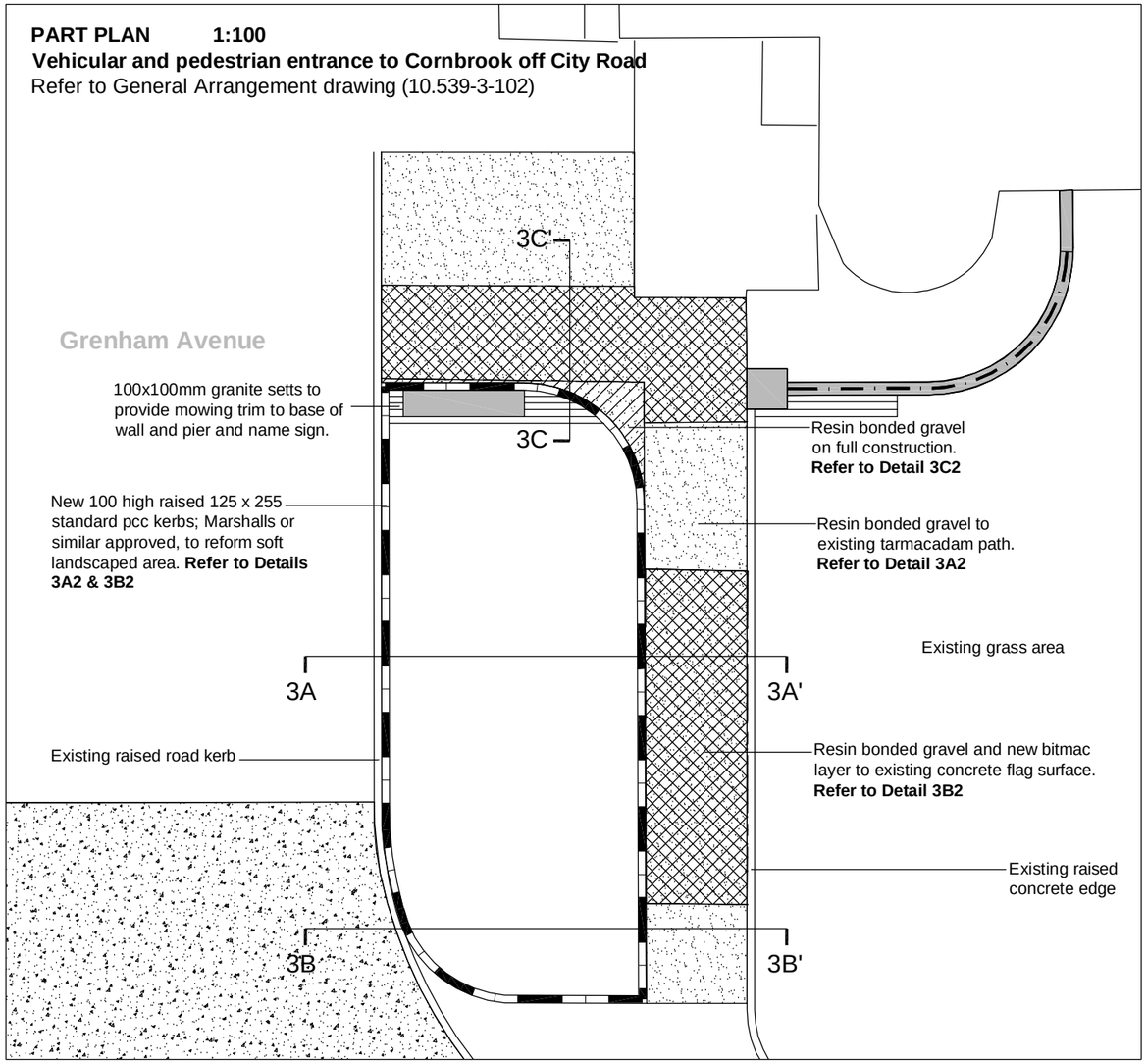

PLANNING ISSUE

City South Manchester Ref: cs35931

Client	CITY SOUTH MANCHESTER	Scale	Drawn	Checked	Date
		as shown@A3	HR	MO'C	31.10.2011
Job title	ENVIRONMENTAL IMPROVEMENTS - CITY ROAD CORNBROOK	Job number	Drawing number		Issue
Drawing title	ENTRANCE DETAILS 01 - EDGINGS & RESIN BONDED TREATMENT	10.539	3-120		

All drawings to be read in conjunction with the Landscape NBS Specification and all works to be carried out in accordance with latest British Standards/codes of practice unless specifically directed otherwise.
Discrepancies and/or ambiguities between this drawing and information given elsewhere must be reported immediately to this office for clarification before proceeding.

19 OLD HALL STREET
LIVERPOOL
L3 9JQ
TELEPHONE +44 (0)151 242 6161
FACSIMILE +44 (0)151 236 4467
EMAIL office@bcalandscape.co.uk
WEB SITE www.bcalandscape.co.uk

BCA Landscape