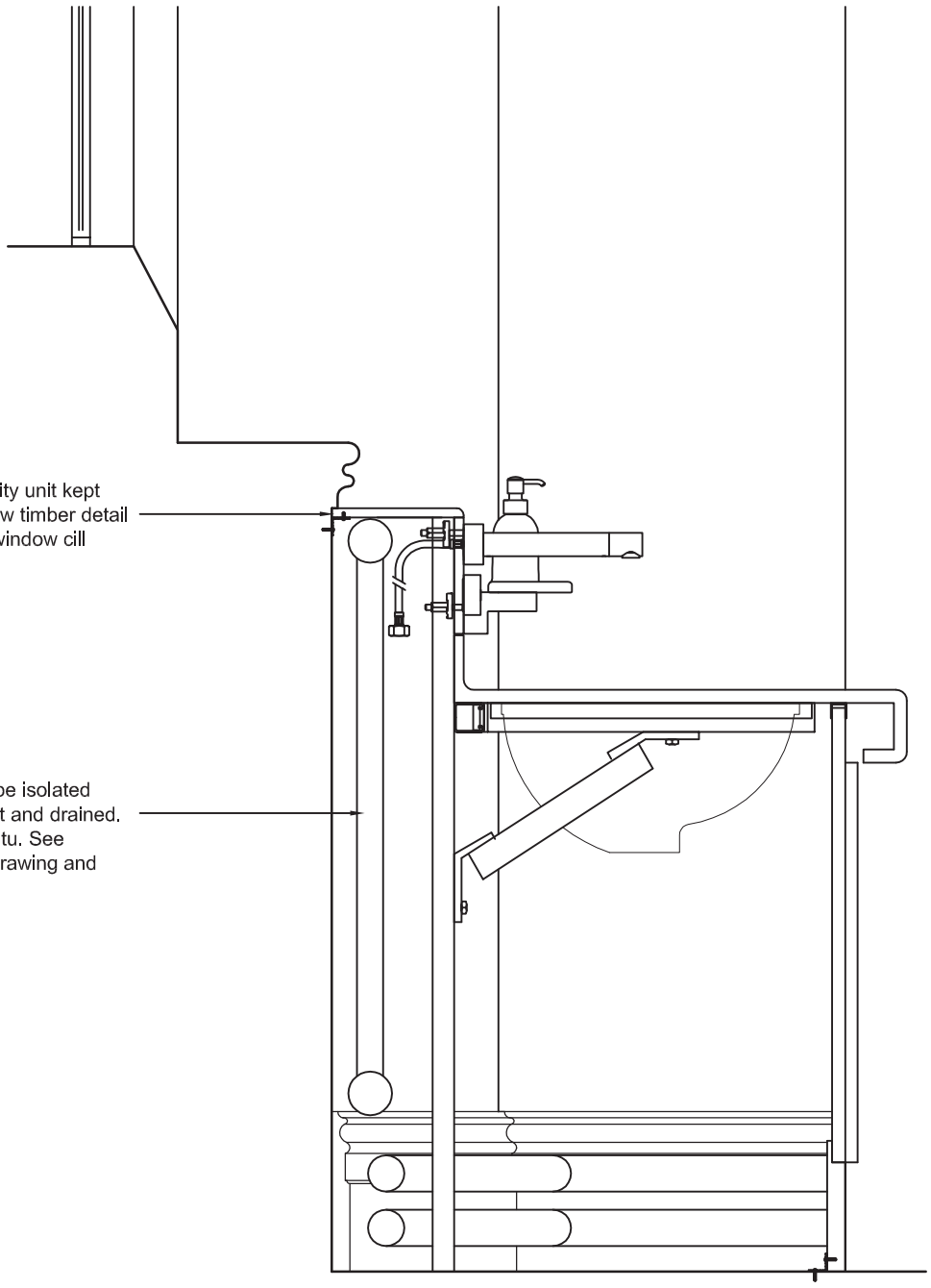

The University of Manchester

MANCHESTER 1824

Directorate of Estates
Beyer Building
The University of
Manchester Oxford Road
Manchester
M13 9PL

Tel. 0161 275 7280
Fax. 0161 275 3880

Rev	Description	By	Date	Chk'd	Auth
-					

Drawing Status: PLANNING

Project: CREATION OF TOILET FACILITY

Building Name: WHITWORTH HALL

Site Name: OXFORD ROAD

Drawing Title: SECTION THROUGH VANITY UNIT

PM	Drawn	Checked	Authorised
JH	CT	--	--
Scale	Date	Date	Date
1:10 @A4	01/03/13	--/--/--	--/--/--

Drawing No.: 005AA-5822-A104

Revision: –