

HEALTH AND SAFETY CONSIDERATIONS
Ref 03 - Live Services - Unknown Services
Please refer to TADW Significant Hazards (Construction) 03 Dated 28 July 2011

HEALTH AND SAFETY CONSIDERATIONS
Ref 04 - Construction works / site traffic / public interface close to boundaries
Please refer to TADW Significant Hazards (Construction) 04 Dated 28 July 2011

HEALTH AND SAFETY CONSIDERATIONS
Ref 05 - Hazards associated with working alongside supermarket contractor, including variable boundary before and after demolition
Please refer to TADW Significant Hazards (Construction) 05 Dated 28 July 2011

HEALTH AND SAFETY CONSIDERATIONS
Ref 06 - Limited site available for construction of first floor overhang at road junction - reduced visibility may ensue for road users
Please refer to TADW Significant Hazards (Construction) 06 Dated 28 July 2011

HEALTH AND SAFETY CONSIDERATIONS
Ref 07 - Location of new boundary of corner of site to avoid services
Please refer to TADW Significant Hazards (Construction) 07 Dated 28 July 2011

HEALTH AND SAFETY CONSIDERATIONS
Ref 08 - Passing pedestrian traffic going to and from nearby school, shops and library
Please refer to TADW Significant Hazards (Construction) 08 Dated 28 July 2011

HEALTH AND SAFETY CONSIDERATIONS
Ref 09 - Existing site hazards
Please refer to TADW Significant Hazards (Construction) 09 Dated 28 July 2011

FENCE TYPE 1 - For first Panel of house

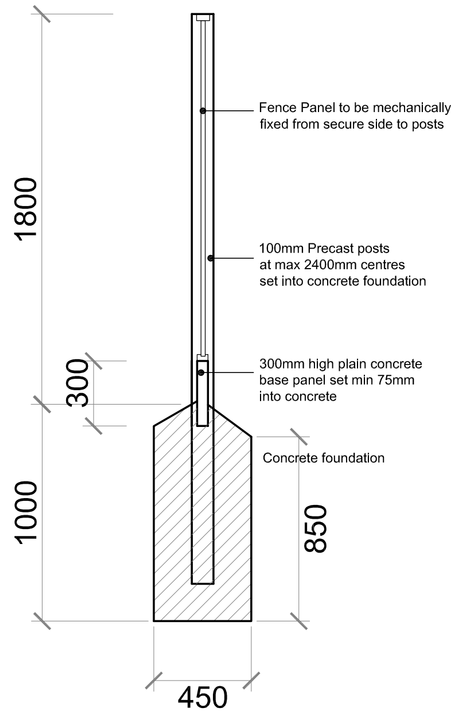

FENCE TYPE 1 - With Trellis

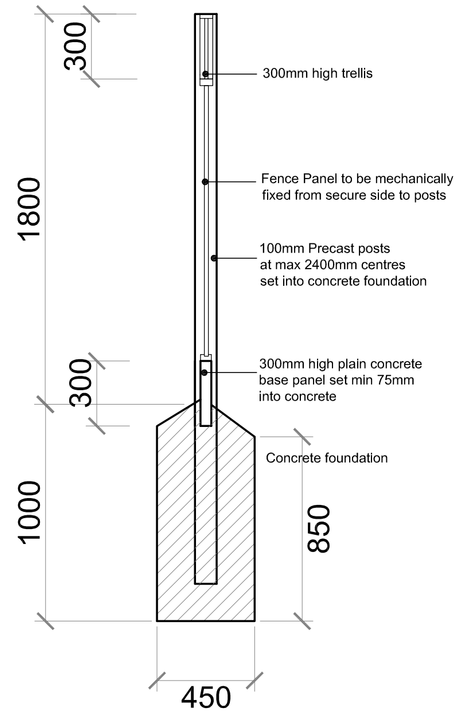

FENCE TYPE 2

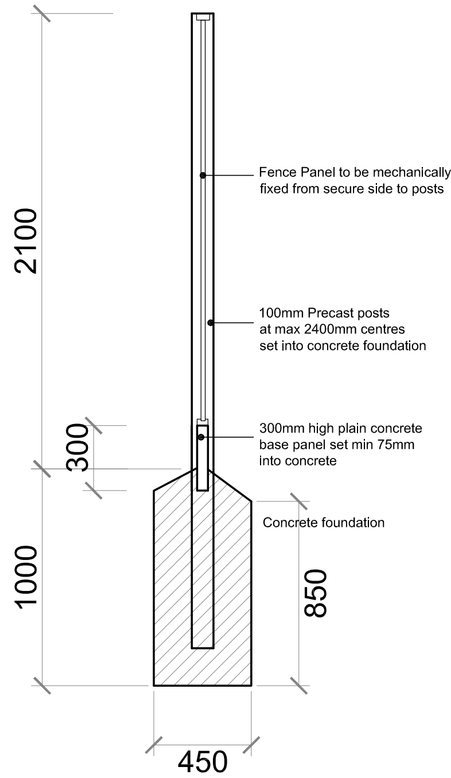

FENCE TYPE 3

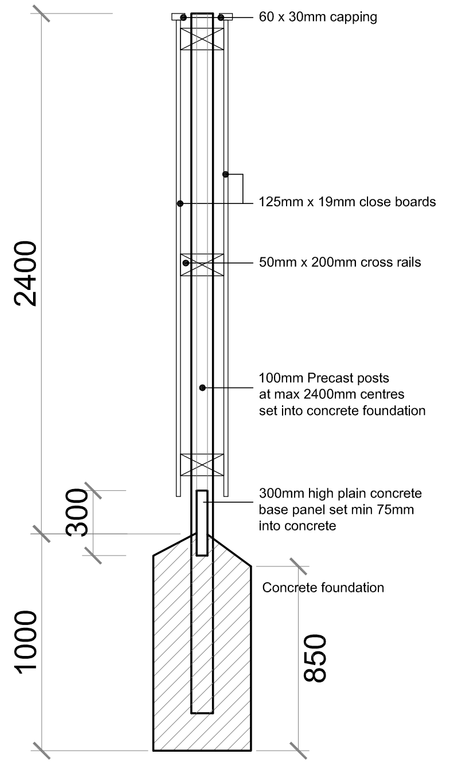

FENCE DETAILS
SCALE 1:20

GENERAL NOTES

1. Dimensions must not be scaled from this drawing. If in doubt, please ask.
2. All dimensions are in millimetres unless noted otherwise.
3. All dimensions should be verified on site before proceeding with the work.
4. TADW Architects shall be notified in writing of any discrepancies.
5. Copyright to remain the property of TADW Architects in accordance with the Copyright, Designs and Patents Act 1988.

LEGEND

Wall Type 1

Bin Store Wall
2800mm high Brickwork Wall to Bin Store
Please refer to TADW drawing 80927-132 for setting out and details
(please refer to planter details also)

Wall Type 2

Boundary Wall to Flat amentity space and drying area
2127mm high Brickwork Wall
Please refer to TADW drawing 80927-132 (Wall Type 2) for details

Wall Type 3

Low Level Boundary Wall to Flats and Houses
1200mm high Brickwork Wall upto 478mm and railings
Please refer to TADW drawing 80927-132 (Wall Type 3) for details
for details

Wall Type 4 - Between Plot 2 and 3

Low Level railings (no brickwork wall under)
1200mm high

Wall Type 5 - To Boundary of Plot 1/ Car Park and Rectory

2128mm high brickwork boundary wall
Refer to drawing 133 for details and setting out

Wall Type 6 - To Boundary of Plot 1 and Rectory

2100mm high railings
Refer to drawing 133 for details and setting out

Fence Type 1 - Refer to detail Fence Type 1

To Sub Division Boundaries / Rear of houses
1800mm high close boarded timber fence to first section of wall closest to house
1200m high timber fence topped with 600mm of timber trellis to an overall hieght of 1800mm to all other areas

Fence Type 2 - Refer to detail Fence Type 2

To Fences between houses facing Hart Road
2100mm high close boarded timber fence with 1800mm high gates as shown with 300mm trellis over

Fence Type 3 - Refer to detail Fence Type 3

To Boundary of Plot 1, Rectory and ALDI
2400mm high close boarded timber fence to both sides

Please note this drawing is to be read in in conjunction with SBD New Homes 2010 Sections 10 and 13, and to be agreed with Design For Security.

ISSUE	DESCRIPTION	Date	Drawn	Checked
C2	FENCE TYPE 5 REDUCED AND FENCE TYPE 6 ADDED,	14.12.11	PLG	GN
C1	BIN STORE AMENDED, ENTRANCE GATES SHOWN, FENCES AMENDED ALL AS REQUESTED BY SOUTHDALE	07.11.11	PLG	GN
P1	DRAWN FOR COMMENTS	10.10.11	PLG	GN

DRAWING STATUS
P - PLANNING, T - TENDER, C - CONSTRUCTION, R - AS RECORD

FOR CONSTRUCTION

TADW ARCHITECTS
6 St. Petersgate
Stockport
Cheshire
SK1 1HD
Tel: 0161 477 6158
Fax: 0161 480 8342
Email: mail@tadw.co.uk
www.tadw.co.uk

Client: SOUTHDALE FOR GREAT PLACES HOUSING GROUP

Job: HART ROAD, FALLOWFIELD, MANCHESTER

Title: **SITE PLAN AS PROPOSED SHOWING BOUNDARY TREATMENTS**

Scale: 1:200, 1:20 @ A1, 1:400, 1:40 @ A3

Job Number	Drawing Number	issue
80927	**131**	**C2**