DO NOT SCALE FROM DRAWING. ALL DIMENSIONS TO BE CHECKED ON SITE

THE COPYRIGHT FOR THESE DRAWINGS REMAINS THE PROPERTY OF THE ADACTUS HOUSING ASSOCIATION LTD, THEY MUST NOT BE REPRODUCED IN ANY WAY WITHOUT THE ASSOCIATION'S PRIOR WRITTEN CONSENT.

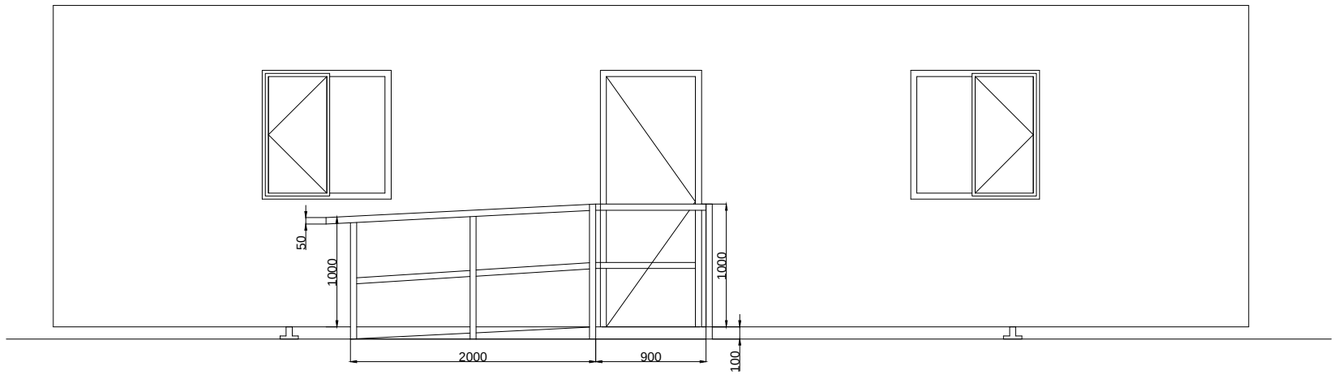

Proposed elevation of Cabin and Ramp.

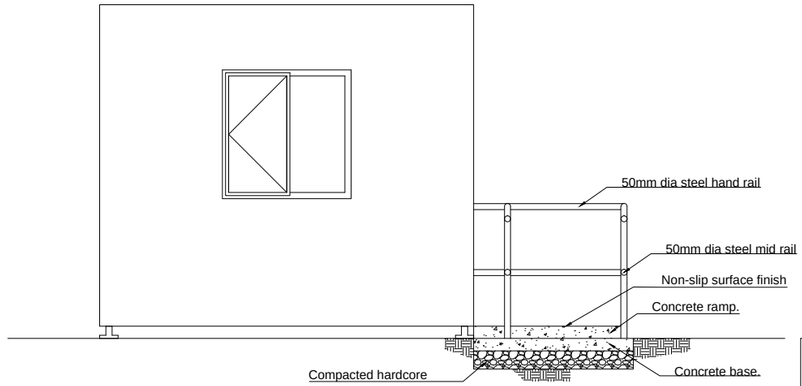

Section A-A through Cabin and Ramp

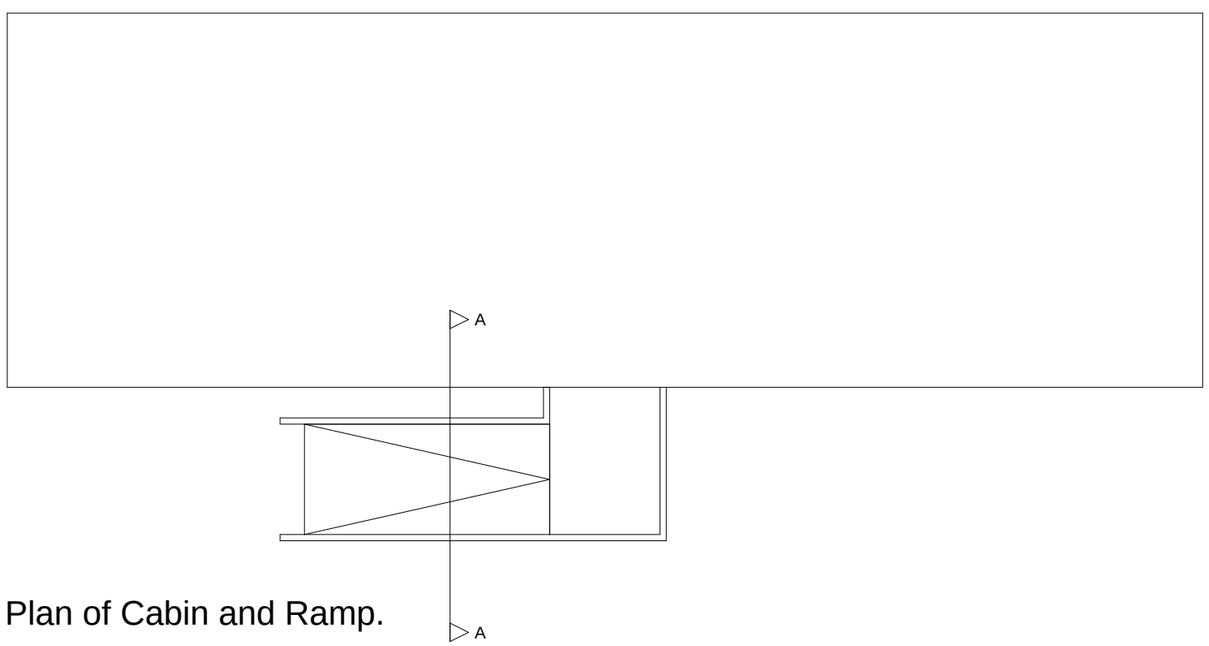

Plan of Cabin and Ramp.

ADACTUS HOUSING ASSOCIATION LTD
TURNER HOUSE
56 KING STREET
LEIGH
LANCASHIRE
WN7 4LJ.

PROJECT

PROPOSED PORTABLE COMUNITY BUILDING.

DRAWING TITLE

Keeley Close Cabin and Ramp.

Rev.	Notes	Date	Drawn
A	Proposed Ramp	20.12.2012	ADB

SCALE		
1:50@ A3	20.12.2012	ADB

PROJECT No.	DRAWING No.	Rev.
0101	01	A