Solar Powered Telephone Kiosk (with wheelchair access)

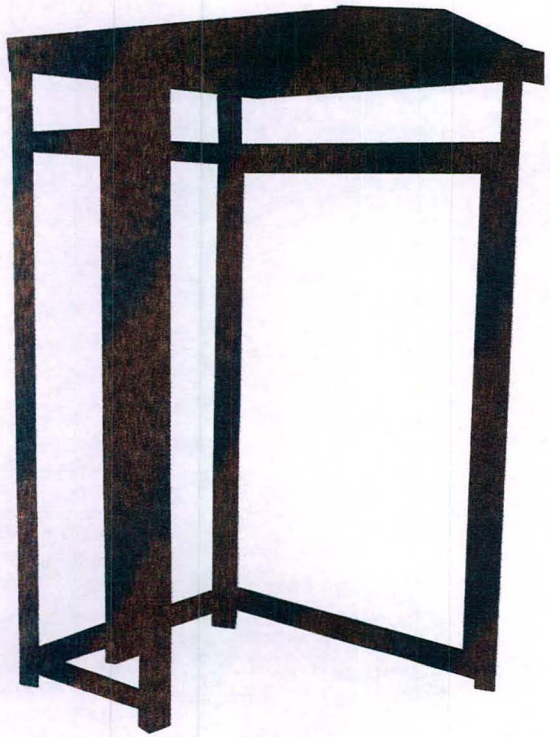

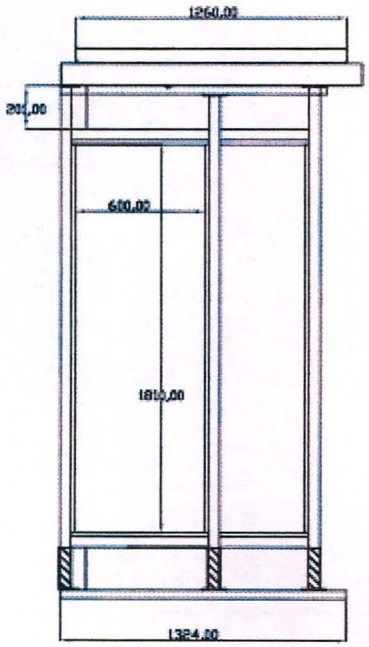

LEFT SIDE VIEW

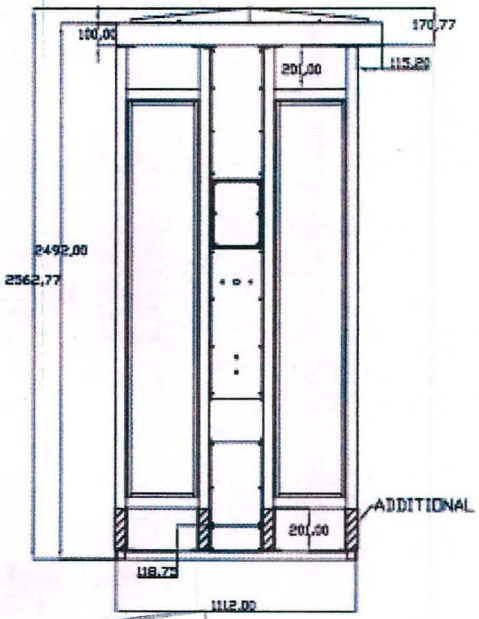

FRONT VIEW

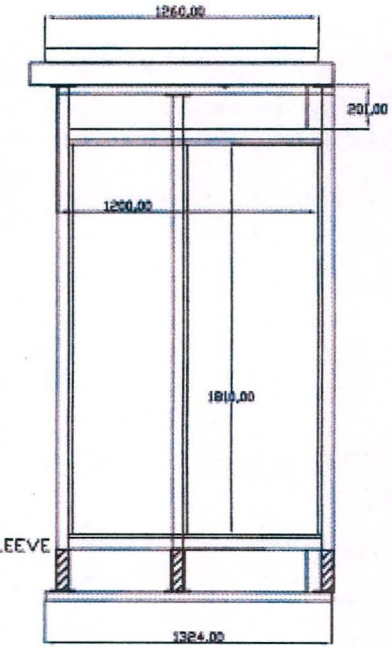

RIGHT SIDE VIEW

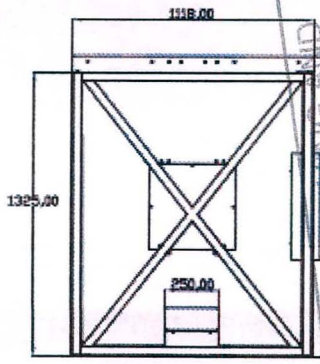

BOTTOM VIEW

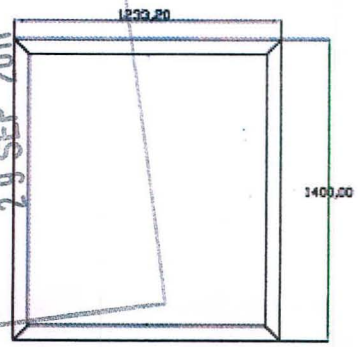

TOP VIEW

PLANNING AND BUILDING CONTROL
29 SEP 2011

Steel Frame
Colour Pillar Black

Clear Polycarbonate
Toughened Glass 8mm

Infocus Public Networks