DO NOT SCALE: CONTRACTOR TO CHECK ALL DIMENSIONS AND REPORT ANY OMISSIONS OR ERRORS

NOTES

1. THIS DRAWING IS TO BE READ IN CONJUNCTION WITH ALL WYG ENGINEERING AND HILSON MORAN DRAWINGS AND SPECIFICATIONS.
2. REFER TO M&E LAYOUTS FOR FINAL PIPE POSITIONS

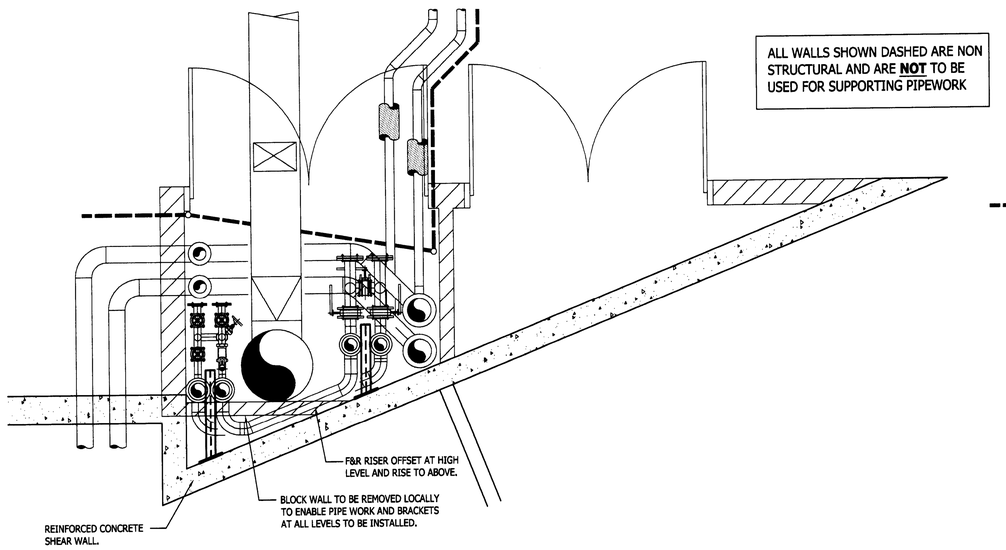

TOWER BUILDING RISER FIFTH FLOOR OFFSET
SCALE 1:20

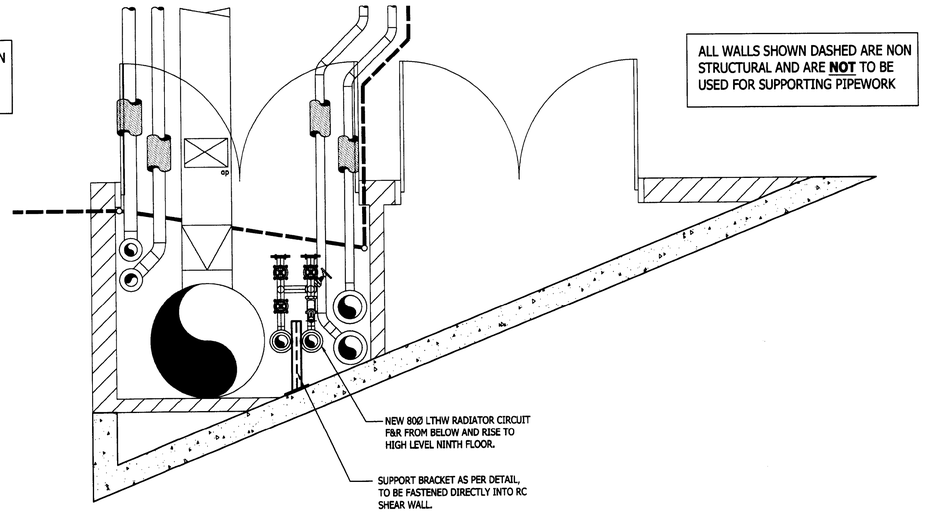

TOWER BUILDING RISER SIXTH TO NINTH FLOOR
SCALE 1:20

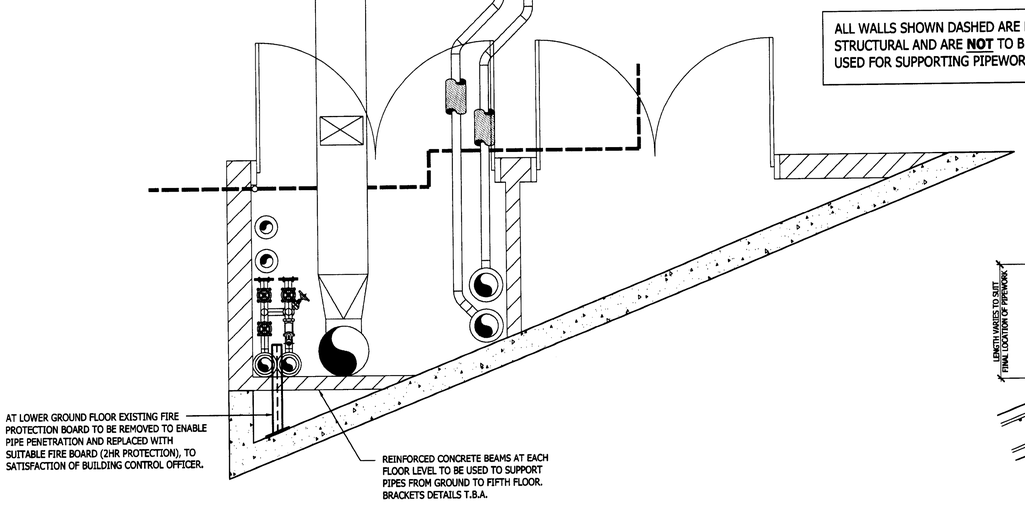

TOWER BUILDING RISER GROUND TO FIFTH FLOOR
SCALE 1:20

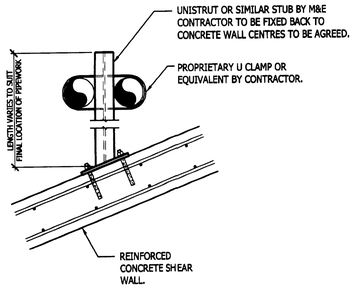

PLAN ON PIPEWORK SUPPORT - LEVEL 5-9
SCALE 1:10

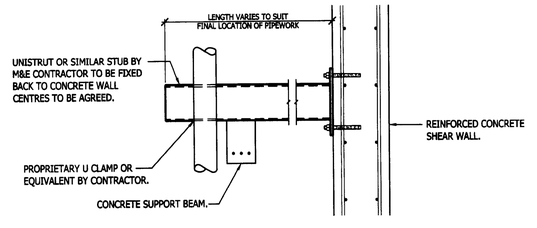

SECTION ON PIPEWORK SUPPORTS LOWER GROUND TO LEVEL 5
SCALE 1:10

NOTES

1. STUBS TO BE PROVIDED BY M&E CONTRACTOR.
2. MIN 4No FIXINGS INTO CONCRETE MIN 150mm EMBEDMENT USING HILTI HIT-HY150 RESIN. DIAMETER OF FIXING TO SUIT RESTRAINT CENTRES, MIN M10 BOLTS.
3. CONTRACTOR TO ENSURE INTERMEDIATE RESTRAINTS BETWEEN FLOOR LEVELS ONLY RESIST LATERAL FORCES. ALL VERTICAL LOADS TO BE RESISTED AT EACH FLOOR LEVEL.

REV	DESCRIPTION	BY	CHK	APP	DATE
T1	TENDER ISSUE	PD	AMc	LB	15.07.09

REGATTA HOUSE
CLIPPER QUAY
SALFORD QUAYS
MANCHESTER
M50 3XP
TEL: +44 (0)161 872 3223
FAX: +44 (0)161 872 3183
e-mail: manchester@wyg.com

PLANNING
RECD
REPLIED
RECD 15 DEC 2009

Project:
PALL MALL COURT, 67 KING ST, MANCHESTER
LTHW RADIATOR PIPEWORK REPLACEMENT
PHASE 1

Drawing Title:
BUILDERS WORK DETAILS IN RELATION TO M&E INSTALLATION WITHIN RISER B

Scale @ A1	Drawn	Date	Checked	Date	Approved	Date
AS SHOWN	PD	July'09	AMc	July'09	LB	July'09

Project No.	Office	Type	Drawing No.	Revision
A037491	27	CS	(38) D001	T1

© WYG Group Ltd.