1# new SUBWAY double sided blade sign

two 2mm folded aluminium trays back to back with welded and dressed corners powder coated green PMS 2426. punched holes through returns for fixings with M4 machine screws to insert nuts set into steelwork. trays stencil cut and backed with 10mm custom light sheet with semi translucent white vinyl to face of light sheet, behind WAY and yellow translucent vinyl to face of lightsheet behind SUB to match Pantone 7549c when lit. light sheets fixed to rear of trays with M4 CD weld studs nuts and washers. bracket in 8mm mild steel back plate welded to 8mm mild steel blade to form T. 25mm x 3mm frame welded to bracket to include a 25mm x 3mm steel brace welded between diagonal corners. 6# 10mm through holes for M8 mechanical anchors to backplate and all of bracket coated black RAL 9005. white vinyl ®s face applied to trays. power supply concealed outside sign with electrical feed to exit sign at top into black mini conduit then through backplate.

face elevation @ 14%



plan elevation @ 14%

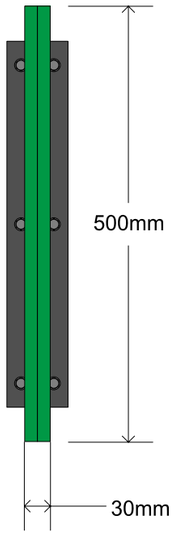

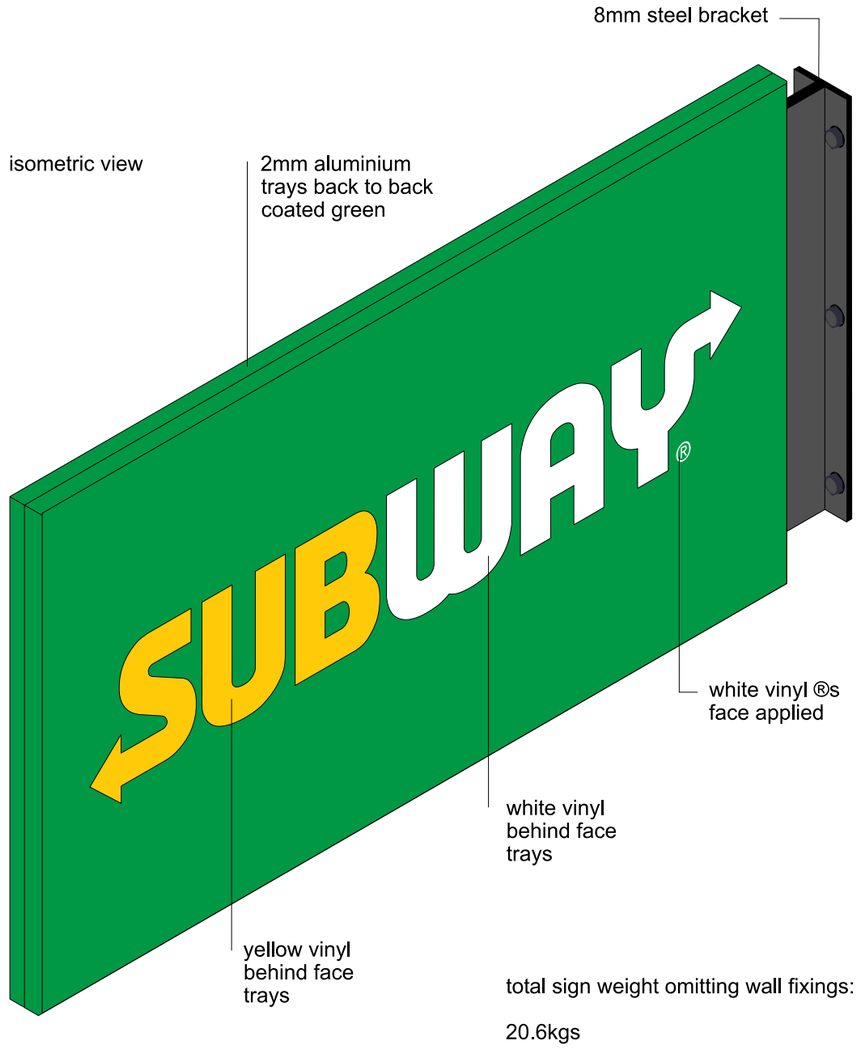

end elevation of proposed signage - @1.5%

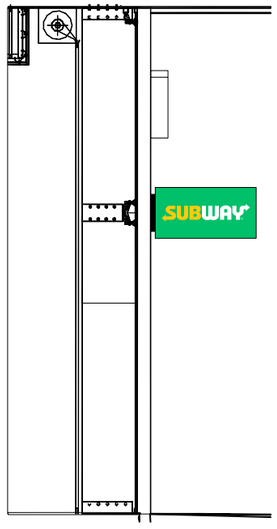

partial section - @100%

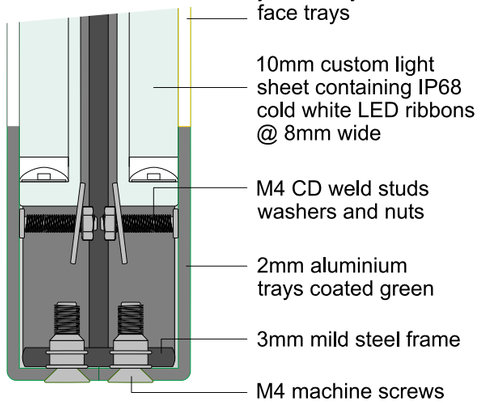

total sign weight omitting wall fixings:

20.6kgs

www.ivcsigns.co.uk

CUSTOMER/SITE: Subway, Piccadilly Approach, M1 2WA			PROJECT: illuminated projecting sign
JOB Nr: M-2793-2D	SCALE: 14%	PAGE SIZE: A3	PAGE Nr: 3 — all dimensions are in mm unless otherwise stated

REV		DATE	DRAWN BY
A	Manufacture	01 12 16	WSA
B	Manufacture	02 12 16	WSA
C	Manufacture	13 12 16	WSA
D	Manufacture	25 01 17	WSA

Copyright IVC Signs Ltd. No part of this drawing may be copied or reproduced without the express written permission of IVC Signs Ltd.