Redvision™



Full HD 1080p

RV30-1080 HD Series

The RV30-1080 HD rugged PTZ and dome series is a high-quality, Full HD, IP camera range. It is designed and manufactured in the UK by Redvision and is ideally suited to tough, outdoor surveillance applications.

The RV30-1080 HD series uses an advanced 1/2.8" CMOS image sensor, with wide dynamic range (WDR) and exceptional low-light performance. It produces three video streams of up to Full HD, 1080p (1920x1080 pixels) resolution at 25 FPS, in a choice of H.264, MPEG4 and JPEG compression formats. It has a 30x optical zoom, with 12x digital zoom, and a sensitivity of 0.35 Lux in daylight mode and 0.05 Lux at night in Infra-Red (IR) mode.

The RV30-1080 HD series has options for IR or Dual Light (combined IR and white light) illumination, using its built-in, ultra-efficient LEDs. Night time IR illumination is effective up to 120 metres and white light is effective up to 100 metres with both providing facial recognition at up to 40 metres. The IR lighting allows covert operation, whilst the white light option produces usable colour images at night and acts as an overt, visible warning to intruders.

The RV30-1080 HD cameras provide seamless, network integration. They are ONVIF S compliant, as well as having SDK integration with most leading manufacturers control equipment or video management software.

The RV30-1080 HD series has a flat, optically-correct, toughened glass camera window for image clarity. The cameras can see above the horizon in dome configuration, eliminating video clipping. A wiper option is available, with blades made of specialist silicone for long life operation.

The RV30-1080 HD range is available in light grey or black as standard, or to order in any RAL colour or marine finish. There is a wide range of mounting and bracket options to suit all applications and each camera has 100 pre-sets, 8 tours, 16 alarm contacts and up to 24 privacy masks.

RV30-1080 Series Product Codes



Product Code (W: Wiper G: Light Grey B: Black)	Product Description
RV30-1080-G	30:1 HD1080P PTZ DOME, LIGHT GREY
RV30-1080-W-G	30:1 HD1080P PTZ DOME, WIPER, LIGHT GREY
RV30-1080-B	30:1 HD1080P PTZ DOME, BLACK
RV30-1080-W-B	30:1 HD1080P PTZ DOME, WIPER, BLACK



RV30-1080-IR-G	30:1 HD1080P PTZ DOME, IR, LIGHT GREY
RV30-1080-IR-W-G	30:1 HD1080P PTZ DOME, IR, WIPER, LIGHT GREY
RV30-1080-IR-B	30:1 HD1080P PTZ DOME, IR, BLACK
RV30-1080-IR-W-B	30:1 HD1080P PTZ DOME, IR, WIPER, BLACK



RV30-1080-IRWL-G	30:1 HD1080P PTZ DOME, DUAL LIGHT, LIGHT GREY
RV30-1080-IRWL-W-G	30:1 HD1080P PTZ DOME, DUAL LIGHT, WIPER, LIGHT GREY
RV30-1080-IRWL-B	30:1 HD1080P PTZ DOME, DUAL LIGHT, BLACK
RV30-1080-IRWL-W-B	30:1 HD1080P PTZ DOME, DUAL LIGHT, WIPER, BLACK

ONVIF | The IP-based Security Standard

CE

RV30-1080 HD Series

General Camera Specification

Camera Module	1 / 2.8” CMOS (2 Mpixel effective). 30x Optical, 12x Digital
Lens	63.7 (w) 2.3 (t) 4.3mm to 129mm (F1.6-F4.7)
Sensitivity	0.35 LUX 1 / 30 sec DAY. ICR On Mode 0.05 LUX 1 / 30 sec NIGHT
Focus	Auto/Manual
Privacy	24 programmable patches
Pan/Tilt	Continuous Pan 200/sec, Tilt 100/sec +10° to -90°
Preset/Tours	100 Presets/8 Tours
Alarm	16 NO/NC Alarm contacts via ALARM PSU, Wireless option
Wiper (-W models only)	On/Off/timed/Auto shutoff
Wash	Relay output Via Alarm PSU
Real Time Clock	Auto setting or manual, schedules tours/Alarms
Power	24V DC 3A maximum-via RVIP-PSU module. Input: 100-240V AC 50/60Hz
Operating Temperature	-25° to +60° (NB: black colour +50°)
Weight	5.2kg without Lamps, 5.8kg with Lamps
Colour	RAL 7035 Light Grey, RAL 9005 Black or Custom to special order

Video and Network Specification

Video	Up to 3 simultaneous streams
Primary Stream	1080P/30, 1080P/25, 720P/60, 720P/30, 720P/25
Secondary/Tertiary	1280 x 720, 720 x 576 (D1), 640 x 480 (VGA), 320 x 240 (QVGA)
Compression/stream rate	H.264, MPEG 4, JPEG up to 12Mbps
Latency	Less than 200mSec @ 1080P 25 H.264
Ethernet	10/100BASE-T via RJ-45 in RVIP-PSU
Cable	Up to 100m Cat 5 from Alarm RVIP-PSU, 50m Cat 5 from Standard RVIP-PSU
Protocol	TCP/IP, UPD/IP, RTSP, NTP, HTTP
Security	Login Authentication, IP Address filtering. User access Log
Onvif Conformance	Yes
Operation	Via Web Page, ONVIF, Custom Protocol SDK

Illumination Specification

RV30-1080-IR	IR Illumination up to 120 metres
RV30-1080-IRWL	Dual Light Illumination (IR and White Light) up to 100 metres
Certification	X-SERIES has been CE marked, complies: 2004/108/eec Electromagnetic Compatibility. 73/23/eec Low Voltage Directives. 60950: 2006 Safety Standards. Weatherproof to IP 67.

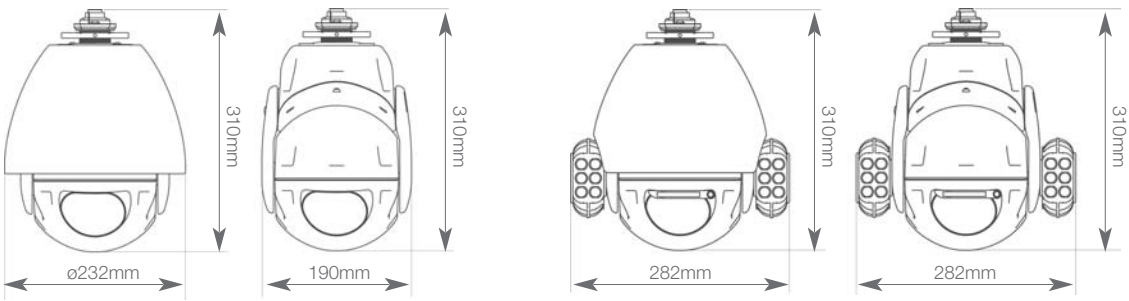

Redvision CCTV Ltd, Alpha House, Blacknest Road, Blacknest, Alton, Hants, GU34 4PX, UK

T +44(0)1420 448448 E sales@redvisioncctv.com www.redvisioncctv.com