ELEMENT 2



1 OFF – SUPPLY AND INSTALL

DIRECT PRINT ONTO 3MM ALUMINUM COMPOSITE, SCREW FIX TO WALL + CAPS

PROPOSED



REMOVE PANATRIM FRAME

ASTRA JOB NUMBER 39663

ACCOUNT MANAGER LM

SCALE 1:10 DRAWN BY CDL

APPROVED FOR PRODUCTION 20/09/16

REV #	DATE	REV #	DATE
1	15/09/16		

Colour Specification

- PMS 7741C
- PMS 424C
- PMS 2301C
- PMS 379C
- PMS 2392C
- 9% BLACK

Print – Specification

- [x] FACE PRINT
- [ ] REVERSE PRINT

CLIENT
THE MANCHESTER COLLEGE

VISUAL
SHENA SIMON SIGNAGE REBRAND

ASTRA SIGNS.COM
Astra Signs Limited I 204 Dantzic Street I Manchester M4 4DD
Tel 0161 832 2429 Email sales@astrasigns.com

DO NOT SCALE FROM THIS DRAWING ALL DIMENSIONS TO BE CHECKED ON SITE PRIOR TO MANUFACTURE

© All rights reserved, including the right to reproduce in whole or in part without the consent of Astra Signs Ltd. This printout is for visual purposes only and not to be used as an exact colour reference.

ELEMENT 4

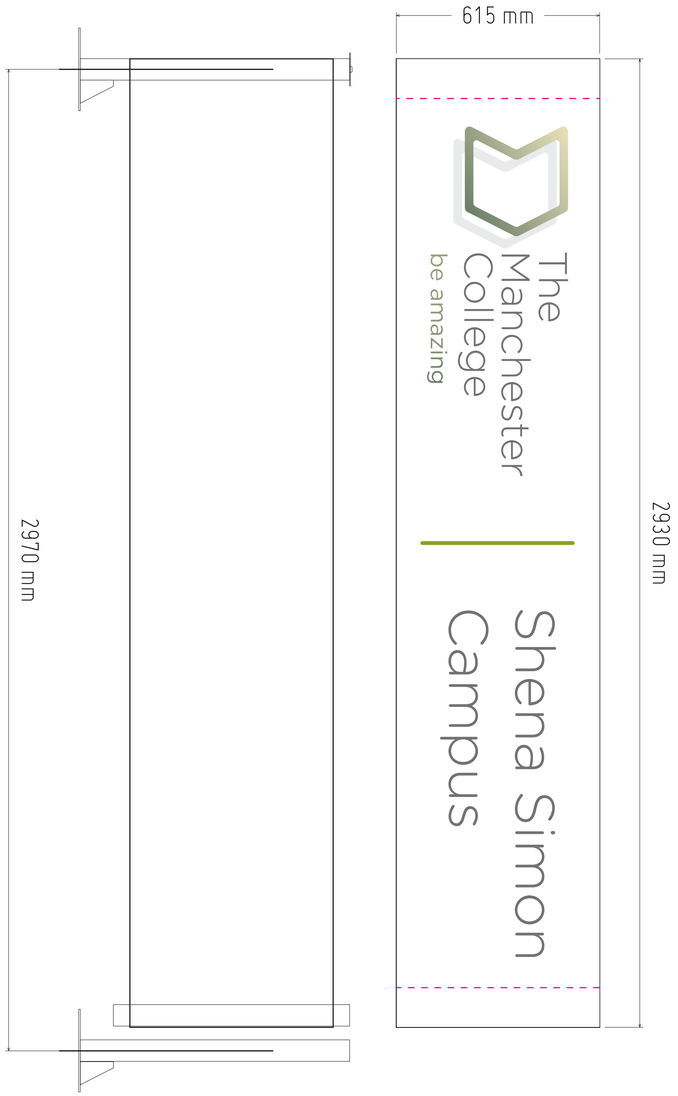

BANNER ARM SPEC

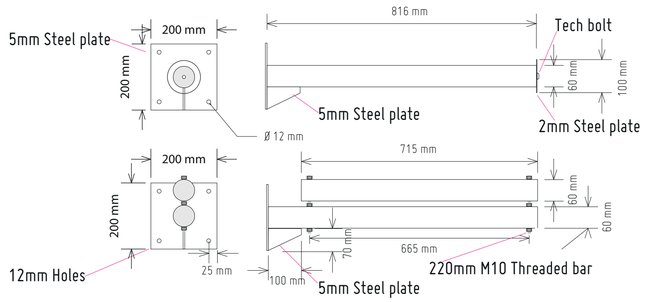

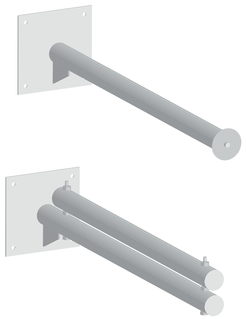

Banner arms are to be fabricated
and painted to ral9016.
They will be taken to site and securely fitted
on the building in the appropriate location.
The distance between the banners arms should be
2970mm to the centres.



1 OFF – SUPPLY AND INSTALL

DIGITAL PRINT ONTO DOUBLE SIDED BANNER MATERIAL SAME IMAGE BOTH SIDES
WITH 120MM POCKET TOP AND BOTTOM
WITH NEW BANNER ARMS

PROPOSED



ASTRA JOB NUMBER 39663

ACCOUNT MANAGER LM

SCALE 1:10 DRAWN BY CDL

APPROVED FOR PRODUCTION 23/09/16

REV #	DATE	REV #	DATE
1	15/09/16		

Colour Specification

PMS 7741C
PMS 424C
PMS 2301C
PMS 379C
PMS 2392C
9% BLACK
RAL 9016

Print – Specification

☑ FACE PRINT ☐ REVERSE PRINT

CLIENT
THE MANCHESTER COLLEGE

VISUAL
SHENA SIMON SIGNAGE REBRAND

ASTRA SIGNS.COM
Astra Signs Limited I 204 Dantzic Street I Manchester M4 4DD
Tel 0161 832 2429 Email sales@astrasigns.com

DO NOT SCALE FROM THIS DRAWING ALL DIMENSIONS TO BE CHECKED ON SITE PRIOR TO MANUFACTURE

© All rights reserved, including the right to reproduce in whole or in part without the consent of Astra Signs Ltd. This printout is for visual purposes only and not to be used as an exact colour reference.

ELEMENT 5

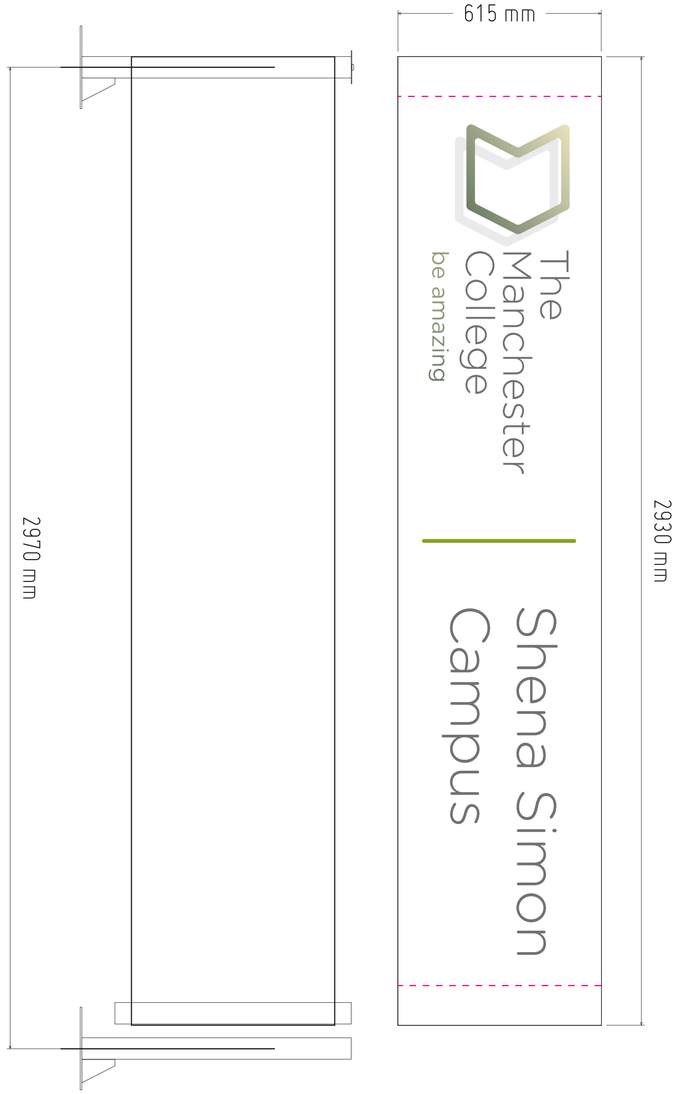

BANNER ARM SPEC

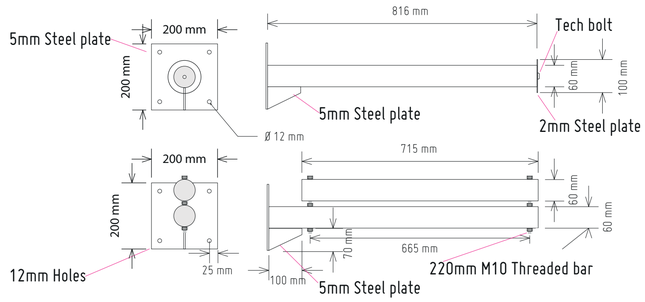

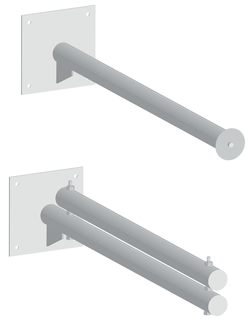

Banner arms are to be fabricated
and painted to ral9016.
They will be taken to site and securely fitted
on the building in the appropriate location.
The distance between the banners arms should be
2970mm to the centres.

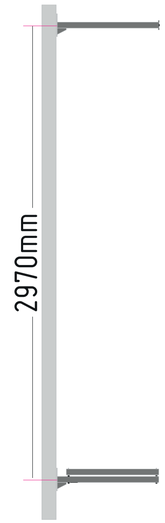

1 OFF – SUPPLY AND INSTALL

DIGITAL PRINT ONTO DOUBLE SIDED BANNER MATERIAL SAME IMAGE BOTH SIDES
WITH 120MM POCKET TOP AND BOTTOM
WITH NEW BANNER ARMS

PROPOSED



ASTRA JOB NUMBER 39663

ACCOUNT MANAGER LM

SCALE 1:10 DRAWN BY CDL

APPROVED FOR PRODUCTION 23/09/16

REV #	DATE	REV #	DATE
1	15/09/16		

Colour Specification

- PMS 7741C
- PMS 424C
- PMS 2301C
- PMS 379C
- PMS 2392C
- 9% BLACK
- RAL 9016

Print – Specification

☑ FACE PRINT ☐ REVERSE PRINT

CLIENT
THE MANCHESTER COLLEGE

VISUAL
SHENA SIMON SIGNAGE REBRAND

ASTRA SIGNS.COM
Astra Signs Limited | 204 Dantzic Street | Manchester M4 4DD
Tel 0161 832 2429 Email sales@astrasigns.com

DO NOT SCALE FROM THIS DRAWING ALL DIMENSIONS TO BE CHECKED ON SITE PRIOR TO MANUFACTURE

© All rights reserved, including the right to reproduce in whole or in part without the consent of Astra Signs Ltd. This printout is for visual purposes only and not to be used as an exact colour reference.

ELEMENT 6



1 OFF – SUPPLY AND INSTALL

DIRECT PRINT ONTO 3MM ALUMINIUM COMPOSITE, SCREW FIXED TO THE WALL + CAPS

PROPOSED



ASTRA JOB NUMBER 39663

ACCOUNT MANAGER LM

SCALE 1:10 DRAWN BY CDL

APPROVED FOR PRODUCTION 20/09/16

REV #	DATE	REV #	DATE
1	15/09/16		

Colour Specification

- PMS 7741C
- PMS 424C
- PMS 2301C
- PMS 379C
- PMS 2392C
- 9% BLACK

Print – Specification

- [x] FACE PRINT
- [ ] REVERSE PRINT

CLIENT
THE MANCHESTER COLLEGE

VISUAL
SHENA SIMON SIGNAGE REBRAND

ASTRA SIGNS .COM
Astra Signs Limited I 204 Dantzic Street I Manchester M4 4DD
Tel 0161 832 2429 Email sales@astrasigns.com

DO NOT SCALE FROM THIS DRAWING ALL DIMENSIONS TO BE CHECKED ON SITE PRIOR TO MANUFACTURE

© All rights reserved, including the right to reproduce in whole or in part without the consent of Astra Signs Ltd. This printout is for visual purposes only and not to be used as an exact colour reference.

ELEMENT 8



1 OFF – SUPPLY AND INSTALL

DIRECT PRINT ONTO 3MM ALUMINIUM COMPOSITE, SCREW FIXED TO THE WALL + CAPS

PROPOSED



ASTRA JOB NUMBER	39663
ACCOUNT MANAGER	LM
SCALE	1:10
DRAWN BY	CDL

APPROVED FOR PRODUCTION 20/09/16

REV #	DATE	REV #	DATE
1	15/09/16		

Colour Specification

- PMS 7741C
- PMS 424C
- PMS 2301C
- PMS 379C
- PMS 2392C
- 9% BLACK

Print – Specification

- [x] FACE PRINT
- [ ] REVERSE PRINT

CLIENT
THE MANCHESTER COLLEGE

VISUAL
SHENA SIMON SIGNAGE REBRAND

Astra Signs Limited | 204 Dantzic Street | Manchester M4 4DD
Tel 0161 832 2429 Email sales@astrasigns.com

DO NOT SCALE FROM THIS DRAWING ALL DIMENSIONS TO BE CHECKED ON SITE PRIOR TO MANUFACTURE

© All rights reserved, including the right to reproduce in whole or in part without the consent of Astra Signs Ltd. This printout is for visual purposes only and not to be used as an exact colour reference.

ELEMENT 10

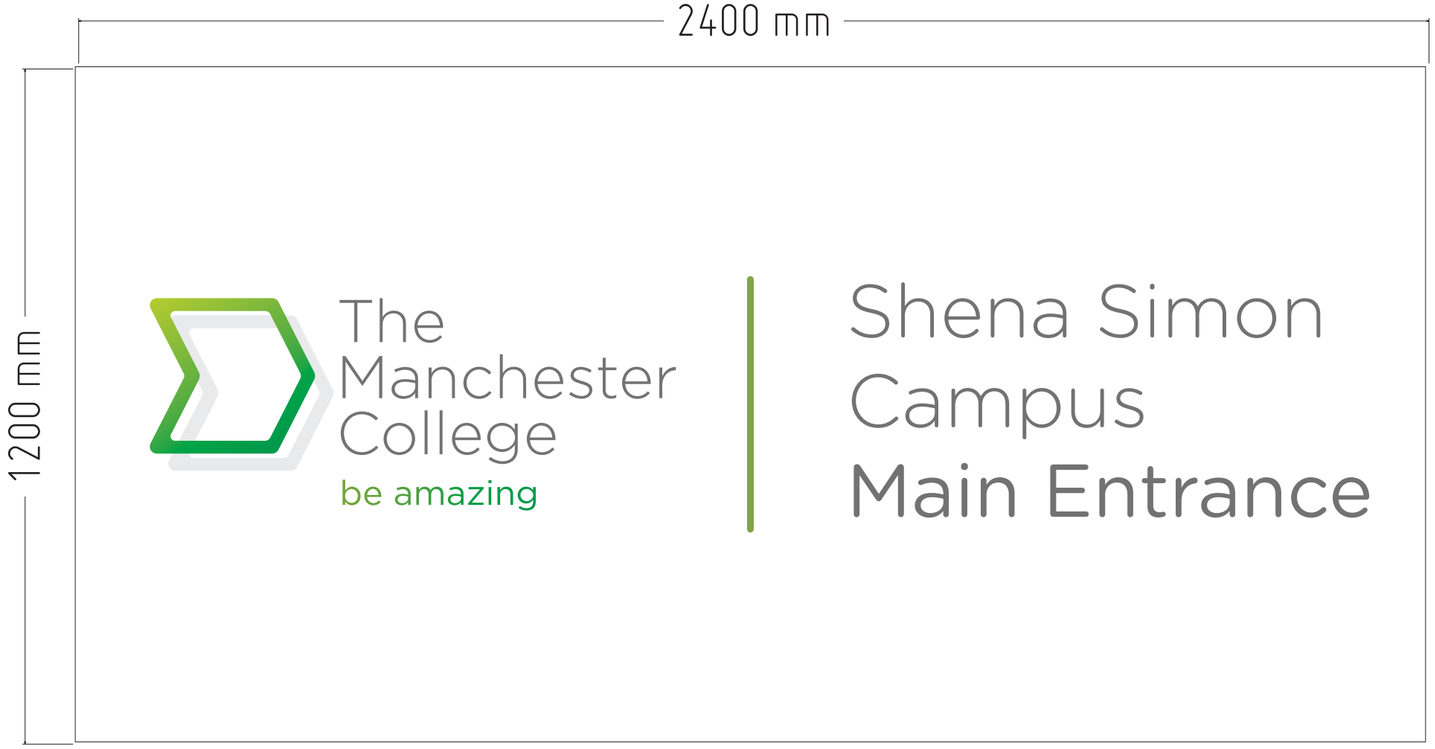

1 OFF – SUPPLY AND INSTALL

REVERSE DIGITAL PRINT ONTO 6052PE CLEAR VINYL, BACKED IN P.V.829 WHITE VINYL APPLIED TO INTERIOR WINDOW, FACING OUT

PROPOSED



ASTRA JOB NUMBER 39663

ACCOUNT MANAGER LM

SCALE 1:10 DRAWN BY CDL

APPROVED FOR PRODUCTION 20/09/16

REV #	DATE	REV #	DATE
1	15/09/16		

Colour Specification

- PMS 7741C
- PMS 424C
- PMS 2301C
- PMS 379C
- PMS 2392C
- 9% BLACK

Print – Specification

☐ FACE PRINT ☑ REVERSE PRINT

CLIENT
THE MANCHESTER COLLEGE

VISUAL
SHENA SIMON SIGNAGE REBRAND

Astra Signs Limited | 204 Dantzic Street | Manchester M4 4DD
Tel 0161 832 2429 Email sales@astrasigns.com

DO NOT SCALE FROM THIS DRAWING ALL DIMENSIONS TO BE CHECKED ON SITE PRIOR TO MANUFACTURE

© All rights reserved, including the right to reproduce in whole or in part without the consent of Astra Signs Ltd. This printout is for visual purposes only and not to be used as an exact colour reference.

ELEMENT 13

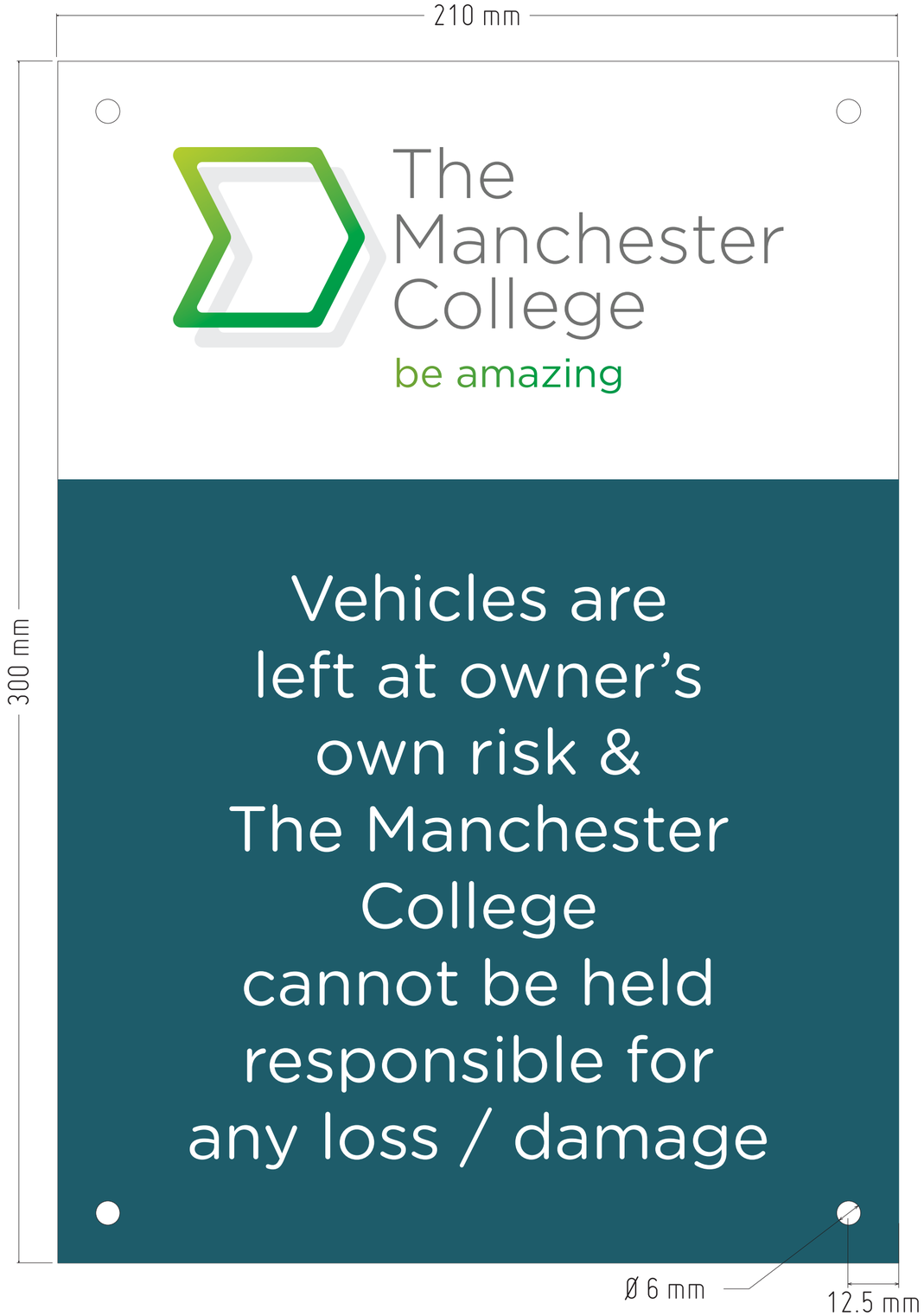

1 OFF – SUPPLY AND INSTALL

DIRECT PRINT ONTO 3MM ALUMINUM COMPOSITE,
SCREW FIXED TO WALL + CAPS

PROPOSTED

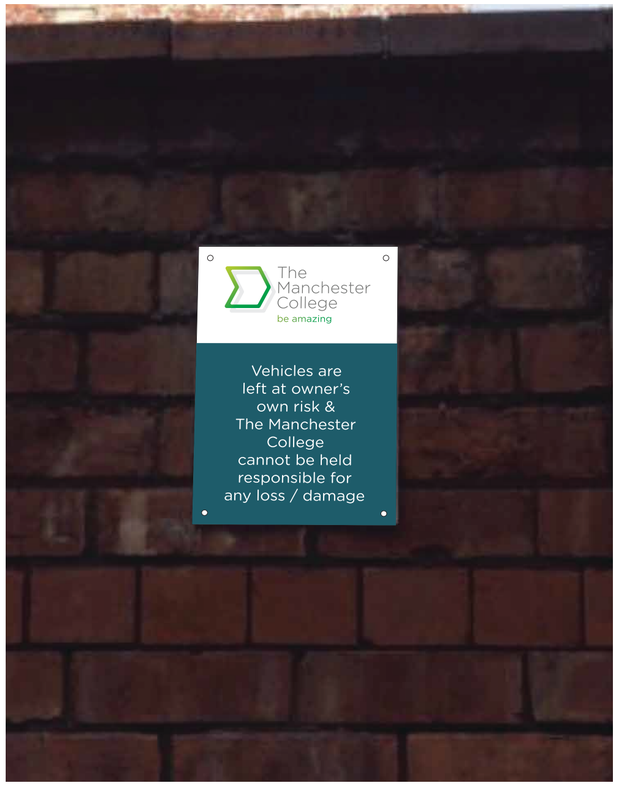

ASTRA JOB NUMBER 39663

ACCOUNT MANAGER LM

SCALE 1:10 DRAWN BY CDL

APPROVED FOR PRODUCTION 20/09/16

REV #	DATE	REV #	DATE
1	15/09/16		

Colour Specification

- PMS 7741C
- PMS 424C
- PMS 2301C
- PMS 379C
- PMS 2392C
- 9% BLACK

Print – Specification

☑ FACE PRINT ☐ REVERSE PRINT

CLIENT
THE MANCHESTER COLLEGE

VISUAL
SHENA SIMON SIGNAGE REBRAND

Astra Signs Limited | 204 Dantzic Street | Manchester M4 4DD
Tel 0161 832 2429 Email sales@astrasigns.com

DO NOT SCALE FROM THIS DRAWING ALL DIMENSIONS TO BE CHECKED ON SITE PRIOR TO MANUFACTURE

© All rights reserved, including the right to reproduce in whole or in part without the consent of Astra Signs Ltd. This printout is for visual purposes only and not to be used as an exact colour reference.

ELEMENT 15

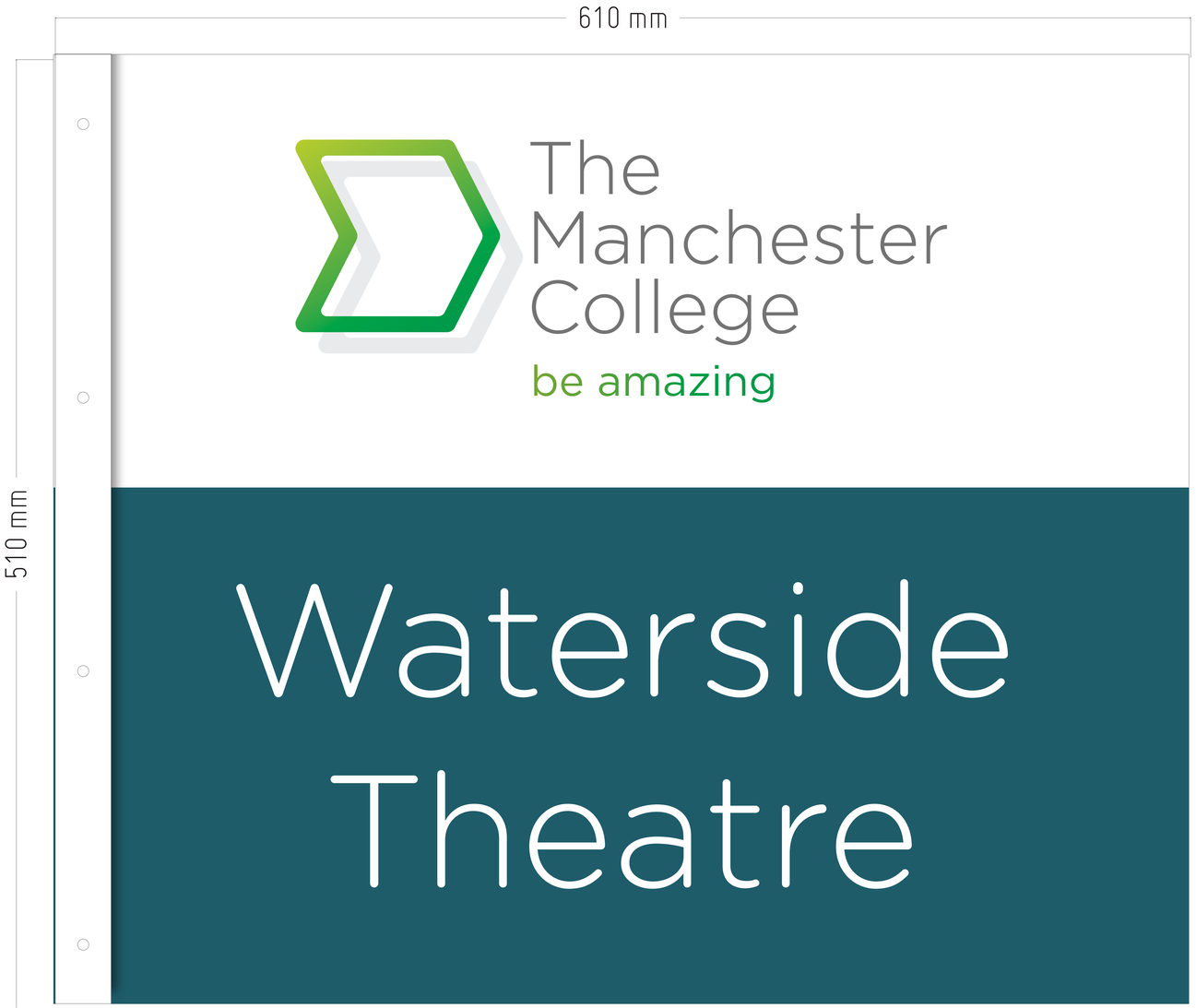

1 OFF – SUPPLY AND INSTALL

DOUBLE SIDED DIRECT PRINT ONTO 3MM ALUMINUM COMPOSITE, MOUNTED TO THE WALL WITH 25MM ALUMINUM ANGLES

PROPOSED

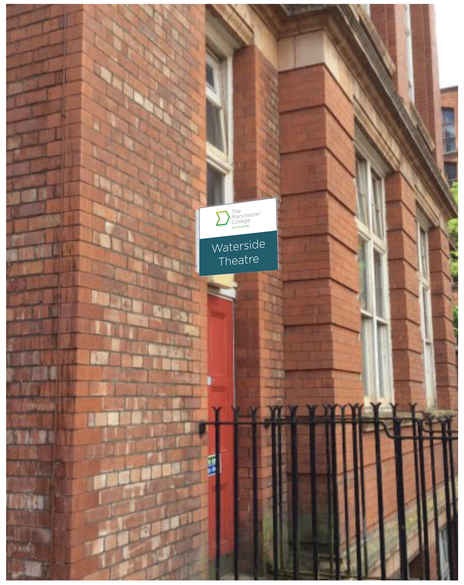



ASTRA JOB NUMBER 39663

ACCOUNT MANAGER LM

SCALE 1:10 DRAWN BY CDL

APPROVED FOR PRODUCTION 20/09/16

REV #	DATE	REV #	DATE
1	15/09/16		

Colour Specification

- PMS 7741C
- PMS 424C
- PMS 2301C
- PMS 379C
- PMS 2392C
- 9% BLACK

Print – Specification

☑ FACE PRINT ☐ REVERSE PRINT

CLIENT
THE MANCHESTER COLLEGE

VISUAL
SHENA SIMON SIGNAGE REBRAND

Astra Signs Limited | 204 Dantzic Street | Manchester M4 4DD
Tel 0161 832 2429 Email sales@astrasigns.com

DO NOT SCALE FROM THIS DRAWING ALL DIMENSIONS TO BE CHECKED ON SITE PRIOR TO MANUFACTURE

© All rights reserved, including the right to reproduce in whole or in part without the consent of Astra Signs Ltd. This printout is for visual purposes only and not to be used as an exact colour reference.

ELEMENT 16

610 mm

815 mm

The Manchester College
be amazing

Box Office
Main Reception
This Way

2 OFF – SUPPLY AND INSTALL

DIRECT PRINT ONTO 3MM ALUMINUM
COMPOSITE, SCREWED TO BOTH SIDES OF WOODEN A BOARD
ON SITE COVER WITH WHITE CAPS



ASTRA JOB NUMBER 39663

ACCOUNT MANAGER LM

SCALE 1:10 DRAWN BY CDL

APPROVED FOR PRODUCTION 20/09/16

REV #	DATE	REV #	DATE
1	15/09/16		

Colour Specification

PMS 7741C
PMS 424C
PMS 2301C
PMS 379C
PMS 2392C
9% Black

Print – Specification

☑ FACE PRINT ☐ REVERSE PRINT

CLIENT
THE MANCHESTER COLLEGE

VISUAL
SHENA SIMON SIGNAGE REBRAND

Astra Signs Limited | 204 Dantzic Street | Manchester M4 4DD
Tel 0161 832 2429 Email sales@astrasigns.com

DO NOT SCALE FROM THIS DRAWING ALL DIMENSIONS TO BE CHECKED ON SITE PRIOR TO MANUFACTURE

© All rights reserved, including the right to reproduce in whole or in part without the consent of Astra Signs Ltd. This printout is for visual purposes only and not to be used as an exact colour reference.

ELEMENT 17



2 OFF – SUPPLY AND INSTALL

DIRECT PRINT ONTO 3MM ALUMINUM
COMPOSITE, SCREWED TO BOTH SIDES OF WOODEN A BOARD
ON SITE COVER WITH WHITE CAPS

PROPOSED



ASTRA JOB NUMBER 39663

ACCOUNT MANAGER LM

SCALE 1:10 DRAWN BY CDL

APPROVED FOR PRODUCTION 20/09/16

REV #	DATE	REV #	DATE
1	15/09/16		

Colour Specification

- PMS 7741C
- PMS 424C
- PMS 2301C
- PMS 379C
- PMS 2392C
- 9% BLACK

Print – Specification

- [x] FACE PRINT
- [ ] REVERSE PRINT

CLIENT
THE MANCHESTER COLLEGE

VISUAL
SHENA SIMON SIGNAGE REBRAND

Astra Signs Limited | 204 Dantzic Street | Manchester M4 4DD
Tel 0161 832 2429 Email sales@astrasigns.com

DO NOT SCALE FROM THIS DRAWING ALL DIMENSIONS TO BE CHECKED ON SITE PRIOR TO MANUFACTURE

© All rights reserved, including the right to reproduce in whole or in part without the consent of Astra Signs Ltd. This printout is for visual purposes only and not to be used as an exact colour reference.