# Fixing Details for Camera Nos. 3, 11, 12 & 13 on Drawing E/01

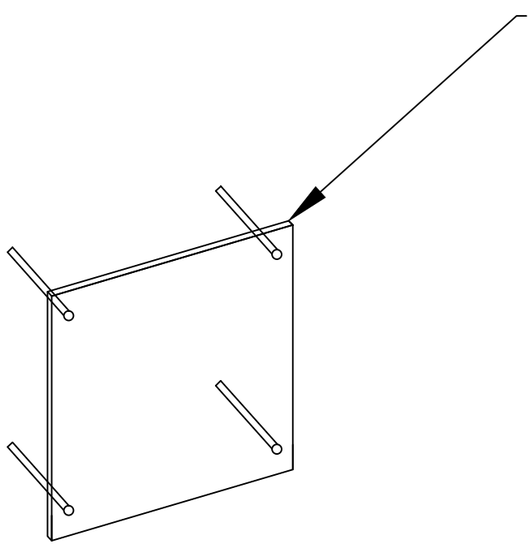


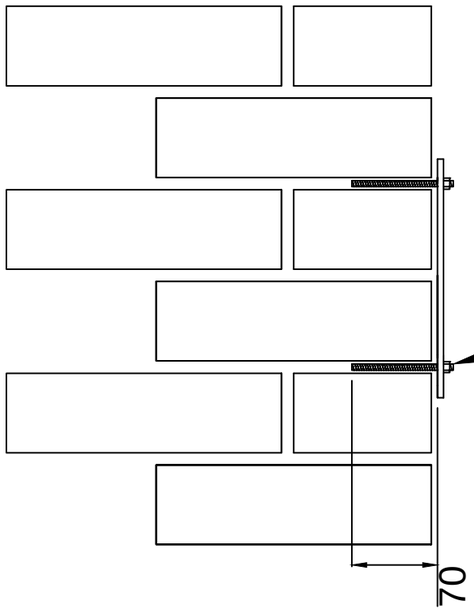


M6 Threaded bolts fixed in coursework using suitable chemical fixing i.e. Fischer Powerbond System

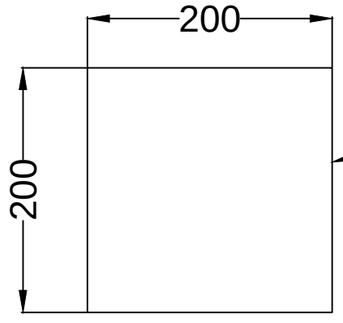


200x200mm Metal plate to support new camera. The plate is secured to the brickwork using screws aligned with the mortar joints. The metal plate and equipment is painted RAL7016 Grey.

| Rev | Description | By | Date |
|---|---|---|---|
| | | | |
| | | | |
| | | | |

**Capital Programmes & Property**
**Growth & Neighbourhood Directorate**

Manchester City Council
PO Box 532 Town Hall
Manchester
M60 2LA

| JOB TITLE | | DRAWING TITLE | |
|---|---|---|---|
| Wythenshawe Hall CCTV Installation | | Camera Fixing Details | |
| JOB NO. | | DRAWING NO. | |
| LS/43635 | | D/01 | |
| DATE | SCALE | DRAWN | REVISION |
| Jan 2017 | 1/5 | RH | A |

H:\CorporateTechnicalServices\Logos\Guidelines& Logo\Guidelines& Logo\MCC Logo FINAL Black.tif