Arboricultural Consultancy

Ecology & Habitat Consultancy

Land, Building & Engineering Surveys

Utility Mapping, Tracing & Radar Surveys



CHRISTIANS ENVIRONMENTAL

Site Report, Appraisal & Plans

"BS5837 2012: Trees in Relation to Design, Demolition and Construction"

Project: St Werburghs
Date: June 2017
Ref: STW-BS-001
Revision: Revision D

(Head Office) The Lighthouse, 12 Centenary Park, Coronet Way, Eccles, Salford, Manchester, M50 1RE
T: 0161 8500211 E: info@christiansltd.com Company Reg No. 7514654 VAT No.109428515

CHRISTIANS ENVIRONMENTAL

1 INTRODUCTION 3

1.1 Instruction 3
1.2 Purpose of the Report 3
1.3 Provided Documents 3
1.4 Tree Data Collection 3
1.5 Interpretation of Tree Data 3

2 SITE CONTEXT 5

2.1 Site Overview 5
2.2 Surrounding Area 5
2.3 Geological Details 5
2.4 Proposals 5

3 ARBORICULTURAL IMPACT ASSESSMENT 6

3.1 Summary of the Impact on Trees 6
3.2 Detailed Impact Assessment 7
3.3 Impact on Local Amenity 9
3.4 Protection of Retained Trees 9
3.5 Trees Within Close Proximity to Structures 9

4 ARBORICULTURAL METHODS STATEMENT AND CONSTRUCTION DOCUMENT 10

4.1 Introduction 10
4.2 Programme and Phasing of Tree Management 10
4.2.1 Stage 1: Carry out agreed tree removal works 10
4.2.2 Stage 2. Implement tree protection 11
4.2.3 Stage 3. Carry out construction works. 11
4.3 Additional Notes 13
4.3.1 Site Storage, Cement Mixing and Washing Points 13
4.3.2 Services 13

5 APPENDICES 14

APPENDIX A: TREE DATA

APPENDIX B: TREE CONSTRAINTS PLAN

APPENDIX C: TREE RETENTION PLAN

APPENDIX D: TREE PROTECTION PLAN

APPENDIX E: TREE PROTECTION FENCING SPECIFICATION

APPENDIX F: TREE PROTECTION SIGN

APPENDIX G: GLOSSARY OF ARBORICULTURAL TERMS

(Head Office) The Lighthouse, 12 Centenary Park, Coronet Way, Eccles, Salford, Manchester, M50 1RE
T: 0161 8500211 E: info@christiansltd.com Company Reg No. 7514654 VAT No.109428515
CHRISTIANS ENVIRONMENTAL

1 Introduction

1.1 Instruction

Christians Environmental have been instructed to inspect all trees within the site boundary and trees in adjacent land that may be affected by the proposed development, the aim of which is to prepare the following information to accompany a planning submission for the site:

- Schedule of the relevant trees to include basic data and a condition assessment
- Appraisal of the impact of the proposed development on the trees and any resulting impact that it has on local amenity.
- Arboricultural method statement setting out appropriate protective measures and management for trees to be retained.

1.2 Purpose of the Report

This report provides an analysis of the impact of any proposed development on trees and local amenity with additional guidance on appropriate management and protective measures. Its primary purpose is for the Local Authority to review any tree issues associated with any future planning applications and use as a basis for issuing a planning consent or engaging in further discussions towards that end. During the planning process, this document and accompanying data will be available for inspection by people including the general public; therefore, we aim to present the information in a format that is easily understandable to people without a general knowledge of the subject area.

1.3 Provided Documents

The following plans have been provided.

- Land Survey, provided in dwg format
- Landscape Master Plan

1.4 Tree Data Collection

All Trees on site which are adjacent to any proposed development areas or fall directly into these areas have been numbered and species identified. Each tree has also been inspected as described in British Standard 5837; this includes information on height, diameter, crown spread, maturity, condition and recommendations. Each tree is also classified as a category A, B, C or U (Summary in the Appendix). This categorization reflects the trees material constraint on the proposed development. Collection of information also takes into consideration any low branches, structural or physiological conditions and any remaining contribution that the tree offers to the site.

1.5 Interpretation of Tree Data

Within section 5 of the British Standard BS 5837 it recommends that the stem diameter taken at breast height is used to calculate the root protection area. This root protection area can be interpreted to identify any design constraints to the site. Once site design has taken place this data can be used to form the basis of any exclusion zone and position of protective barriers/fencing.

Also included within this report are:

- The Tree Constraints Plan which identifies any arboricultural constraints on site.
- The Tree Protection Plan which shows the location of the protective fencing and area set to exclusion zones.

(Head Office) The Lighthouse, 12 Centenary Park, Coronet Way, Eccles, Salford, Manchester, M50 1RE
T: 0161 8500211 E: info@christiansltd.com Company Reg No. 7514654 VAT No.109428515

These plans act as a visual aid in the planning stage and are also designed to aid and instruct contractors on site. The use of these plans should also be implemented on site visits to check on the location of the protective barrier and area.

(Head Office) The Lighthouse, 12 Centenary Park, Coronet Way, Eccles, Salford, Manchester, M50 1RE
T: 0161 8500211 E: info@christiansltd.com Company Reg No. 7514654 VAT No.109428515

2 Site Context

2.1 Site Overview

The site is currently an empty residential property with associated gardens and occasional out buildings.

2.2 Surrounding Area

The surrounding area is mostly residential.

2.3 Geological Details

Texture:	Loam and Sand
pH:	Very Acid
Drainage:	Naturally Wet
Fertility:	Very Low
Carbon:	Medium
Drains to:	Shallow Groundwater

(Land Information Systems, 2016.)

2.4 Proposals

The proposals are to renovate the existing property and erect one detached property and 2 pairs of semi-detached properties.

3 Arboricultural Impact Assessment

3.1 Summary of the Impact on Trees

Within the proposed development area and including adjacent land there is a total of 67 individual trees.

Individual Trees

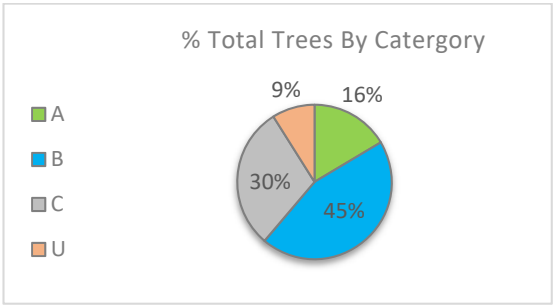

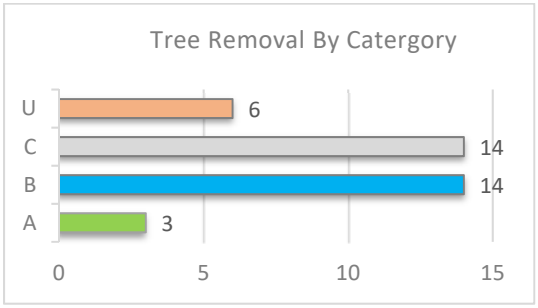

Tree Removal by Tag

Category	Total	Tree Tags
Cat A	3	T17, T18 and T23
Cat B	14	T15, T16, T19, T25, T33, T34, T35, T36, T56, T57, T58, T60, T61 and T62
Cat C	14	T1, T2, T3, T8, T20, T21, T24, T26, T29, T37, T44, T59, T63, T64 and T65
Cat U	6	T7, T22, T32, T45, T55 and T66

3.2 Detailed Impact Assessment

(Please refer to the Tree Constraints and Tree Data Section when reading the below information).

Category A trees and groups. (Trees of high quality)		
Removal due to the proposals	Rooting affected by the proposals	Pruning due to the proposals
T17, T18 and T23	T10, T30, T38, T39, T40, T46 and T67	-

- T17, T18 and T23 will need to be removed to accommodate the proposal as they are all within the footprint of a proposed building.
- T10, T30, T38, T39, T40 and T46 will all suffer some root protection area (RPA) loss totalling 20%, 11%, 3%, 2%, 8%, 7% and 12% respectively. See method statement for more details.

A number of trees have the potential to be affected by the proposals. It is intended to apply tree protection methods to ensure that trees are adequately protected throughout the construction phase.

For more information, refer to the tree data sheets, tree retention plans and method statement.

Category B trees and groups. (Trees of moderate quality)		
Removal due to the proposals	Rooting affected by the proposals	Pruning due to the proposals
T15, T16, T19, T25, T33, T34, T35, T36, T56, T57, T58, T60, T61 and T62	T9	-

- T15 and T16 will ned to be removed in order to allow for one of the proposed buildings to be constructed. Too much of the RPA will be affected to make them viable for retention.
- T19 and T25 will ned to be removed in order to allow for one of the proposed buildings to be constructed. Too much of the RPA will be affected to make them viable for retention.
- T33, T34, T35, T36, T56, T57, T58, T60, T61 and T62 will all need to be removed in order to allow for the new access to be put in for the proposed houses off Chatburn Road. This is largely due to the trees being situate non a bund around the site.
- T9 will suffer some RPA loss to accommodate a new access and this will total no more than 18%. See method statement for more detail.

A number of trees have the potential to be affected by the proposals. It is intended to apply tree protection methods to ensure that trees are adequately protected throughout the construction phase.

For more information, refer to the tree data sheets, tree retention plans and method statement.

(Head Office) The Lighthouse, 12 Centenary Park, Coronet Way, Eccles, Salford, Manchester, M50 1RE
T: 0161 8500211 E: info@christiansltd.com Company Reg No. 7514654 VAT No.109428515
CHRISTIANS ENVIRONMENTAL

Category C trees and groups. (Trees of low quality)		
Removal due to the proposals	Rooting affected by the proposals	Pruning due to the proposals
T1, T2, T3, T8, T20, T21, T24, T26, T29, T37, T44, T59, T63, T64 and T65	-	-

- T1, T2 and T3 will need to be removed in order to allow for access to the existing properties garage.
- T20, T21, T42 and T26 will need to be removed to accommodate the proposal as they are within the footprint of one of the proposed properties.
- T29, T37, T59, T63, T64 and T65 will all need to be removed in order to allow for the new access to be put in for the proposed houses off Chatburn Road. This is largely due to the trees being situate non a bund around the site.
- T44 will be removed as it leans towards one of the proposed properties and would pose a safety risk to not only workers constructing the properties but any future owner/tenant of the property.

A number of trees have the potential to be affected by the proposals. It is intended to apply tree protection methods to ensure that trees are adequately protected throughout the construction phase.

For more information, refer to the tree data sheets, tree retention plans and method statement.

Category U trees and groups. (Trees unsuitable for retention)
Removal due to poor quality and/or health & safety requirements
T7, T22, T32, T45, T55 and T66

- T7, T22, T32, T45, T55 and T66 are all of a condition that warrants their removal.

For more information, refer to the tree data sheets, tree retention plans, special construction plans and method statement.

(Head Office) The Lighthouse, 12 Centenary Park, Coronet Way, Eccles, Salford, Manchester, M50 1RE
T: 0161 8500211 E: info@christiansltd.com Company Reg No. 7514654 VAT No.109428515

3.3 Impact on Local Amenity

Whilst there are tree removals from this site the proposals have been designed to retain the most prominent and highest category of trees. This can be seen by the amount of low category trees to be removed versus the amount of high category trees to be removed. The majority of the trees to be removed are in the centre of the site where visibility from public spaces is limited. Almost all of the trees surrounding the site have been retained. This will ensure there is minimal impact on the amenity value of the site.

3.4 Protection of Retained Trees

The successful retention of trees depends on the quality of the protection and the procedures to ensure any protective measures remain in place.

This is carried out by means of an arboricultural method statement contained within this report.

3.5 Trees Within Close Proximity to Structures

When building new structures of any kind within close proximity to trees, it is recommended that a civil engineer should be appointed to specify the correct foundations and any further measures which may be required.

(Head Office) The Lighthouse, 12 Centenary Park, Coronet Way, Eccles, Salford, Manchester, M50 1RE
T: 0161 8500211 E: info@christiansltd.com Company Reg No. 7514654 VAT No.109428515

4 Arboricultural Methods Statement and Construction Document

4.1 Introduction

This Method Statement has been drawn up to assist the Local Authority and the developer in overseeing the construction of the proposed development at St Werburghs Road.

This document seeks to list those trees which are proposed for removal and discuss any tree constraints and implications. It describes the proposals for ensuring retained trees will survive the development process and thrive after the development has taken place. The development and timing of construction operations are described, together with materials which would be used in order to maximize tree protection.

This statement will be included as part of the specification and schedule of works issued to the building contractor and will form part of the contract. The accompanying arboricultural statement plans will be available on site for inspection along with this method statement.

4.2 Programme and Phasing of Tree Management

Stage	Requirement
1	Carry out agreed tree removal works
2	Implement tree protection
3	Carry out construction works

4.2.1 *Stage 1: Carry out agreed tree removal works*

All trees/vegetation marked for removal are coded on the Tree Retention Plan to aid arboricultural contractors identify the correct trees.

All arboricultural operations on site including tree removal must be carried out by an arboricultural contractor that is able to comply with British Standards 3998: 2010 – Tree Work Recommendations.

All arboricultural contractors should be insured to a minimum of £5 million and able to show competency by means of relevant certification and health and safety policy.

Because of the location of this site and characteristics of certain trees it is recommended that the arboricultural contractors have relevant experience of working with protected species, namely bats. Any qualifications or certification of competency should be sought at the tender stage.

(Head Office) The Lighthouse, 12 Centenary Park, Coronet Way, Eccles, Salford, Manchester, M50 1RE
T: 0161 8500211 E: info@christiansltd.com Company Reg No. 7514654 VAT No.109428515

Tree Removal Works	
Due To The Proposal	Due To Poor Overall Condition
T17, T18 and T23 **T15, T16, T19, T25, T33, T34, T35, T36, T56, T57, T58, T60, T61 and T62** **T1, T2, T3, T8, T20, T21, T24, T26, T29, T37, T44, T59, T63, T64 and T65**	**T7, T22, T32, T45, T55 and T66**

Tree Pruning Works	
Due To The Proposal	Due To Poor Overall Condition
	-

4.2.2 *Stage 2. Implement tree protection*

Before any construction works commence on site it is imperative that the tree protection fencing and ground protection systems are put in first. The specification for this fencing can be seen in Appendix E contained within this report. This should be accompanied by signs indication what the fencing is. An example of one of these can be seen in Appendix F.

4.2.3 *Stage 3. Carry out construction works.*

During the construction phase it is important that all staff are aware of the tree protection areas and their importance during a site induction. If any breach in the tree protection occurs, it is the site manager's responsibility to report this urgently to the arboricultural consultants so the appropriate measures can be taken.

A number of trees will be subject to excavations within the RPA. It is recommended that these be done under supervision of a suitably qualified arborist. This should be done by hand where possible and once roots are exposed any large roots should be pruned back to a suitable point using proper root pruning techniques. This will ensure that the tree suffer minimal stress from the excavations and the wounds heal not leaving the trees open to attack from, pathogens. Once the root pruning has taken place a small retaining wall may be required in order to support any remaining soil that may be elevated above the finished surface.

In The area of the prposed driveway off of St Werburghs Road the level of excavation should be kept to an absolutel minimum in order to link the proposed driveway to the existing road. It should then

(Head Office) The Lighthouse, 12 Centenary Park, Coronet Way, Eccles, Salford, Manchester, M50 1RE
T: 0161 8500211 E: info@christiansltd.com Company Reg No. 7514654 VAT No.109428515

be built using a geocell supported substrate with permeable surface to allow water to penetrate to any existing roots that have remained.

The structure of the driveway should be designed by a competent person to ensure that it is fit for purpose. Once it has been designed the exact level of excavation can be determined and the levels worked form that point. An example of such a structure can be seen below:

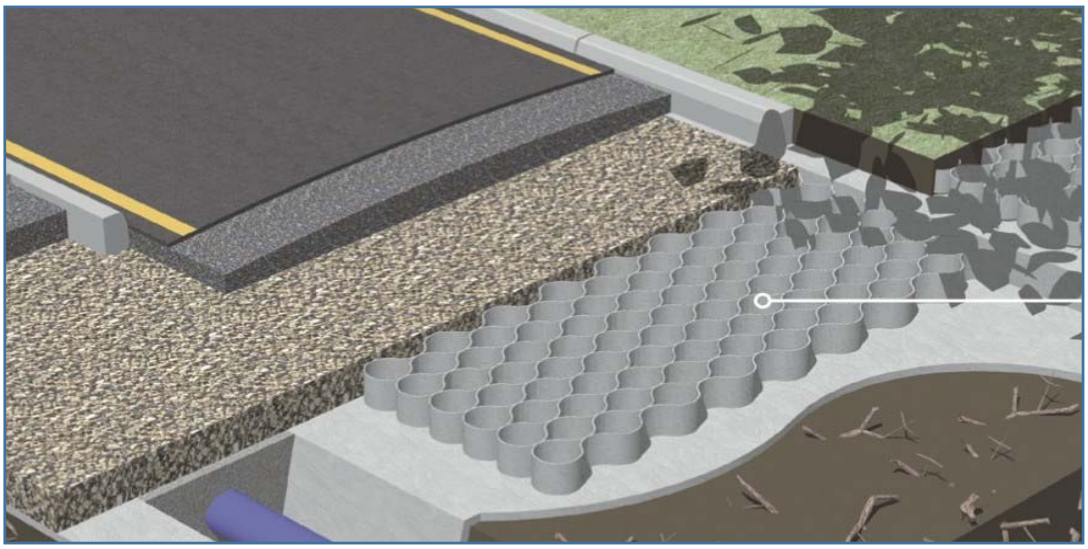

This methodology will ensure that any roots that remain after the excavation will remain uncompacted and able to function normally. It will also allow for roots to continue to grow under the new surface without disruption to the surface itself.

(Head Office) The Lighthouse, 12 Centenary Park, Coronet Way, Eccles, Salford, Manchester, M50 1RE
T: 0161 8500211 E: info@christiansltd.com Company Reg No. 7514654 VAT No.109428515

4.3 Additional Notes

4.3.1 *Site Storage, Cement Mixing and Washing Points*

All site storage areas, cement mixing and washing points for equipment and vehicles must be outside the RPA and it is recommended that this area is extended to 10 metres away from the protective fencing in respect to the above. Where there is a risk of polluted water runoff into RPA's, heavy duty plastic sheeting and sandbags must be used to contain any spillages and prevent contamination.

4.3.2 *Services*

All service runs will be aligned to pass outside the RPA's of the trees so they will have no effect on the trees.

In the rare chance that the need arises to dig within the protective fence lines at any time, the developer's arboriculturist will liaise with the local authority's tree officer in order to implement non-destructive trenching methods (open trenching by use of air spade or a mole dig system).

All work to services on site will be undertaken in line with the NJUG "Guidelines for Planning, Installation and Maintenance of Utility Services in Proximity to Trees".

(Head Office) The Lighthouse, 12 Centenary Park, Coronet Way, Eccles, Salford, Manchester, M50 1RE
T: 0161 8500211 E: info@christiansltd.com Company Reg No. 7514654 VAT No.109428515

5 Appendices

APPENDIX A: TREE DATA

APPENDIX B: TREE CONSTRAINTS PLAN

APPENDIX C: TREE RETENTION PLAN

APPENDIX D: TREE PROTECTION PLAN

APPENDIX E: TREE PROTECTION FENCING SPECIFICATION

APPENDIX F: TREE PROTECTION SIGN

APPENDIX G: GLOSSARY OF ARBORICULTURAL TERMS

Within this section is the tree survey data. Also included is a chart explaining how trees are classed when carrying out a BS 5837:2012 "trees in relation to design demolition and construction" report. Within the appendix is also a glossary of arboricultural terms.

Category A	Those of high quality and value: in such a condition as to be able to make a substantial contribution (a minimum of 40 years is suggested)
Category B :	Those trees of moderate quality and value: those in such a condition as to make a significant contribution (a minimum of 20 years is suggested)
Category C :	Those trees of low quality and value: currently in adequate condition to remain until new planting could be established (a minimum of 10 years is suggested)
Category U :	Those in such a condition that any existing value would be lost within 10 years and which should, in the current context, be removed for reasons of sound arboricultural management

KEY:

Tree Numbers/Tags	*Individual tree = T + number*
	Group of trees = G + number
Species	*Common and or scientific names where appropriate*
Height	*Overall tree height*
Crown Clearance (C.C.)	*Overall height of lowest branches from the ground level*
Diameter at breast height	*Measurement of tree stem*
Canopy spread	*Extents of tree branches taken in compass points*
Age Class	*(Y=Young) (SM= Semi Mature) (M=Mature) (OM=Over Mature) (V=Veteran)*
Tree Condition	*Comments on trees overall health etc.*
Comments	*Any further details that may be of importance*
Management recs	*List of urgent works or further investigation that may be needed*
Remaining contribution	*How long the tree will offer a contribution*
Category Rating	*See opposite table*

Tree no.	Species	Height (m)	C.C. (m)	No. of stems	DBH (cm)	N	E	S	W	Age Class	Physiological Condition	Structural Condition	Condition comments	Preliminary management recommendations	Remaining contribution (years)	Category
T1	Sorbus spp	7	3	1	26	4	2	3	2	M	Good	Good	- unbalanced crown - rpa-hard surface	<Null>	21-30	C.1
T2	Prunus spp	7	3	1	28	3	2	2	2	M	Moderate	Good	- poor pruning - deadwood	<Null>	11-20	C.1
T3	Sambucus nigra	7	3	1	15	3	1	2	3	SM	Good	Good	- unbalanced crown	<Null>	21-30	C.1
T4	Fagus sylvatica	16	4	1	80	7	8	8	8	M	Good	Good	- basal restrictions - basal damage - lifting pavement	<Null>	31-40	B.1

Tree no.	Species	Height (m)	C.C. (m)	No. of stems	DBH (cm)	N	E	S	W	Age Class	Physiological Condition	Structural Condition	Condition comments	Preliminary management recommendations	Remaining contribution (years)	Category
T5	Ilex aquifolium	11	1	6	23	4	6	3	3	M	Good	Good	- limited rpa due to raised bed - root girdling	<Null>	31-40	B.1
T6	Ilex aquifolium	12	1	1	60	4	5	3	5	M	Good	Good	<Null>	<Null>	31-40	B.1
T7	Prunus spp	6	3	1	36	3	3	4	2	OM	Poor	Poor	- major dieback	<Null>	<10	U
T8	Betula pendula	14	3	1	35	2	6	5	5	M	Good	Good	- suppressed to north - minor dieback - deadwood	<Null>	21-30	C.1
T9	Fagus sylvatica	17	4	1	72	6	8	7	8	M	Good	Good	- poor pruning - minor deadwood - lapsed pollard	<Null>	40>	B.1
T10	Acer sacharum	18	4	1	104	8	9	8	8	M	Good	Good	- included union - potential issues at main fork - fruiting bodies	Aerial inspection	40>	A.1
T11	Betula pendula	14	4	1	50	5	5	7	5	M	Good	Good	- bacterial canker - deadwood	<Null>	31-40	B.1
T12	Chamaecyparis lawsoniana	6	1	1	18	1	1	1	1	M	Good	Good	- squirrel damage/lower stem	<Null>	31-40	B.1
T13	Betula	15	6	1	53	7	6	6	6	M	Good	Good	- minor deadwood - hangers - hard surface	<Null>	40>	A.1
T14	Sorbus	7	3	4	13	1	2	2	2	SM	Good	Good	- suppressed to north	<Null>	21-30	C.1
T15	Larch	13	4	1	28	2	2	4	3	SM	Good	Good	- unbalanced crown - poor pruning	<Null>	40>	B.1
T16	Larch	18	5	1	42	4	3	4	4	M	Good	Good	- unbalanced crown	<Null>	40>	B.1
T17	Quercus	15	2	1	40	6	5	6	6	SM	Good	Good	- squirrel damage upper crown - crown dieback - deadwood	<Null>	40>	A.1
T18	Chamaecyparis lawsoniana	8	1	1	18	2	2	2	2	M	Good	Good	-	<Null>	40>	A.1
T19	Larix decidua	18	4	1	51	5	5	4	4	M	Good	Good	- deadwood	<Null>	31-40	B.1
T20	Chamaecyparis lawsoniana	15	1	1	27	3	1	1	1	M	Moderate	Good	<Null>	<Null>	11-20	C.1

Tree no.	Species	Height (m)	C.C. (m)	No. of stems	DBH (cm)	N	E	S	W	Age Class	Physiological Condition	Structural Condition	Condition comments	Preliminary management recommendations	Remaining contribution (years)	Category
T21	Chamaecyparis lawsoniana	10	1	3	-	2	2	2	2	M	Good	Good	- animal damage lower stems	<Null>	21-30	C.1
T22	Sycamore	9	5	1	18	1	2	2	1	SM	Poor	Poor	- major dieback - unbalanced crown	<Null>	<10	U
T23	Chamaecyparis	8	1	1	19	2	1	1	1	SM	Good	Good	- animal burrows in RPA	<Null>	40>	A.1
T24	Prunus	5	2	1	15	1	1	1	1	SM	Moderate	Good	- poor specimen/restricted growth	<Null>	11-20	C.1
T25	Betula	16	6	1	42	5	4	3	6	M	Good	Good	- poor pruning - pruning wounds	<Null>	31-40	B.1
T26	Acer	14	3	1	45	3	5	4	4	M	Moderate	Moderate	- major ivy into crown - limited growth potential - located in raised bed with restricted rpa	<Null>	11-20	C.1
T27	Tilia	16	5	1	46	5	3	4	4	M	Good	Good	- located in raised bed - limited rpa to north	<Null>	31-40	B.1
T28	Chamaecyparis lawsoniana	13	1	1	31	2	2	2	2	M	Good	Good	-minor stem damage	<Null>	31-40	B.1
T29	Chamaecyparis lawsoniana	13	1	1	18	2	2	2	2	M	Good	Good	-no major visible defects	<Null>	31-40	C.1
T30	Tilia cordata	18	7	1	60	3	4	4	5	M	Good	Good	-in raised bed -suppressed	<Null>	40>	A.1
T31	Ilex aquifolium	8	1	3	22	3	2	3	3	M	Good	Good	-suppressed -multi stem -included unions -in raised bed	<Null>	21-30	C.1
T32	Tilia cordata	18	5	1	53	2	3	2	4	M	Good	Moderate	-stem decay -suppressed -poor form deadwood decline	<Null>	<10	U
T33	Tilia cordata	18	5	1	54	3	6	2	3	M	Good	Good	-included unions deadwood -suppressed	<Null>	31-40	B.1

Tree no.	Species	Height (m)	C.C. (m)	No. of stems	DBH (cm)	N	E	S	W	Age Class	Physiological Condition	Structural Condition	Condition comments	Preliminary management recommendations	Remaining contribution (years)	Category
T33	Tilia cordata	18	5	1	54	3	6	2	3	M	Good	Good	-included unions deadwood -suppressed	<Null>	31-40	B.1
T34	Tilia cordata	18	3	5	56	3	5	2	3	M	Good	Good	-suppressed -previously reduced -included unions	<Null>	31-40	B.1
T35	Tilia cordata	18	3	1	62	3	5	2	3	M	Good	Good	-suppressed -previously reduced -included unions	<Null>	31-40	B.1
T36	Tilia cordata	18	3	1	58	3	5	2	3	M	Good	Good	-suppressed -previously reduced -included unions	<Null>	31-40	B.1
T37	Chamaecyparis lawsoniana	12	1	1	49	2	2	2	2	M	Good	Good	-previously topped	<Null>	21-30	C.1
T38	Populus tremula	18	4	1	92	3	3	3	3	M	Good	Good	-touching boundary wall -minor deadwood -approx 50cm above lawn	<Null>	40>	A.1
T39	Populus tremula	18	4	1	72	3	3	3	3	M	Good	Good	-touching boundary wall -minor deadwood -approx 50cm above lawn	<Null>	40>	A.1
T40	Populus tremula	18	4	1	94	3	3	3	3	M	Good	Good	-touching boundary wall -minor deadwood -approx 50cm above lawn	<Null>	40>	A.1
T41	Betula pendula	15	3	1	38	5	3	3	3	M	Good	Good	-suppressed -close to boundary wall -minor deadwood -unbalanced	<Null>	31-40	B.1
T42	Chamaecyparis lawsoniana	12	1	1	23	2	2	2	2	M	Good	Good	-suppressed	<Null>	31-40	B.1

Tree no.	Species	Height (m)	C.C. (m)	No. of stems	DBH (cm)	N	E	S	W	Age Class	Physiological Condition	Structural Condition	Condition comments	Preliminary management recommendations	Remaining contribution (years)	Category
T43	Ilex aquifolium	8	1	2	222 1	3	3	3	3	M	Good	Good	-suppressed -included union	<Null>	21-30	C.1
T44	Acer platanoides	8	3	1	22	1	4	5	3	M	Good	Good	-heavily suppressed -leaning -unbalanced -minor deadwood	<Null>	21-30	C.1
T45	Acer platanoides	10	3	1	31	4	3	1	3	M	Good	Good	-Phytophthora staining -suppressed -unbalanced	<Null>	<10	U
T46	Chamaecyparis lawsoniana	19	3	1	63	3	3	3	3	M	Good	Good	-minor deadwood	<Null>	40>	A.1
T47	Prunus spp	6	3	1	38	4	3	4	2	M	Good	Good	-no access to base -suppressed -minor deadwood	<Null>	31-40	B.1
T48	Salix alba	15	2	1	58	8	3	6	10	M	Good	Moderate	-suppressed -poor form -unbalanced -leaning -deadwood -snapped branches	<Null>	21-30	C.1
T49	Acer pseudoplatanus	8	3	1	28	5	4	2	2	M	Good	Good	-suppressed -unbalanced -minor deadwood	<Null>	21-30	C.1
T50	Tilia cordata	16	3	1	53	4	4	4	4	M	Good	Good	-minor deadwood -included unions -in raised bed	<Null>	31-40	B.1
T51	Tilia cordata	16	3	1	53	4	4	4	4	M	Good	Good	-minor deadwood -included unions -in raised bed	<Null>	31-40	B.1
T52	Tilia cordata	16	3	1	53	4	4	4	4	M	Good	Good	-minor deadwood -included unions -in raised bed	<Null>	31-40	B.1

Tree no.	Species	Height (m)	C.C. (m)	No. of stems	DBH (cm)	N	E	S	W	Age Class	Physiological Condition	Structural Condition	Condition comments	Preliminary management recommendations	Remaining contribution (years)	Category
T53	Tilia cordata	16	3	1	53	4	4	4	4	M	Good	Good	-minor deadwood -included unions -in raised bed	<Null>	31-40	B.1
T54	Tilia cordata	16	3	1	53	4	4	4	4	M	Good	Good	-minor deadwood -included unions -in raised bed	<Null>	31-40	B.1
T55	Ilex aquifolium	5	1	1	16	2	2	2	2	M	Good	Poor	-severe stem damage	fell	<10	U
T56	Chamaecyparis lawsoniana	16	3	1	24	2	2	2	2	M	Good	Good	-included unions	<Null>	31-40	B.1
T57	Chamaecyparis lawsoniana	16	3	1	28	2	2	2	2	M	Good	Good	-included unions	<Null>	31-40	B.1
T58	Chamaecyparis lawsoniana	16	3	1	31	2	2	2	2	M	Good	Good	-included unions	<Null>	31-40	B.1
T59	Chamaecyparis lawsoniana	16	3	1	16	2	2	2	2	M	Good	Good	-included unions	<Null>	21-30	C.1
T60	Chamaecyparis lawsoniana	16	3	1	24	2	2	2	2	M	Good	Good	-included unions	<Null>	31-40	B.1
T61	Chamaecyparis lawsoniana	16	3	1	32	2	2	2	2	M	Good	Good	-included unions	<Null>	31-40	B.1
T62	Chamaecyparis lawsoniana	16	3	1	25	2	2	2	2	M	Good	Good	-included unions	<Null>	31-40	B.1
T63	Taxus baccata	16	3	1	14	2	2	2	2	M	Good	Good	-included unions	<Null>	31-40	C.1
T64	Taxus baccata	16	3	1	25	2	2	2	2	M	Good	Good	-included unions	<Null>	31-40	C.1
T65	Ilex aquifolium	6	1	1	17	2	2	2	2	M	Good	Good	-suppressed -minor deadwood	<Null>	11-20	C.1
T66	Betula pendula	14	4	1	30	2	2	2	3	M	Poor	Moderate	-stem decay -decline -deadwood	<Null>	<10	U
T67	Acer pseudoplatanus	14	3	1	70	5	5	5	5	M	Good	Good	-in adjacent land	<Null>	40>	A.1

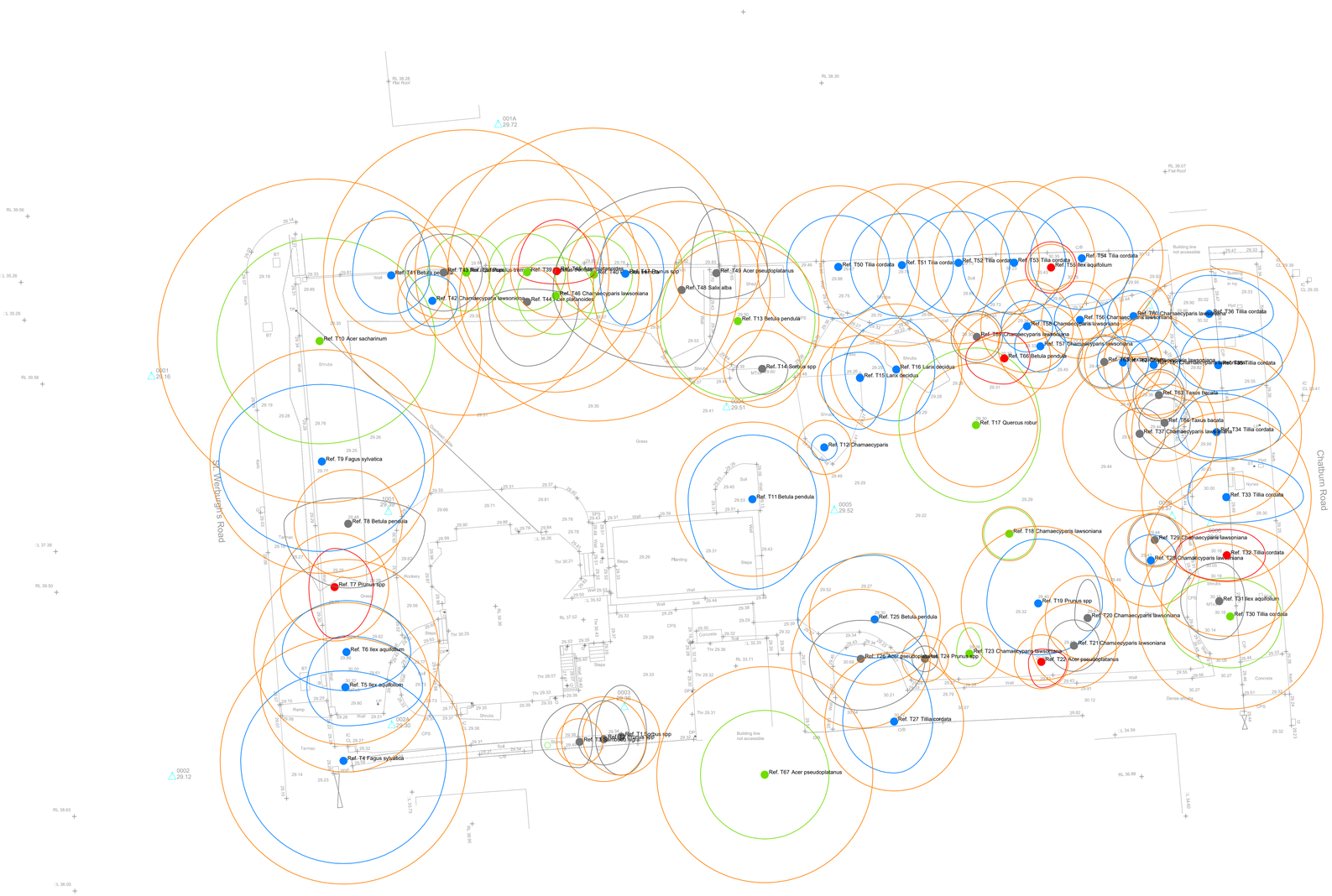

Copyright & Usage Notice

This drawing remains the the property & copyright of Christians Environmental Ltd until payment in full is received.

Any use of this drawing before payment is received unless by prior agreement will be deemed as misuse & will be pursued as necessary.

General Notice

This drawing to be read in conjunction with all other relevantinformation whether produced by Christians Environmental Ltd or by others. Any inconsistencies to be notified to the company immediately

DO NOT SCALE FROM THIS DRAWING. ALL DIMENSIONS TO BE CHECKED ON SITE

KEY:

- Surveyed tree - category A
- Surveyed tree - category B
- Surveyed tree - category C
- Surveyed tree - category U
- Surveyed tree - extents of root protection area (RPA)
- Surveyed group of trees - Category A
- Surveyed group of trees - Category B
- Surveyed group of trees - Category C
- Surveyed group of trees - Category U
- Existing building and/or topographical feature

BS5837:2005 Trees in relation to construction - Categories and definitions

Trees for removal:
U: Identification on Plan - RED - Those in such a condition that any existing value would be lost within 10 years and which should, in the current context, be removed for reasons of sound Arboricultural management.

Criteria
Trees that have a serious, irremediable, structural defect, such that their early loss is expected due to collapse, including those that will become enviable after removal of other R category trees (i.e. where, for whatever reason, thetoss of companion shelter cannot be mitigated by pruning)
Trees that are dead or are showing signs of significant, immediate, and irreversible overall decline
Trees infected with pathogens of significance to the health and/or safety of other trees nearby (e.g. Dutch elm disease),or very low quality trees suppressing adjacent trees of better quality

NOTE: Habitat reinstatement may be appropriate (e.g. R category tree used as a bat roost; installation of bat box in nearby tree)

Trees to be considered for retention:

A: Identification on Plan - LIGHT GREEN - Those of high quality and value: in such a condition as to be able to make a substantial contribution (a minimum of 40 years is suggested)

B: Identification on Plan - MID BLUE - Those of moderate quality and value: those in such a condition as to make a significant contribution (a minimum of 20 years is suggested)

C: Identification on Plan - GREY - Those of low quality and value: currently in adequate condition to remain until new planting could be established (a minimum of 10 years is suggested), or young trees with a stem diameter below 150mm

Category C trees will usually not be retained where they would impose a significant constraint on development. Young trees with a stem diameter of less than 150 mm should be considered for relocation. Category A and B trees will normally be retained

Criteria - Subcategories
The following subcategories are applied. Trees may be allocated more than one subcategory, but this will not increase their overall value

1: Mainly Arboricultural values
A1: Trees that are particularly good examples of their species, especially if rare or unusual, or essential components of groups, or formal or semi-formal Arboricultural features (e.g. the dominant and/or principal trees within an avenue)
B1: Trees that might be included in the high category, but are downgraded because of impaired condition (e.g. presence of remediable defects including unsympathetic past management and minor storm damage)
C1: Trees not qualifying in higher categories

2: Mainly landscape values
A2: Trees, groups or woodlands which provide a definite screening or softening effect to the locality in relation to views into or out of the site, or those of particular visual importance (e.g. avenues or other arboricultural features assessed as groups)
B2: Trees present in numbers, usually as groups or woodlands, such that they form distinct landscape features, thereby attracting a higher collective rating than they might as individuals but which are not, individually, essential components of formal or semi-formal arboricultural features (e.g. trees of moderate quality within an avenue that includes better, 'A' category specimens), or trees situated mainly internally to the site, therefore individually having little visual impact on the wider locality
C2: Trees present in groups or woodlands, but without this conferring on them significantly greater landscape value, and/or trees offering low or only temporary screening benefit

3: Mainly cultural values, including conservation
A3: Trees, groups or woodlands of significant conservation, historical, commemorative or other value (e.g. veteran trees or wood-pasture)
B3: Trees with clearly identifiable conservation or other cultural benefits
C3: Trees with very limited conservation or other cultural benefits

Meters
5 0 5 10
1:200

A	Feb 2016	Tree Constraints Plan	CEL-TW
rev	date	description	by

CHRISTIANS
ENVIRONMENTAL LIMITED
SOLUTIONS FOR SUSTAINABLE DEVELOPMENT

Christians Ltd (Lancashire)
BREC
Nuttall Street
Blackburn
Lancashire
BB2 4JF
t: +44 (0) 1254 841790
e: info@christiansltd.com
w: www.christiansltd.com

Christians Ltd (Cumbria)
The Stable
Coat Flatt Hall
Tebay
Penrith
CA10 3SZ
t: +44 (0) 1539 234022
e: info@christiansltd.com
w: www.christiansltd.com

client
Calderpeel

project
St Werburghs

drawing title
Tree Constraints Plan

scale	drawn	date
1:200 @ A1	CEL-TW	Feb 2016

drawing number	rev
STW-TCP-001	A

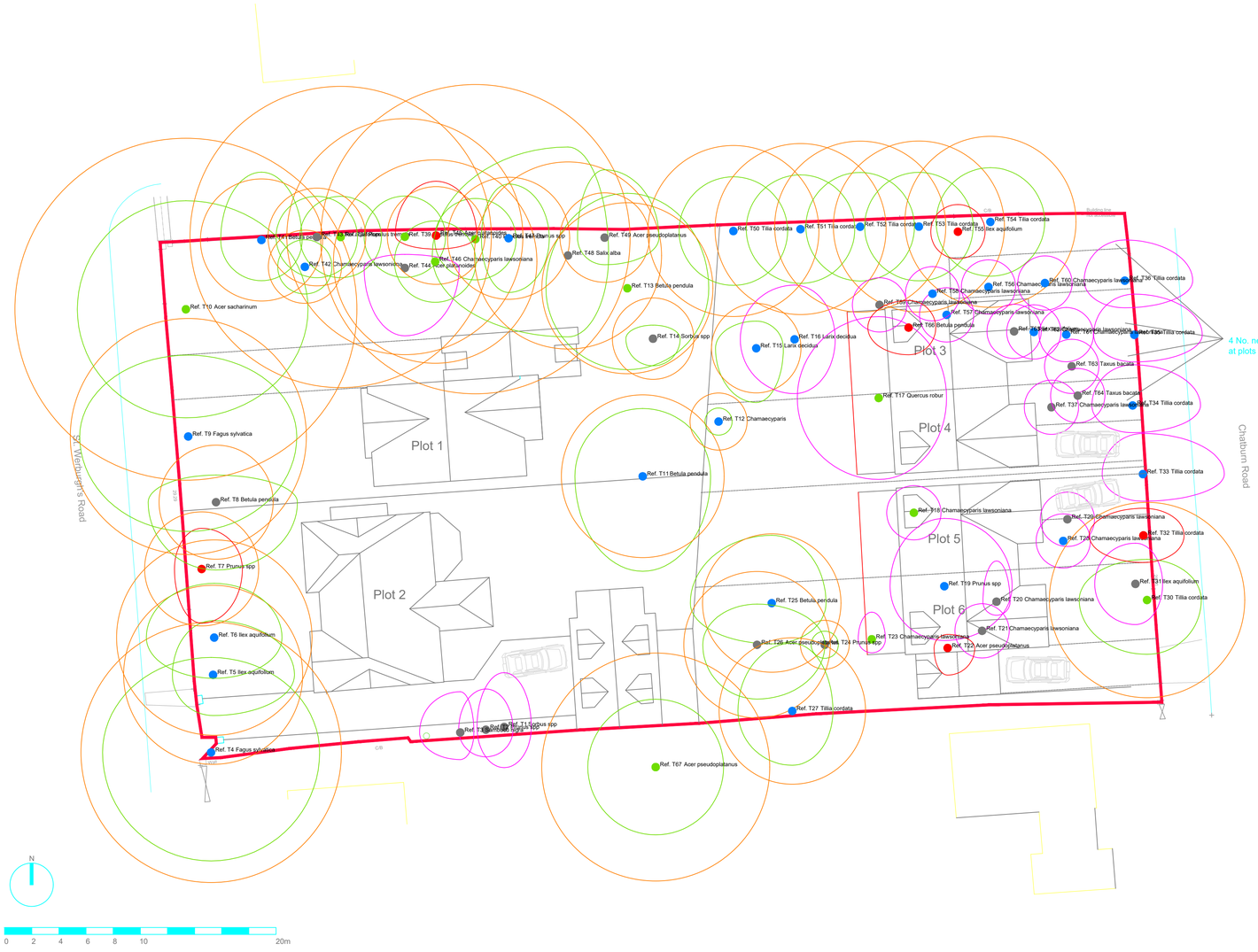

Copyright & Usage Notice

This drawing remains the the property & copyright of Christians Environmental Ltd until payment in full is received.

Any use of this drawing before payment is received unless by prior agreement will be deemed as misuse & will be pursued as necessary.

General Notice

This drawing to be read in conjunction with all other relevantinformation whether produced by Christians Environmental Ltd or by others. Any inconsistencies to be notified to the company immediately

DO NOT SCALE FROM THIS DRAWING. ALL DIMENSIONS TO BE CHECKED ON SITE

KEY:

- Retained Tree
- Tree to be Removed Due to the Proposal
- Tree to be Removed Due to Overall Poor Condition
- Retained Group
- Group to be Remvoed Due to the Proposal
- Group to be Removed Due to Poor Overall Condition
- Building and/or Topographical Feature
- Retained tree - extents of root protection area (RPA)

Meters

5 0 5 10

1:200

rev	date	description	by
C	June 2017	Tree Retention Plan	CEL-TW

Christians Ltd (Lancashire)
BREC
Nuttall Street
Blackburn
Lancashire
BB2 4JF
t: +44 (0) 1254 841790
e: info@christiansltd.com
w: www.christiansltd.com

Christians Ltd (Cumbria)
The Stable
Coat Flatt Hall
Tebay
Penrith
CA10 3SZ
t: +44 (0) 1539 234022
e: info@christiansltd.com
w: www.christiansltd.com

client
Calderpeel

project
St Werburghs

drawing title
Tree Retention Plan

scale	drawn	date
1:200 @ A1	CEL-TW	June 2017

drawing number
STW-TRP-001

rev
B

Copyright & Usage Notice

This drawing remains the the property & copyright of Christians Environmental Ltd until payment in full is received.

Any use of this drawing before payment is received unless by prior agreement will be deemed as misuse & will be pursued as necessary.

General Notice

This drawing to be read in conjunction with all other relevantinformation whether produced by Christians Environmental Ltd or by others. Any inconsistencies to be notified to the company immediately

DO NOT SCALE FROM THIS DRAWING. ALL DIMENSIONS TO BE CHECKED ON SITE

KEY:

- Proposed Tree Protection Fencing
- RPA Loss
- Retained Tree Canopy
- Retained Tree Root Protection Area

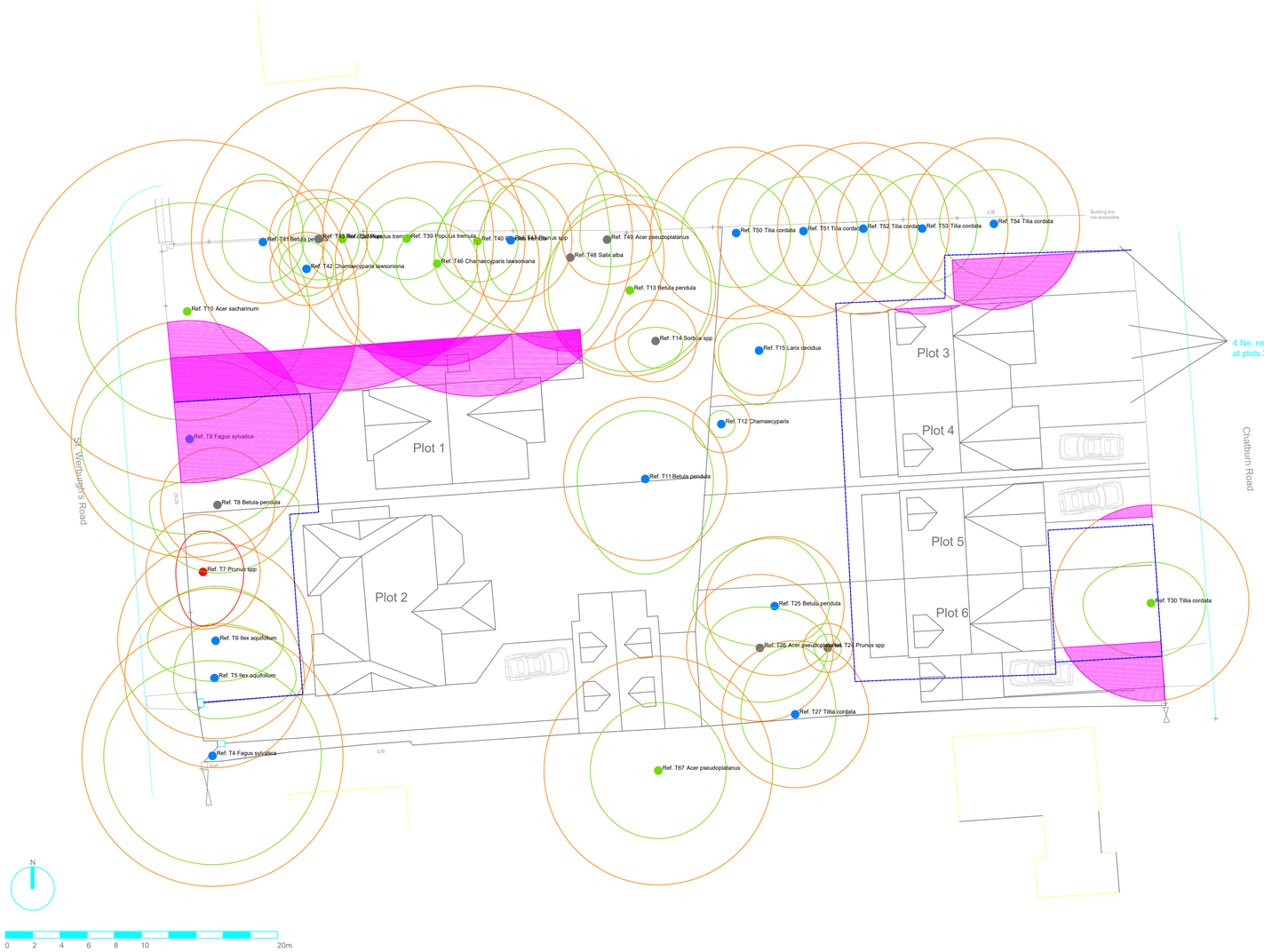

Meters

5 0 5 10

1:200

rev	date	description	by
C	June 2017	Tree Protection Plan	CEL-TW

Christians Ltd (Lancashire)
BREC
Nuttall Street
Blackburn
Lancashire
BB2 4JF

t: +44 (0) 1254 847790
e: info@christiansltd.com
w: www.christiansltd.com

Christians Ltd (Cumbria)
The Stable
Coat Flatt Hall
Tebay
Penrith
CA10 3SZ

t: +44 (0) 1539 234022
e: info@christiansltd.com
w: www.christiansltd.com

client
Calderpeel

project
St Werburghs

drawing title
Tree Protection Plan

scale	drawn	date
1:200 @ A1	CEL-TW	June 2017

drawing number	rev
STW-TPP-001	C

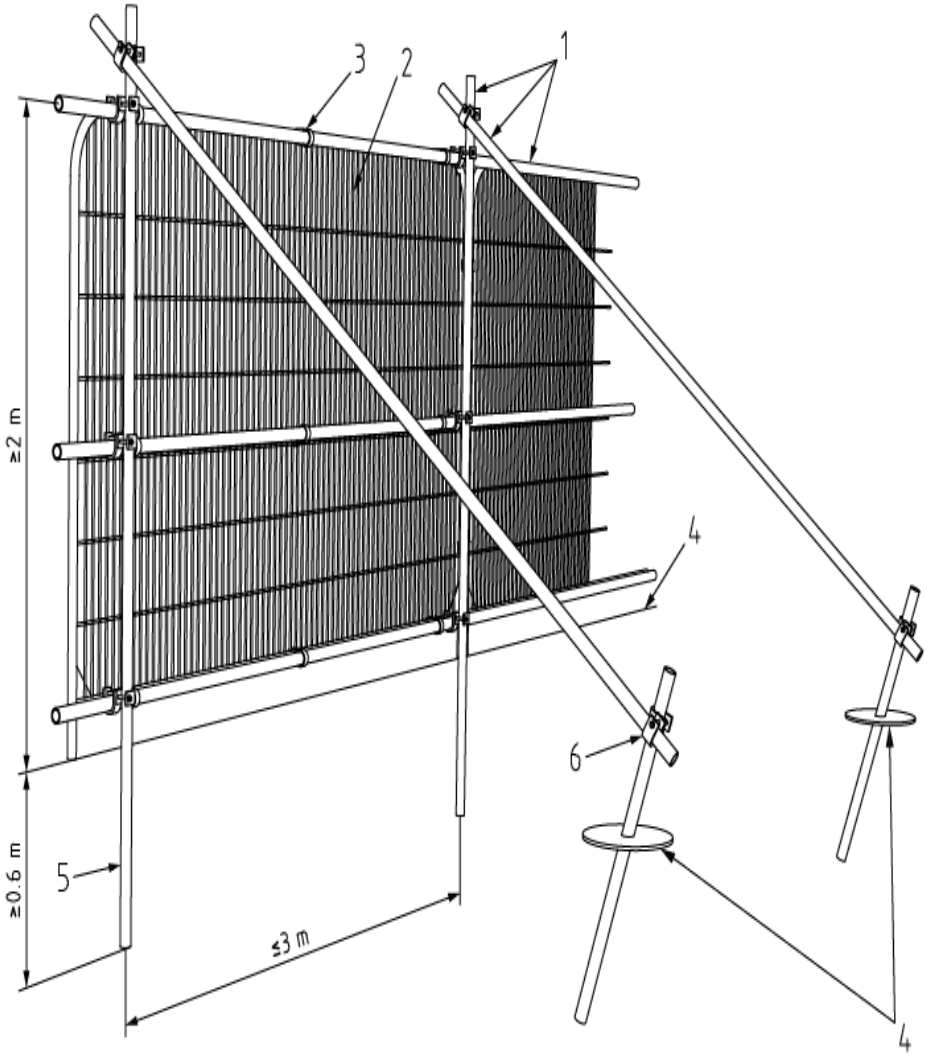

Key

1 Standard scaffold poles

2 Heavy gauge 2 m tall galvanized tube and welded mesh infill panels

3 Panels secured to uprights and cross-members with wire ties

4 Ground level

5 Uprights driven into the ground until secure (minimum depth 0.6 m)

6 Standard scaffold clamps

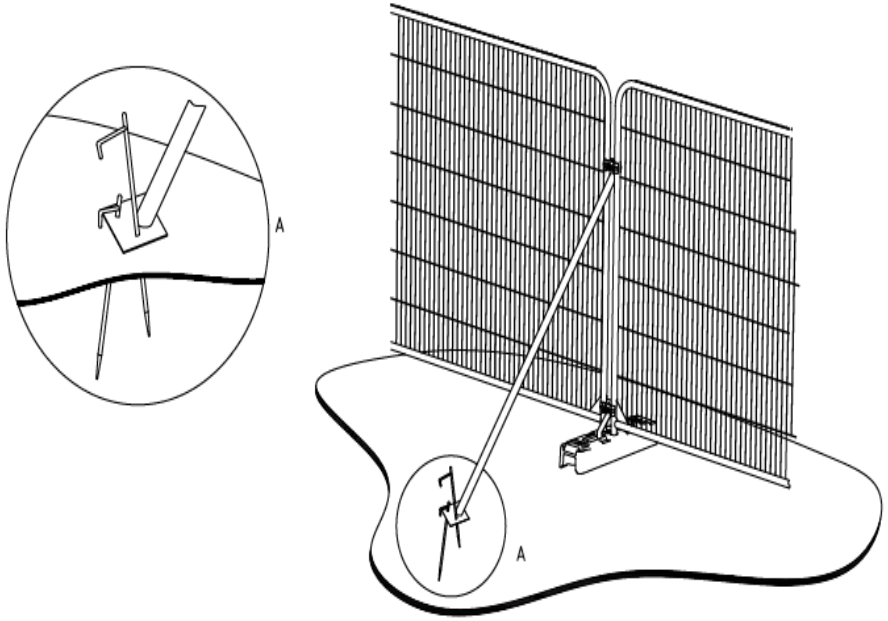

a) Stabilizer strut with base plate secured with ground pins

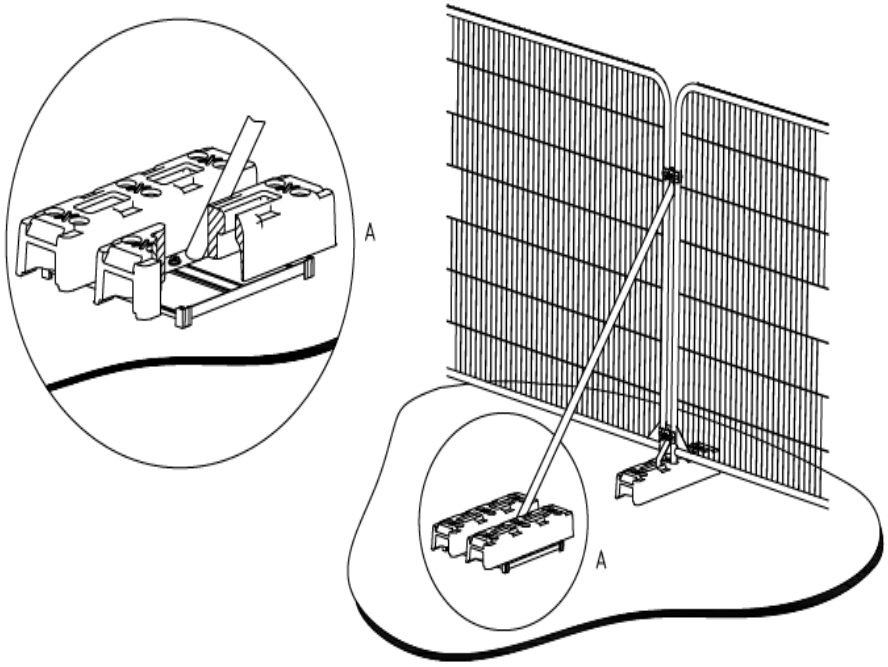

b) Stabilizer strut mounted on block tray

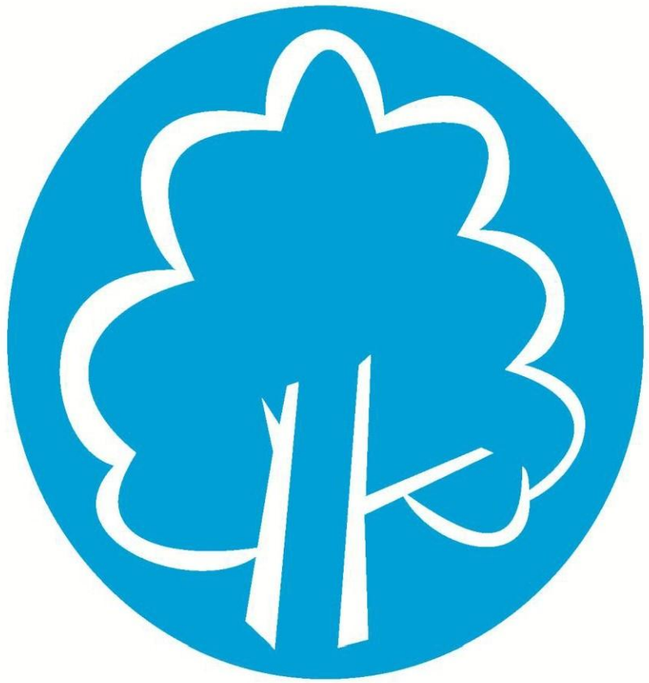

PROTECTIVE FENCING. THIS FENCING MUST BE MAINTAINED IN ACCORDANCE WITH THE APPROVED PLANS AND DRAWINGS FOR THIS DEVELOPMENT.



TREE PROTECTION AREA

KEEP OUT!

(TOWN & COUNTRY PLANNING ACT 1990)

TREES ENCLOSED BY THIS FENCE ARE PROTECTED BY PLANNING CONDITIONS AND/OR ARE THE SUBJECTS OF A TREE PRESERVATION ORDER.

CONTRAVENTION OF A TREE PRESERVATION ORDER MAY LEAD TO CRIMINAL PROSECUTION

ANY INCURSION INTO THE PROTECTED AREA MUST BE WITH THE WRITTEN PERMISSION OF THE LOCAL PLANNING AUTHORITY

Tree Protection Warning Sign

(Head Office) The Lighthouse, 12 Centenary Park, Coronet Way, Eccles, Salford, Manchester, M50 1RE
T: 0161 4061862 E: info@christiansltd.com Company Reg. No. 7514654 VAT No.109428515

CHRISTIANS ENVIRONMENTAL

Abscission. The shedding of a leaf or other short-lived part of a woody plant, involving the formation of a corky layer across its base; in some tree species twigs can be shed in this way

Abiotic. Pertaining to non-living agents; e.g. environmental factors

Absorptive roots. Non-woody, short-lived roots, generally having a diameter of less than one millimetre, the primary function of which is uptake of water and nutrients

Adaptive growth. In tree biomechanics, the process whereby the rate of wood formation in the cambial zone, as well as wood quality, responds to gravity and other forces acting on the cambium This helps to maintain a uniform distribution of mechanical stress

Adaptive roots. The adaptive growth of existing roots; or the production of new roots in response to damage, decay or altered mechanical loading

Adventitious shoots. Shoots that develop other than from apical, axillary or dormant buds; see also 'epicormic'

Anchorage. The system whereby a tree is fixed within the soil, involving cohesion between roots and soil and the development of a branched system of roots which withstands wind and gravitational forces transmitted from the aerial parts of the tree

Architecture. In a tree, a term describing the pattern of branching of the crown or root system

Axil. The place where a bud is borne between a leaf and its parent shoot

Bacteria. Microscopic single-celled organisms, many species of which break down dead organic matter, and some of which cause diseases in other organisms

Bark. A term usually applied to all the tissues of a woody plant lying outside the vascular cambium, thus including the phloem, cortex and periderm; occasionally applied only to the periderm or the phellem

Basidiomycotina (Basidiomycetes). One of the major taxonomic groups of fungi; their spores are borne on microscopic peg-like structures (basidia), which in many types are in turn borne on or within conspicuous fruit bodies, such as brackets or toadstools. Most of the principal decay fungi in standing trees are basidiomycetes

Bolling. A term sometimes used to describe pollard heads

Bottle-butt. A broadening of the stem base and buttresses of a tree, in excess of normal and sometimes denoting a growth response to weakening in that region, especially due to decay involving selective delignification

Bracing. The use of rods or cables to restrain the movement between parts of a tree

Branch:

- **Primary.** A first order branch arising from a stem
- **Lateral.** A second order branch, subordinate to a primary branch or stem and bearing sub-lateral branches
- **Sub-lateral.** A third order branch, subordinate to a lateral or primary branch, or stem and usually bearing only twigs

Branch bark ridge. The raised arc of bark tissues that forms within the acute angle between a branch and its parent stem

Branch collar. A visible swelling formed at the base of a branch whose diameter growth has been disproportionately slow compared to that of the parent stem; a term sometimes applied also to the pattern of growth of the cells of the parent stem around the branch base

Brown-rot. A type of wood decay in which cellulose is degraded, while lignin is only modified

Buckling. An irreversible deformation of a structure subjected to a bending load

Buttress zone. The region at the base of a tree where the major lateral roots join the stem, with buttress-like formations on the upper side of the junctions

Cambium. Layer of dividing cells producing xylem (woody) tissue internally and phloem (bark) tissue externally

Canker. A persistent lesion formed by the death of bark and cambium due to colonisation by fungi or bacteria

Canopy species. Tree species that mature to form a closed woodland canopy

Cleaning out. The removal of dead, crossing, weak, and damaged branches, where this will not damage or spoil the overall appearance of the tree

Compartmentalization. The confinement of disease, decay or other dysfunction within an anatomically discrete region of plant tissue, due to passive and/or active defences operating at the boundaries of the affected region

Compression strength. The ability of a material or structure to resist failure when subjected to compressive loading; measurable in trees with special drilling devices

Compressive loading. Mechanical loading which exerts a positive pressure; the opposite to tensile loading

Condition. An indication of the physiological vitality of the tree. Where the term 'condition' is used in a report, it should not be taken as an indication of the stability of the tree

Construction exclusion zone. Area based on the Root Protection Area (in square metres) to be protected during development, by the use of barriers and/or ground protection

Crown/Canopy. The main foliage bearing section of the tree

Crown lifting. The removal of limbs and small branches to a specified height above ground level

Crown thinning. The removal of a proportion of secondary branch growth throughout the crown to produce an even density of foliage around a well-balanced branch structure

Crown reduction/shaping. A specified reduction in crown size whilst preserving, as far as possible, the natural tree shape

Crown reduction/thinning. Reduction of the canopy volume by thinning to remove dominant branches whilst preserving, as far as possible the natural tree shape

Deadwood. Dead branch wood

Decurrent. In trees, a system of branching in which there is a well-defined central main stem, bearing branches which are limited in their length, diameter and secondary branching (cf. excurrent) In fungi with toadstools as fruit bodies, the description of gills which run some distance down the stem, rather than terminating abruptly

Defect. In relation to tree hazards, any feature of a tree which detracts from the uniform distribution of mechanical stress, or which makes the tree mechanically unsuited to its environment

Delamination. The separation of wood layers along their length, visible as longitudinal splitting

Dieback. The death of parts of a woody plant, starting at shoot-tips or root-tips

Disease. A malfunction in or destruction of tissues within a living organism, usually excluding mechanical damage; in trees, usually caused by pathogenic micro-organisms

Distal. In the direction away from the main body of a tree or subject organism (cf. proximal)

Dominance. In trees, the tendency for a leading shoot to grow faster or more vigorously than the lateral shoots; also the tendency of a tree to maintain a taller crown than its neighbours

Dormant bud. An axial bud which does not develop into a shoot until after the formation of two or more annual wood increments; many such buds persist through the life of a tree and develop only if stimulated to do so

Dysfunction. In woody tissues, the loss of physiological function, especially water conduction, in sapwood

DBH (Diameter at Breast Height). Stem diameter measured at a height of 1.5 metres (UK) or the nearest measurable point. Where measurement at a height of 1.5 metres is not possible, another height may be specified

Deadwood. Branch or stem wood bearing no live tissues. Retention of deadwood provides valuable habitat for a wide range of species and seldom represents a threat to the health of the tree. Removal of deadwood can result in the ingress of decay to otherwise sound tissues and climbing operations to access deadwood can cause significant damage to a tree. Removal of deadwood is generally recommended only where it represents an unacceptable level of hazard

Endophytes. Micro-organisms which live inside plant tissues without causing overt disease, but in some cases capable of causing disease if the

tissues become physiologically stressed, for example by lack of moisture

Epicormic shoot. A shoot having developed from a dormant or adventitious bud and not having developed from a first year shoot

Excrescence. Any abnormal outgrowth on the surface of tree or other organism

Excurrent. In trees, a system of branching in which the crown is borne on a number of major widely-spreading and secondarily branched limbs (cf. excurrent)

Felling licence. In the UK, a permit to fell trees in excess of a stipulated number of stems or volume of timber

Flush-cut. A pruning cut which removes part of the branch bark ridge and or branch-collar

Girdling root. A root which circles and constricts the stem or roots possibly causing death of phloem and/or cambial tissue

Guying a form of artificial support with cables for trees with a temporarily inadequate anchorage

Habit. The overall growth characteristics, shape of the tree and branch structure

Hazard beam. An upwardly curved part of a tree in which strong internal stresses may occur without being reduced by adaptive growth; prone to longitudinal splitting

Heartwood/false-heartwood/ripewood. Sapwood that has become dysfunctional as part of the natural aging processes

Heave. A term mainly applicable to a shrinkable clay soil which expands due to re-wetting after the felling of a tree which was previously extracting moisture from the deeper layers; also the lifting of pavements and other structures by root diameter expansion; also the lifting of one side of a wind-rocked root-plate

High canopy tree species. Tree species having potential to contribute to the closed canopy of a mature woodland or forest

Incipient failure. In wood tissues, a mechanical failure which results only in deformation or cracking, and not in the fall or detachment of the affected part

Included bark (ingrown bark). Bark of adjacent parts of a tree (usually forks, acutely joined branches or basal flutes) which is in face-to-face contact

Increment borer. A hollow auger, which can be used for the extraction of wood cores for counting or measuring wood increments or for inspecting the condition of the wood

Infection. The establishment of a parasitic micro-organism in the tissues of a tree or other organism

Internode. The part of a stem between two nodes; not to be confused with a length of stem which bear nodes but no branches

Lever arm. A mechanical term denoting the length of the lever represented by a structure that is free to move at one end, such as a tree or an individual branch

Lignin. The hard, cement-like constituent of wood cells; deposition of lignin within the matrix of cellulose microfibrils in the cell wall is termed Lignification

Lions tailing. A term applied to a branch of a tree that has few if any side-branches except at its end, and is thus liable to snap due to end-loading

Loading. A mechanical term describing the force acting on a structure from a particular source; e.g. the weight of the structure itself or wind pressure

Longitudinal. Along the length (of a stem, root or branch)

Lopping. A term often used to describe the removal of large branches from a tree, but also used to describe other forms of cutting

Mature Heights (approximate)**:**

- **Low maturing** – less than 8 metres high
- **Moderately high maturing** – 8 – 12 metres high
- **High maturing** – greater than 12 metres high

Micro drill. An electronic rotating steel probe, which when inserted into woody tissue provides a measure of tissue density

Minor deadwood. Deadwood of a diameter less than 25mm and or unlikely to cause significant harm or damage upon impact with a target beneath the tree

Mulch. Material laid down over the rooting area of a tree or other plant to help conserve moisture; a mulch may consist of organic matter or a sheet of plastic or other artificial material

Mycelium. The body of a fungus, consisting of branched filaments (hyphae)

Occluding tissues. A general term for the roll of wood, cambium and bark that forms around a wound on a woody plant (cf. wound wood)

Occlusion. The process whereby a wound is progressively closed by the formation of new wood and bark around it

Pathogen. A micro-organism which causes disease in another organism

Photosynthesis. The process whereby plants use light energy to split hydrogen from water molecules, and combine it with carbon dioxide to form the molecular building blocks for synthesizing carbohydrates and other biochemical products.

Phytotoxic. Toxic to plants

Pollarding. The removal of the tree canopy, back to the stem or primary branches. Pollarding may involve the removal of the entire canopy in one operation, or may be phased over several years. The period of safe retention of trees having been pollarded varies with species and individuals. It is usually necessary to re-pollard on a regular basis, annually in the case of some species.

Primary branch. A major branch, generally having a basal diameter greater than 0.25 x stem diameter

Primary root zone. The soil volume most likely to contain roots that are critical to the health and stability of the tree and normally defined by reference to Table 1 of BS5837 (1991) Guide for Trees in Relation to Construction.

Priority. Works may be prioritised, 1. = high, 5. = low

Probability. A statistical measure of the likelihood that a particular event might occur.

Proximal. In the direction towards from the main body of a tree or other living organism (cf. distal)

Pruning. The removal or cutting back of twigs or branches, sometimes applied to twigs or small branches only, but often used to describe most activities involving the cutting of trees or shrubs

Radial. In the plane or direction of the radius of a circular object such as a tree stem

Rams-horn. In connection with wounds on trees, a roll of occluding tissues which has a spiral structure as seen in cross-section

Rays. Strips of radially elongated parenchyma cells within wood and bark. The functions of rays include food storage, radial translocation and contributing to the strength of wood

Red-rot. A form of decay in which reddish pigments are present but which is biochemically a white-rot; not to be confused with brown-rots which sometimes also have a reddish-brown colour

Reactive Growth/Reaction Wood. Production of woody tissue in response to altered mechanical loading; often in response to internal defect or decay and associated strength loss (cf. adaptive growth)

Removal of dead wood. Unless otherwise specified, this refers to the removal of all accessible dead, dying and diseased branchwood and broken snags

Removal of major dead wood. The removal of, dead, dying and diseased branchwood above a specified size

Respacing. Selective removal of trees from a group or woodland to provide space and resources for the development of retained trees.

Residual wall. The wall of non-decayed wood remaining following decay of internal stem, branch or root tissues

Root-collar. The transitional area between the stem/s and roots

Root-collar examination. Excavation of surfacing and soils around the root-collar to assess the structural integrity of roots and/or stem

Root protection area. An area of ground surrounding a tree that contains sufficient rooting volume to ensure the tree's survival. Calculated with reference to Table 2 of BS5837 (2005) and shown in plan form in square metres

Root zone. Area of soils containing absorptive roots of the tree/s described

microscopic and dispersed in air or water. The **Primary** root zone is that which we consider of primary importance to the physiological well-being of the tree

Sapwood. Living xylem tissues

Secondary branch. A branch, generally having a basal diameter of less than 0.25 x stem diameter

Selective delignification. A kind of wood decay (white-rot) in which lignin is degraded faster than cellulose

Shedding. In woody plants, the normal abscission, rotting off or sloughing of leaves, floral parts, twigs, fine roots and bark scales

Silvicultural thinning. Removal of selected trees to favour the development of retained specimens to achieve a management objective

Simultaneous white-rot. A kind of wood decay in which lignin and cellulose are degraded at about the same rate

Snag. In woody plants, a portion of a cut or broken stem, branch or root which extends beyond any growing-point or dormant bud; a snag usually tends to die back to the nearest growing point

Soft-rot. A kind of wood decay in which a fungus degrades cellulose within the cell walls, without any general degradation of the wall as a whole

Spores. Propagules of fungi and many other life-forms; most spores are
Shrub species. Woody perennial species forming the lowest level of woody plants in a woodland and not normally considered to be trees

Sporophore. The spore bearing structure of fungi

Sprouts. Adventitious shoot growth erupting from beneath the bark

Stem/s. The main supporting structure/s, from ground level up to the first major division into branches

Stress. In plant physiology, a condition under which one or more physiological functions are not operating within their optimum range, for example due to lack of water, inadequate nutrition or extremes of temperature

Stress. In mechanics, the application of a force to an object

Stringy white-rot. The kind of wood decay produced by selective delignification

Storm. A layer of tissue which supports the fruit bodies of some types of fungi, mainly ascomycetes

Structural roots. Roots, generally having a diameter greater than ten millimetres, and contributing significantly to the structural support and stability of the tree

Subsidence. In relation to soil or structures resting in or on soil, a sinking due to shrinkage when certain types of clay soil dry out, sometimes due to extraction of moisture by tree roots

Subsidence. In relation to branches of trees, a term that can be used to describe a progressive downward bending due to increasing weight

Taper. In stems and branches, the degree of change in girth along a given length

Target canker. A kind of perennial canker, containing concentric rings of dead occluding tissues

Targets. In tree risk assessment (with slight misuse of normal meaning) persons or property or other things of value which might be harmed by mechanical failure of the tree or by objects falling from it

Topping. In arboriculture, the removal of the crown of a tree, or of a major proportion of it

Torsional stress. Mechanical stress applied by a twisting force

Translocation. In plant physiology, the movement of water and dissolved materials through the body of the plant

Transpiration. The evaporation of moisture from the surface of a plant, especially via the stomata of leaves; it exerts a suction which draws water up from the roots and through the intervening xylem cells

Understory. A layer of vegetation beneath the main canopy of woodland or forest or plants forming this

Understory tree species. Tree species not having potential to attain a size at which they can contribute to the closed high canopy of a woodland

Vascular wilt. A type of plant disease in which water-conducting cells become dysfunctional

Vessels. Water-conducting cells in plants, usually wide and long for hydraulic efficiency; generally not present in coniferous trees

Veteran tree. A loosely defined term for an old specimen that is of interest biologically, culturally or aesthetically because of its age, size or condition and which has usually lived longer than the typical upper age range for the species concerned

White-rot. A range of kinds of wood decay in which lignin, usually together with cellulose and other wood constituents, is degraded

Wind exposure. The degree to which a tree or other object is exposed to wind, both in terms of duration and velocity

Wind pressure. The force exerted by a wind on a particular object

Wind throw. The blowing over of a tree at its roots

Wound dressing. A general term for sealants and other materials used to cover wounds in the hope of protecting them against desiccation and infection; only of proven value against fresh wound parasites

Woundwood. Wood with atypical anatomical features, formed in the vicinity of a wound'