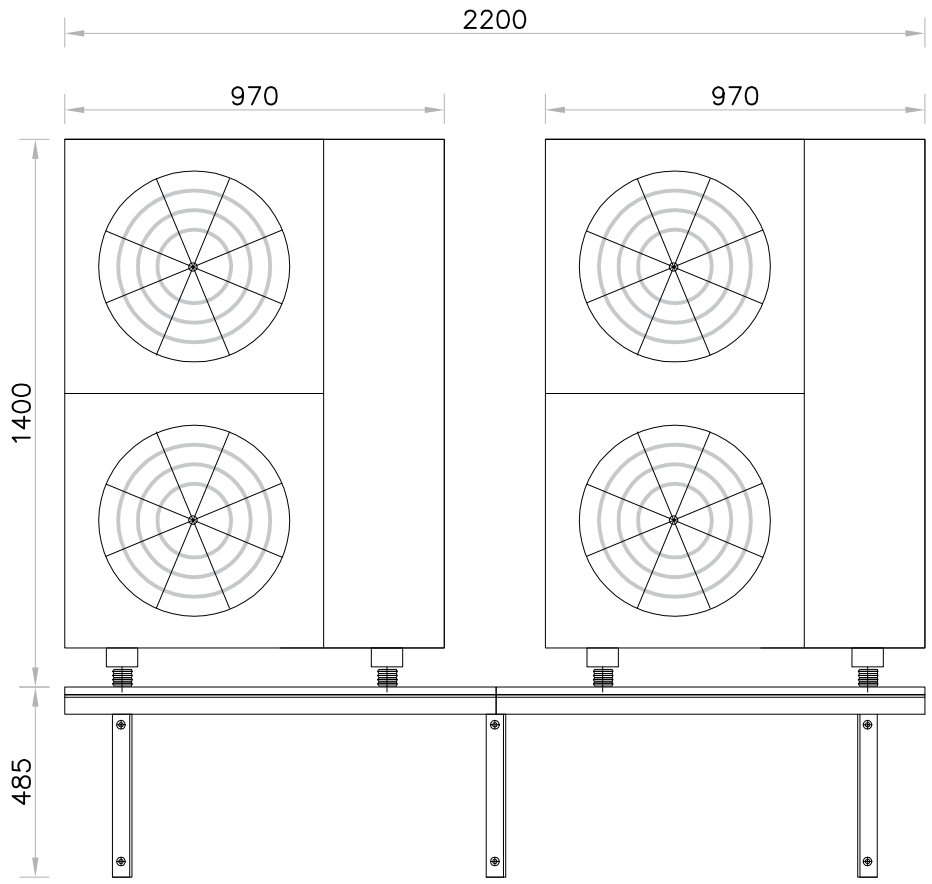

FRONT ELEVATION

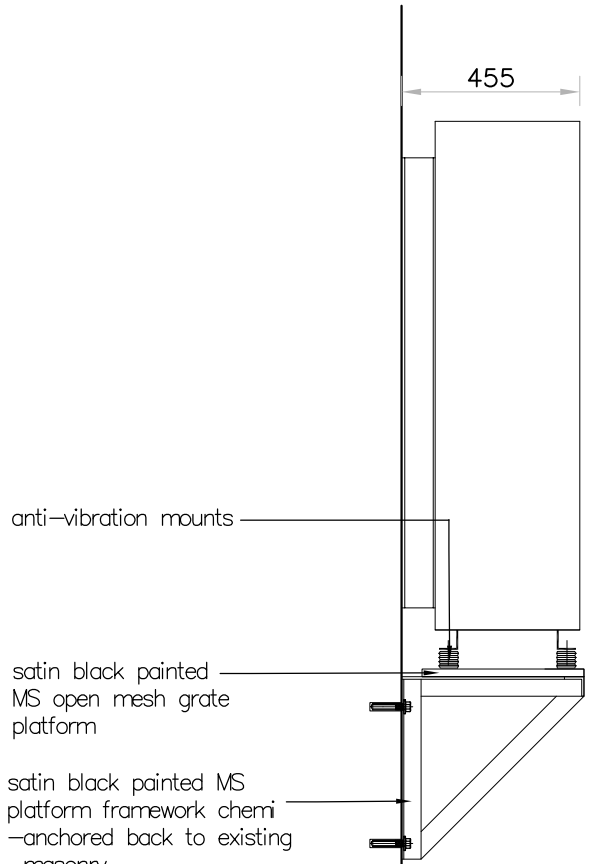

SIDE ELEVATION

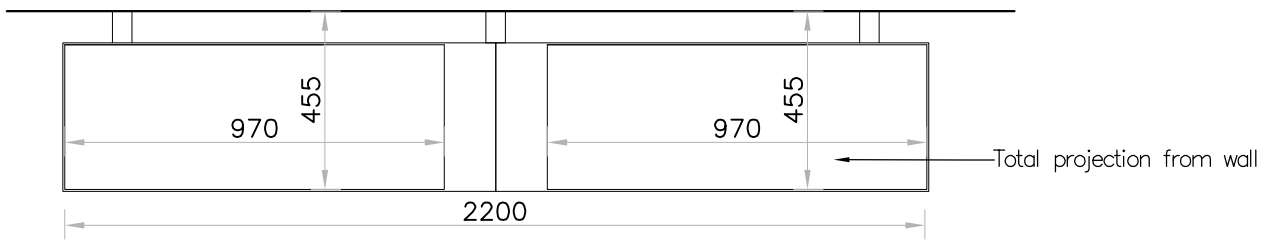

PLAN

0 — 1m

MITSUBISHI HEAVY INDUSTRIES, LTD.

amp

PAC micro inverter 3Ph outdoor unit (FDC**VS)

Product Code: **FDC200VS**

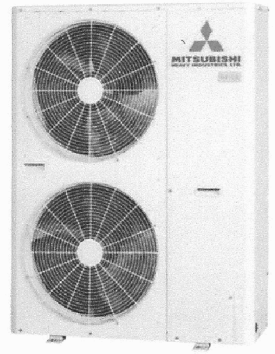

unit details

MODEL NUMBER		FDC200VS
nominal cooling*	kW	20.0
nominal heating*	kW	22.4
height	mm	1300
width	mm	970
depth	mm	370
weight	kg	122.0
operating range - cooling		43°C to -15°C
operating range - heating		20°C to -15°C
sound pressure level - cooling	dB(A)	57
sound pressure level - heating	dB(A)	57
pipe connection size - gas	in	7/8" (conditions apply)
pipe connection size - liquid	in	3/8" (conditions apply)
max pipe run**	m	70
max height difference**	m	30 (15 if outdoor below)
refrigerant		R410A
precharged for**	m	30
factory charge	kg	5.4
additional charge**	g/m	120
suitable for replacement tech.		yes
power supply	V-Ph-Hz	400 - 3 - 50
suggested fuse size**	A	25A per phase
interconnecting cables		3 core + E

* exact cooling and heating capacities will depending on connected indoor unit(s)

** data correct for one to one systems, details may change for twin, triple and quad configurations, please contact amp for confirmation

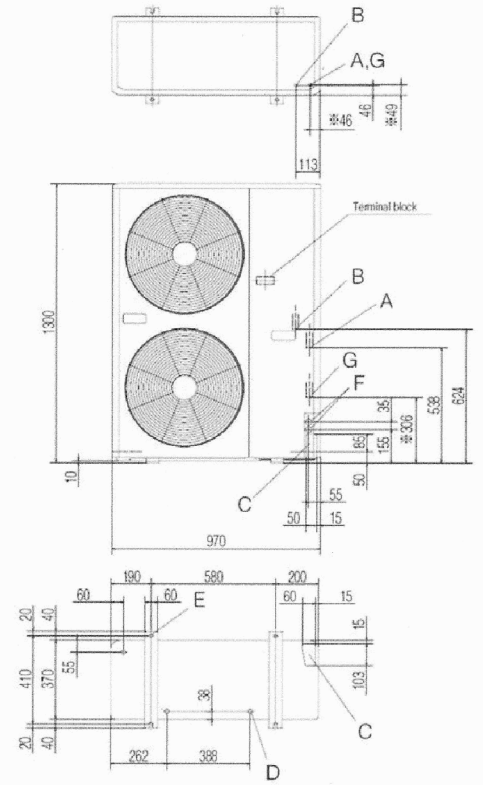

allowable pipe sizes for replacement technology

LIQUID	GAS
1/2"	7/8"
1/2"	1 1/8"
5/8"	7/8"
5/8"	1 1/8"

subject to the existing pipe sizes additional pipework and capacity limitations may apply, contact amp for details

for further information visit www.ampair.co.uk

amp air conditioning ltd | www.ampair.co.uk | t 01707 378670
blenheim house, blenheim court, brownfields, welwyn garden city, hertfordshire AL7 1AD

NOTES

1. On no account may this drawing be scaled.
2. Any discrepancy to be reported to the Contract Administrator immediately
3. The Contractor must check all dimensions on site prior to placing work in hand and/or ordering any materials or work.
4. This drawing is copyright of propertysign ltd t/a studio_neo it may not be reproduced, or part reproduced without the express consent of propertysign

Drawing Status

- ☐ PRELIMINARY FOR APPROVAL
- ☐ AGREED LAYOUT -SIGNED OFF
- ☒ PLANNING DRAWING
- ☐ BUILDING CONTROL DRAWING
- ☐ TENDER DRAWING
- ☐ CONTRACT DRAWING
- ☐ CONSTRUCTION DRAWING
- ☐ AS-BUILT DRAWING

Project

14 LITTLE LEVER STREET
MANCHESTER NQ

Drawing Title

DETAILS OF AIR CONDITIONING CONDENSERS

Scale: 1:20 @ A3

Date: 14.03.17.

Drawing No.: 2237/A5-01

Revision:

Revision Details

studio_neo
Architects

3 Bridgewater Street
Lymm
Cheshire
WA13 0AB

t. +44(0)1925 752225
e. steve@studio-neo.co.uk
www.studio-neo.co.uk