Maximus Networks Ltd Telephone Kiosk

PLANNING AND
BUILDING CONTROL
12 MAY 2017

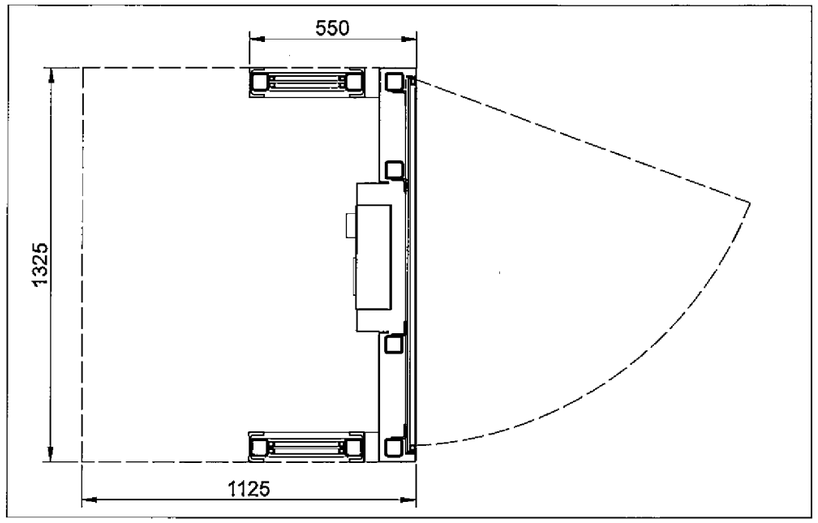

01 Plan

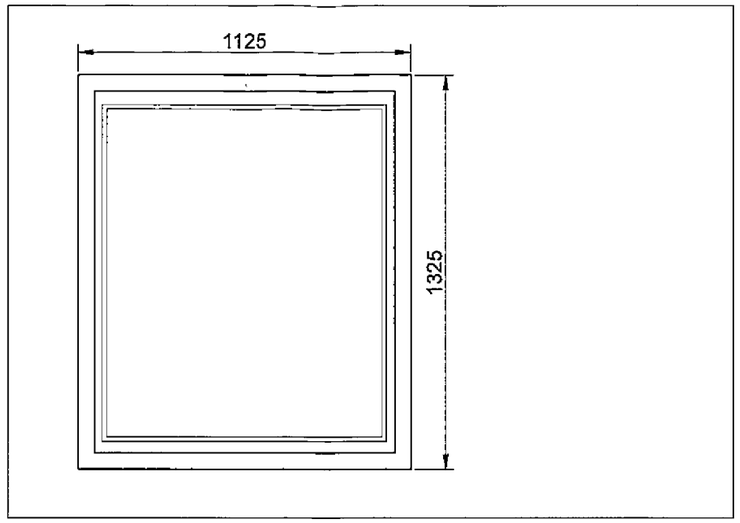

02 Roof Plan

Notes

Drawing Scale: 1:20 @A3

Materials Used:
PPC Steel Frame
PPC Steel Casings
Clear Polycarbonate
8mm Toughened glass
Solar Panel to roof

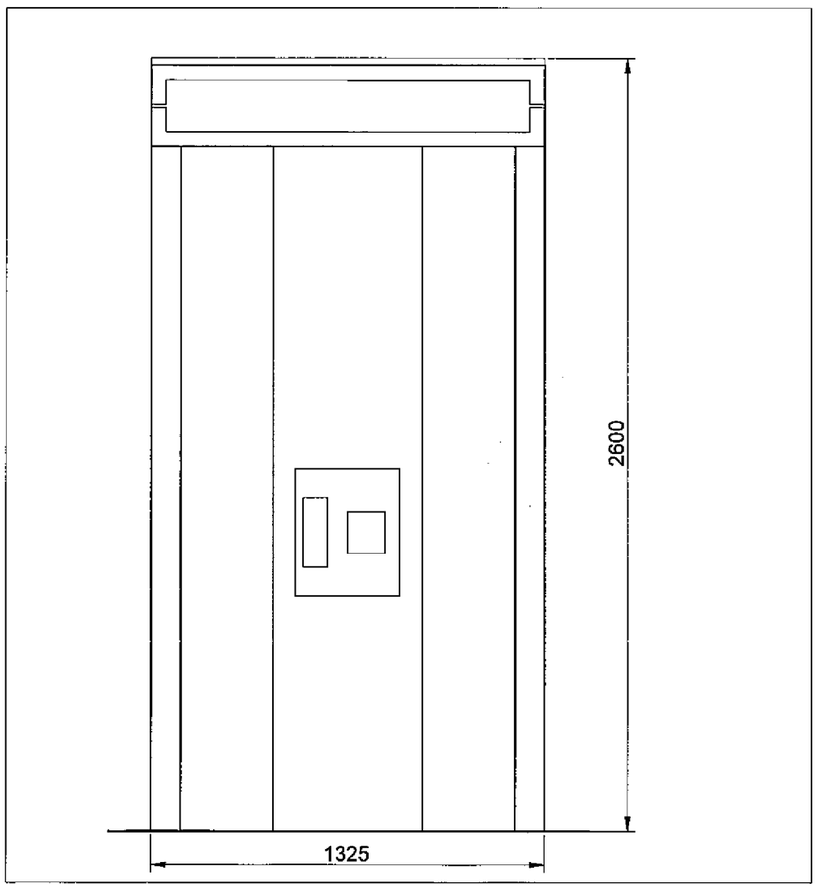

03 Front Elevation

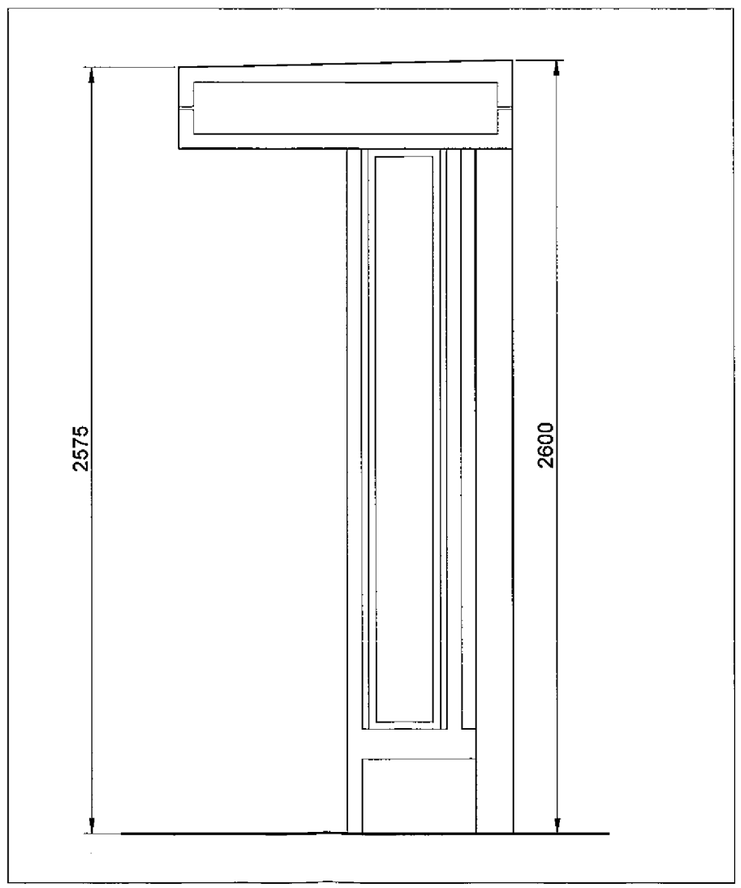

04 Side Elevation

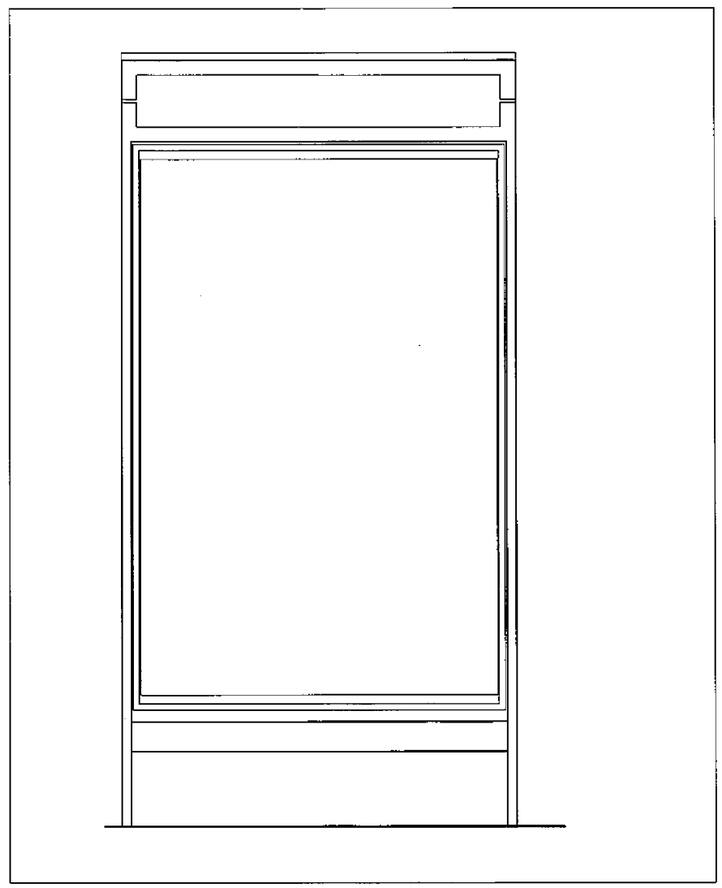

05 Rear Elevation