This Drawing is Copyright
DO NOT SCALE FROM THIS DRAWING
PAPER SIZE A1

NOTES

REVISIONS	DATE

DWG TITLE	PV ROOF PLAN
JOB	LULLINGTON ROAD WYTHENSHAWE, Manchester M23
CLIENT	W C H G
SCALE	1:100 @ A1
DWG No.	1841/110
DRAWN	KD
DATE	07.07.17

B Y A

ARCHITECTS . PROJECT MANAGERS . PROPERTY CONSULTANTS . CDM PLANNING CONSULTANTS

B Y A Limited
Alina House,10 St Vincent Street, Liverpool, L3 5XW
Tel: 0151 708 6121 Fax: 0151 708 9141

ROOF PLAN UNIT 1

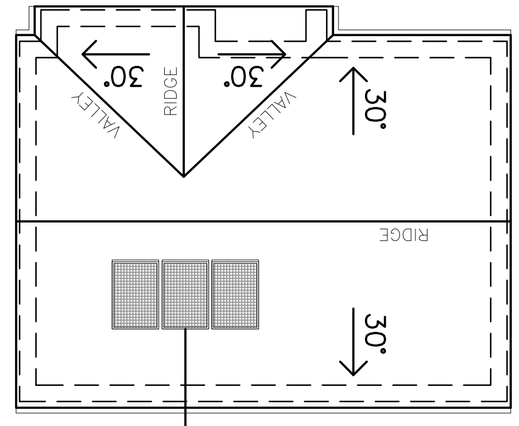

Each PV system will comprise of 3x 280W JA Solar all black modules giving a size of 0.84kWp per system

ROOF PLAN UNITS 2–4

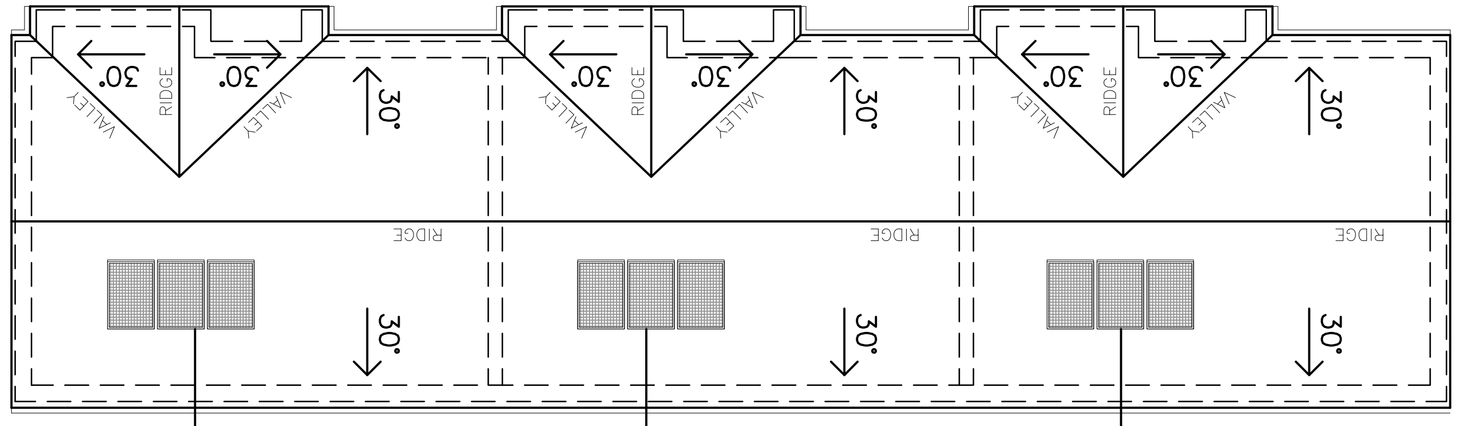

Each PV system will comprise of 3x 280W JA Solar all black modules giving a size of 0.84kWp per system

Each PV system will comprise of 3x 280W JA Solar all black modules giving a size of 0.84kWp per system

Each PV system will comprise of 3x 280W JA Solar all black modules giving a size of 0.84kWp per system