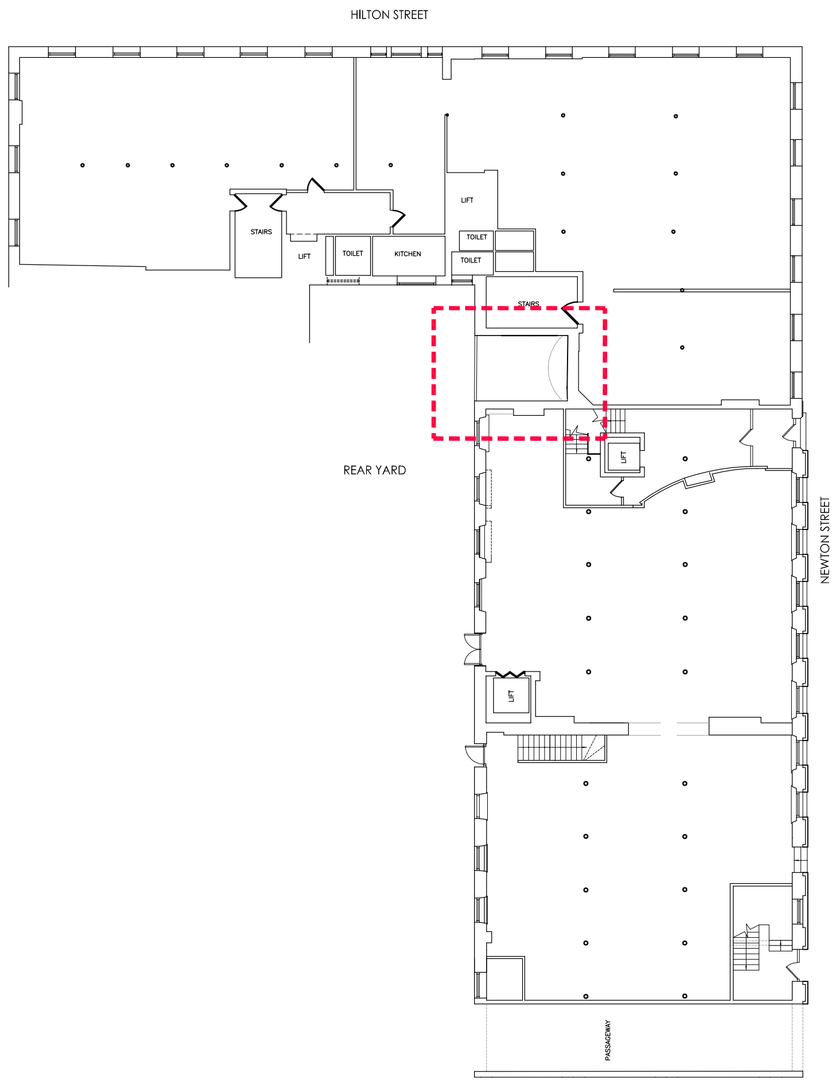

CONTEXT PLAN, EXISTING scale 1:100

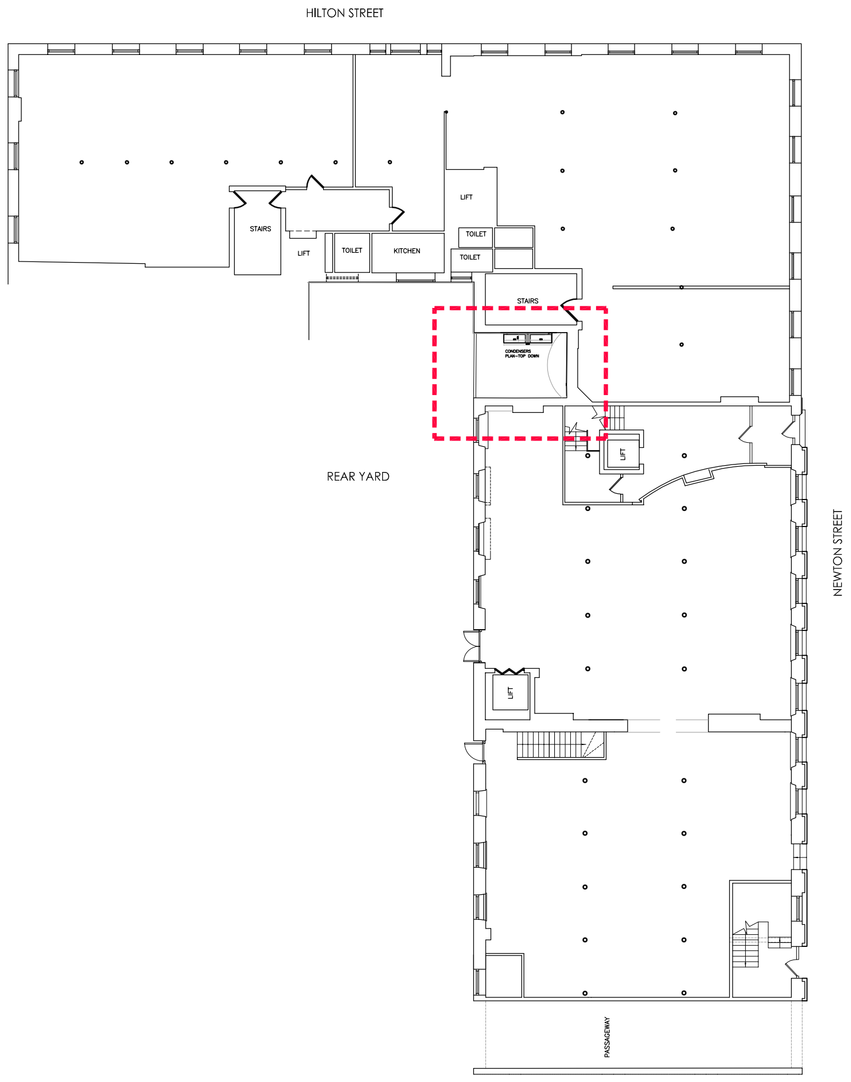

CONTEXT PLAN, PROPOSED scale 1:100



PHOTOMONTAGE OF CONDENSER PLATFORM+CONDENSERS INSIDE FACADE ARCH. Existing historic (non-original) timber cross member and bird mesh screen assist in reducing the visual impact of the new equipment.



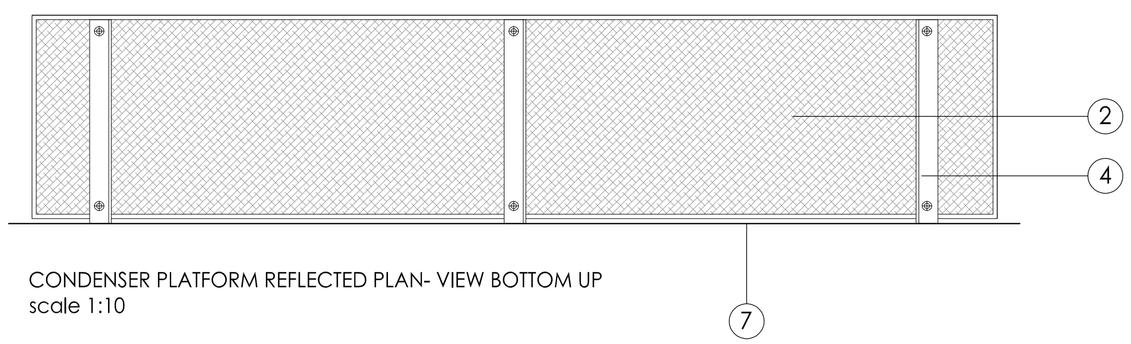

CONDENSER PLATFORM REFLECTED PLAN- VIEW BOTTOM UP scale 1:10

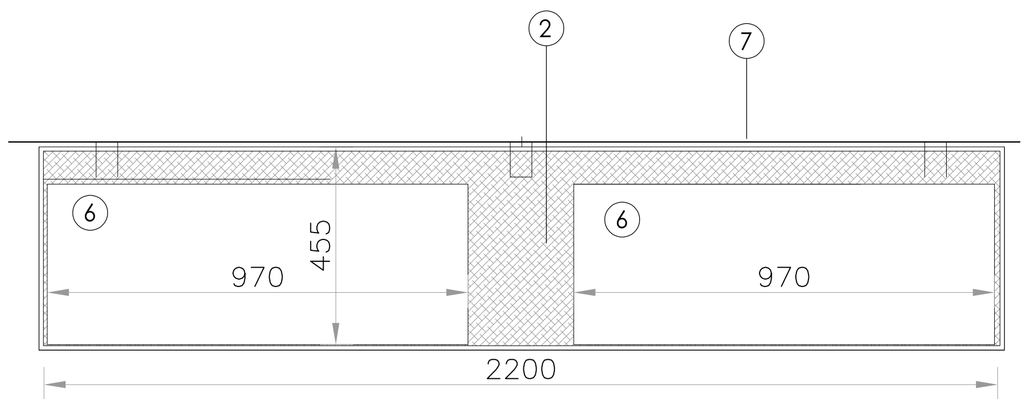

CONDENSER PLATFORM PLAN- VIEW TOP DOWN scale 1:10

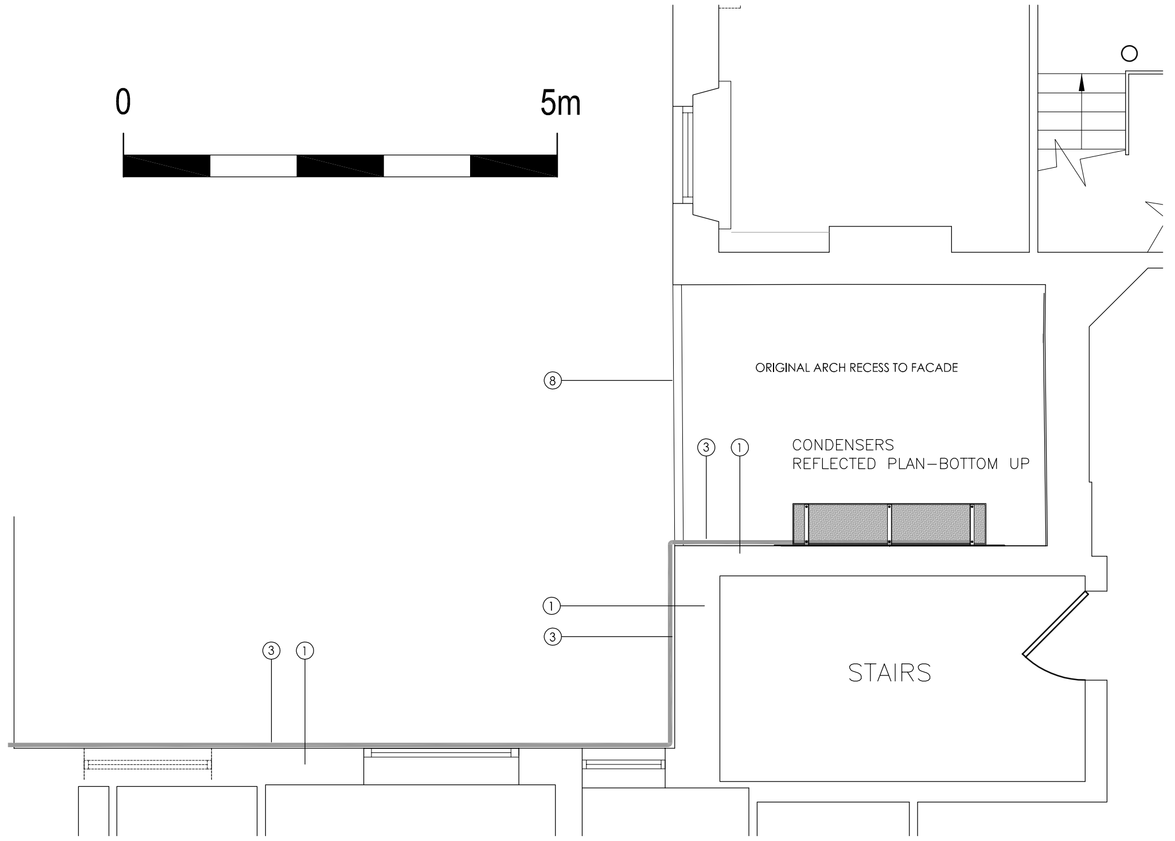

PROPOSED REFLECTED PLAN- VIEW BOTTOM UP scale 1:50

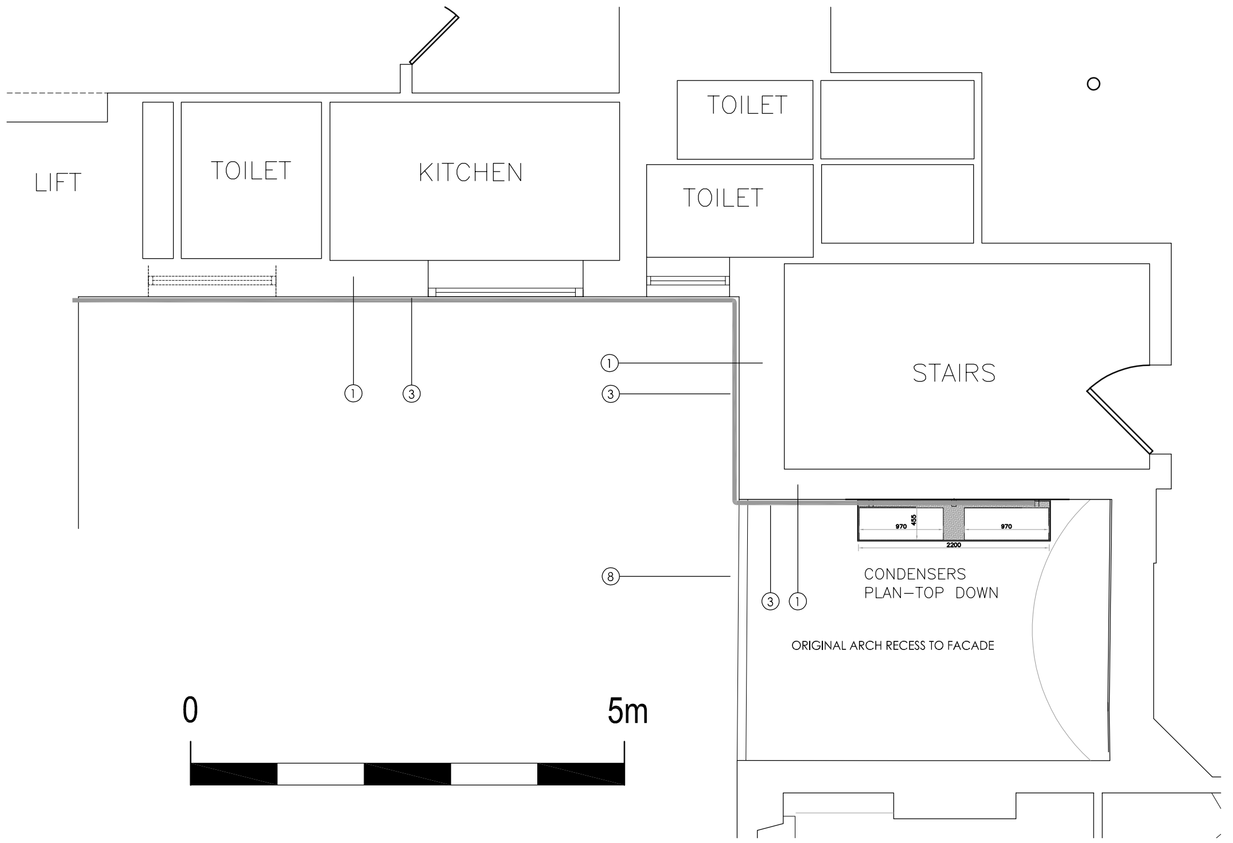

PROPOSED PLAN- VIEW TOP DOWN scale 1:50

5



NOTES

1. On no account may this drawing be scaled.
2. Any discrepancy to be reported to the Contract Administrator immediately
3. The Contractor must check all dimensions on site prior to placing work in hand and/or ordering any materials or work.
4. This drawing is copyright of propertysign ltd t/a studio_neo
it may not be reproduced, or part reproduced without the express consent of propertysign

Drawing Status

- ☐ PRELIMINARY FOR APPROVAL
- ☐ AGREED LAYOUT -SIGNED OFF
- ■ PLANNING DRAWING
- ☐ BUILDING CONTROL DRAWING
- ☐ TENDER DRAWING
- ☐ CONTRACT DRAWING
- ☐ CONSTRUCTION DRAWING
- ☐ AS-BUILT DRAWING

1. EXISTING ORIGINAL EXTERNAL MASONRY WALL
2. PROPOSED NEW SATIN BLACK OPEN MESH GRATE PLATFORM SET IN SATIN BLACK MS FRAMEWORK WITH SATIN BLACK MS SUPPORT LEG BRACKETS FIXED TO EXISTING ORIGINAL WALL WITH 16MM DIA CHEMICAL ANCHORS
3. PROPOSED NEW DARK GREY INSULATED CONDENSER PIPE RUNS FIXED TO ORIGINAL WALL (BELOW WINDOWS SHOWN IN PLAN) RUNNING ALONGSIDE EXISTING NON-ORIGINAL TELECOM LINES
4. PROPOSED NEW CONDENSER PLATFORM SUPPORT BRACKETS
5. PROPOSED NEW CHEMICAL ANCHORS, BOLT ENDS PAINTED BLACK TO MATCH FRAME
6. PROPOSED NEW CONDENSER WITH SPACE AT REAR FOR PIPEWORK
7. ORIGINAL WALL FACE
8. HISTORIC (NON-ORIGINAL) TIMBER BEAM AT MID-ARCH LEVEL. This was installed historically to carry cabled services but is not part of the original building

Project

REAR OF 41A
HILTON STREET
MANCHESTER NQ

Drawing Title

PROPOSED CONDENSERS
PLAN VIEWS IN CONTEXT
(SITED TO THE REAR OF 41A HILTON STREET)

Scale	Date
as noted @ A1	05.07.17.
Drawing No.	Revision
2237/A5-02	

Revision Details

studio_neo
Architects

3 Bridgewater Street
Lymm
Cheshire
WA13 0AB

t. +44(0)1925 752225
e. steve@studio-neo.co.uk
www.studio-neo.co.uk