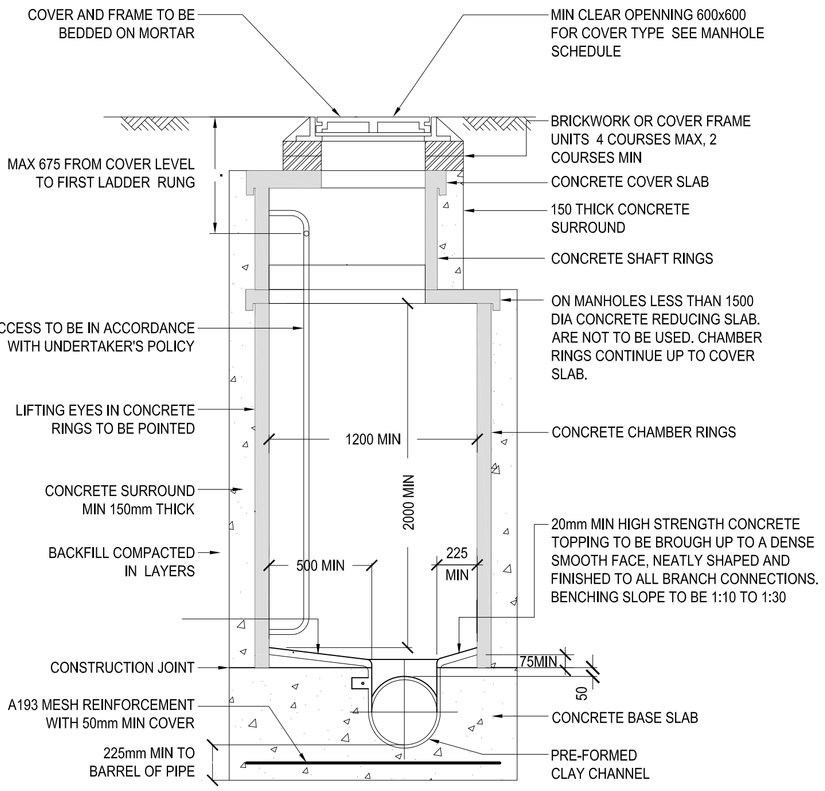

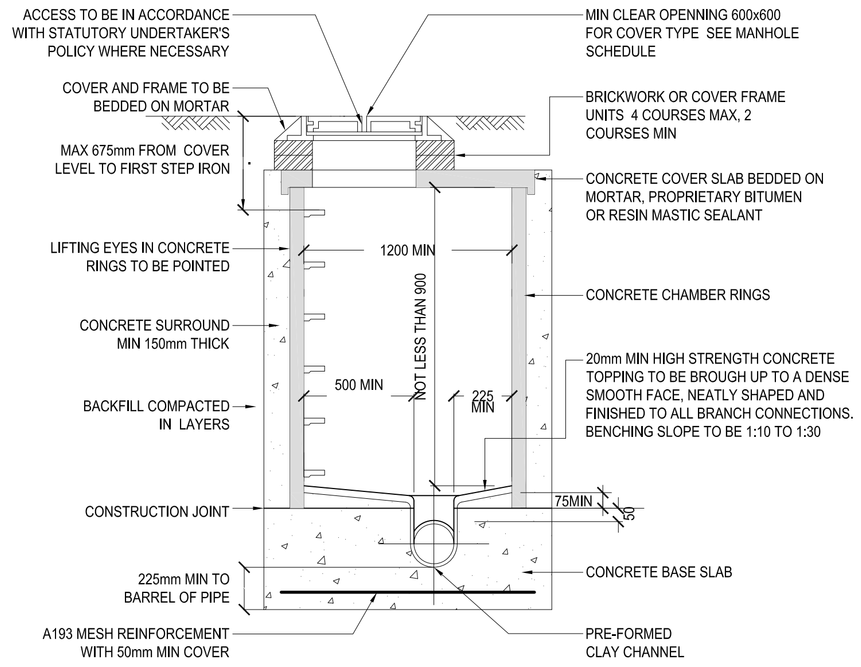

DIA OF LARGEST PIPE IN MANHOLE (mm)	INTERNAL DIA OF MANHOLES
LESS THAN 375	1200 (1050 WHERE DP TO SOFFIT IS 1.35-1.5m)
375 - 450	1350
500 - 700	1500
750 - 900	1800
> 900	CONSULT UNDERTAKER

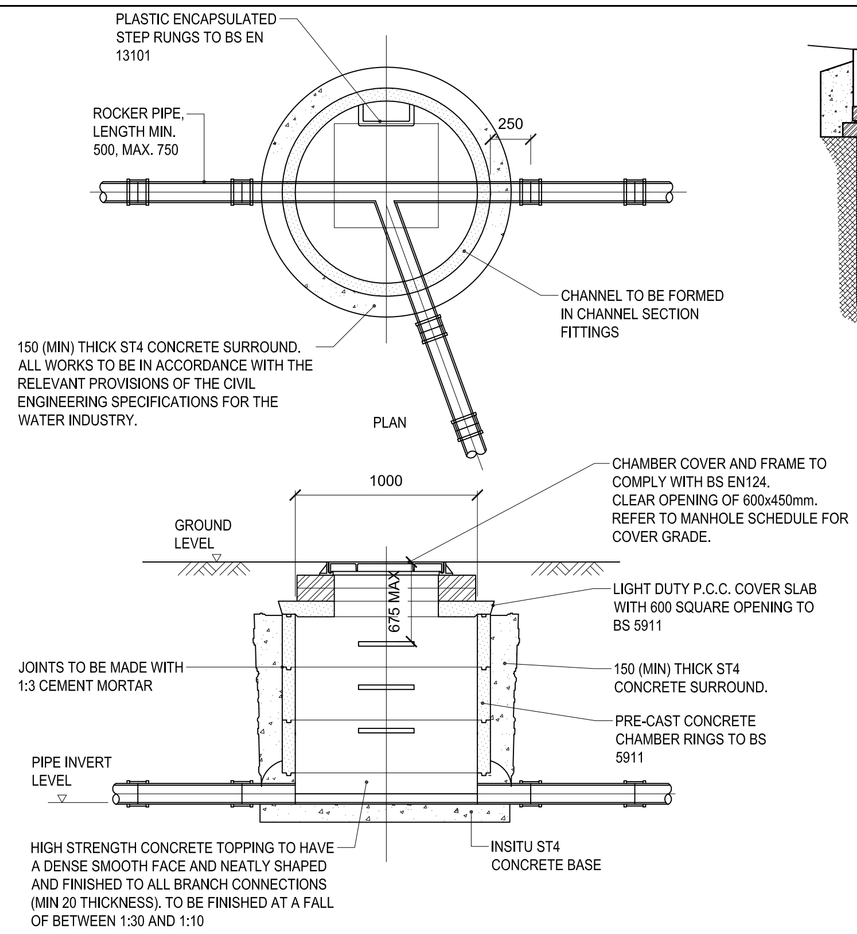

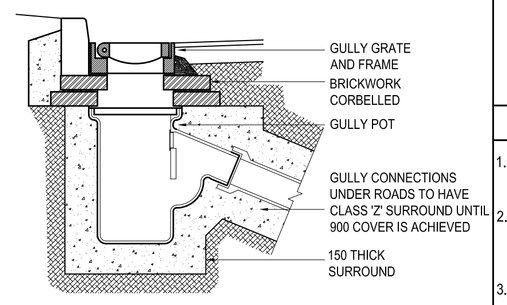

GULLY FOR ROADS AND CAR PARKS

SCALE 1:20

BUILDING DESIGN PARTNERSHIP SHALL HAVE NO RESPONSIBILITY FOR ANY USE MADE OF THIS DOCUMENT OTHER THAN FOR THAT WHICH IT WAS PREPARED AND ISSUED.

ALL DIMENSIONS SHOULD BE CHECKED ON SITE.

DO NOT SCALE FROM THIS DRAWING.

ANY DRAWING ERRORS OR DIVERGENCES SHOULD BE BROUGHT TO THE ATTENTION OF BUILDING DESIGN PARTNERSHIP AT THE ADDRESS SHOWN BELOW.

NOTES

1. ALL DIMENSIONS ARE IN MILLIMETRES UNLESS OTHERWISE STATED.
2. THIS DRAWING IN FOR INFORMATION ONLY AND SHOULD BE READ IN CONJUNCTION WITH OTHER RELEVANT DESIGN DRAWINGS/SPECIFICATIONS.
3. SERVICES ARE PRESENT IN THE AREA. CONTRACTOR TO ESTABLISH THE PRECISE LINE AND DEPTH OF ALL SERVICES PRIOR TO COMMENCING ANY EXCAVATION WORKS.

TYPE A
TYPICAL MANHOLE DETAIL - DEPTH TO SOFFIT 3 TO 6 METRES

SCALE 1:25

TYPE B
TYPICAL MANHOLE DETAIL - DEPTH TO SOFFIT 1.5 TO 3.0 METRES

SCALE 1:25

INSPECTION CHAMBER (IC) 1.0 TO 1.5m DEEP

SCALE 1:25

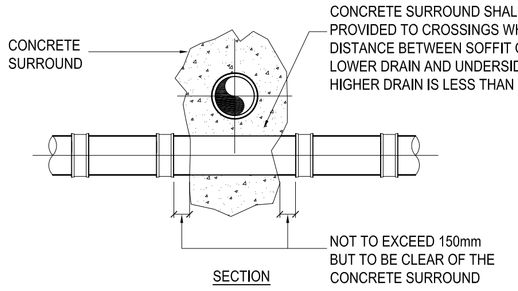

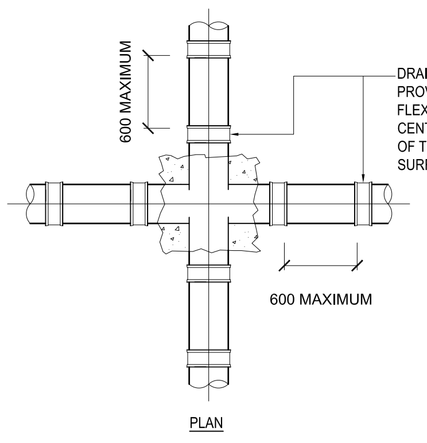

TYPICAL DETAIL OF PIPE CROSSOVER

(NTS)

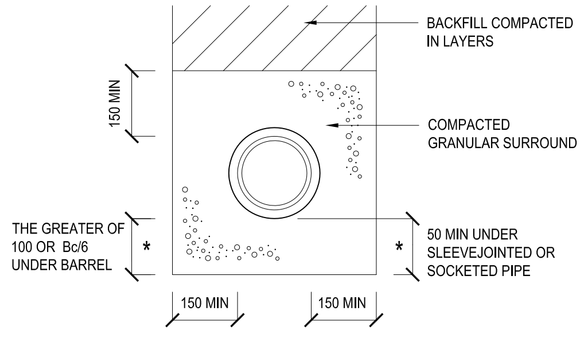

CLASS S GRANULAR SURROUND

WHERE DEPTH OF COVER TO PIPE SOFFIT IS GREATER THAN 900mm IN TRAFFICKED AREAS AND 600mm IN LANDSCAPED/ PEDESTRIAN AREAS
SCALE 1:10

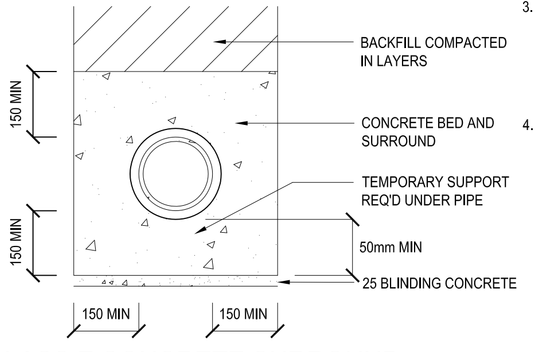

CLASS Z CONCRETE SURROUND

WHERE DEPTH OF COVER TO PIPE SOFFIT IS LESS THAN 900mm IN TRAFFICKED AREAS AND 600mm IN LANDSCAPED/ PEDESTRIAN AREAS
SCALE 1:10

* INCREASE THESE DIMENSIONS IN ROCK OR MIXED SOILS CONTAINING ROCK BANDS, BOULDERS, LARGE FLINTS, STONES OR OTHER IRREGULAR HARD SPOTS

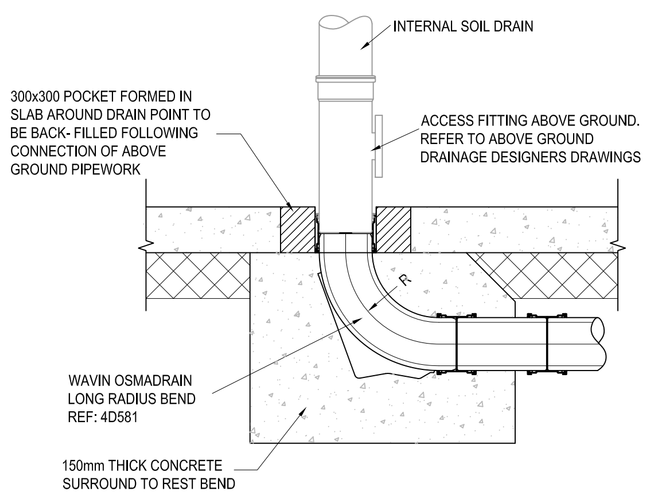

TYPICAL SOIL PIPE BASE DETAIL

SCALE 1:10

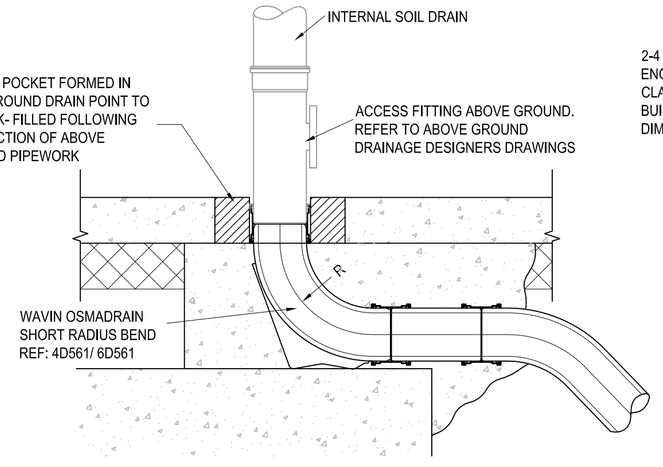

TYPICAL SOIL PIPE BASE DETAIL (ABOVE FOUNDATION)

SCALE 1:10

INTERNAL PIPE DIA	MAX TRENCH WIDTH 300mm ABOVE CROWN
150	600
225	700
300	850
450	1140
600	1370

PIPE SURROUND NOTES

1. THE BEDDING DETAILS SHOULD BE CROSSED REFERENCED TO PIPE MANUFACTURERS DETAILS AND INSTALLATION ADVISE.
2. THE GRANULAR SURROUND MATERIAL SHALL COMPLY WITH BS EN 1610 CONSTRUCTION AND TESTING OF DRAINS AND SEWERS ANNEX B TABLE B.15 AND SHALL ALSO COMPLY WITH THE COMPACTION TEST AS DESCRIBED IN THE SPECIFICATION.
3. THE SELECTED BACKFILL SHALL BE UNIFORM READILY COMPACTED MATERIAL FREE FROM TREE ROOTS, VEGETABLE MATTER, BUILDING RUBBISH & FROZEN SOIL. CLAY LUMPS OR SIMILAR MATERIAL OF 75mm DIA OR LARGER SHALL BE REMOVED & STONES OF 25mm DIA OR LARGER SHALL BE REMOVED.
4. MINIMUM COVER DIMENSIONS TO PIPE/PIPE SOCKET.

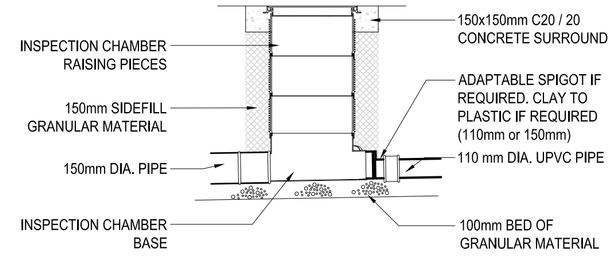

POLYPROPYLENE INSPECTION CHAMBER (PPIC)

SCALE 1:25

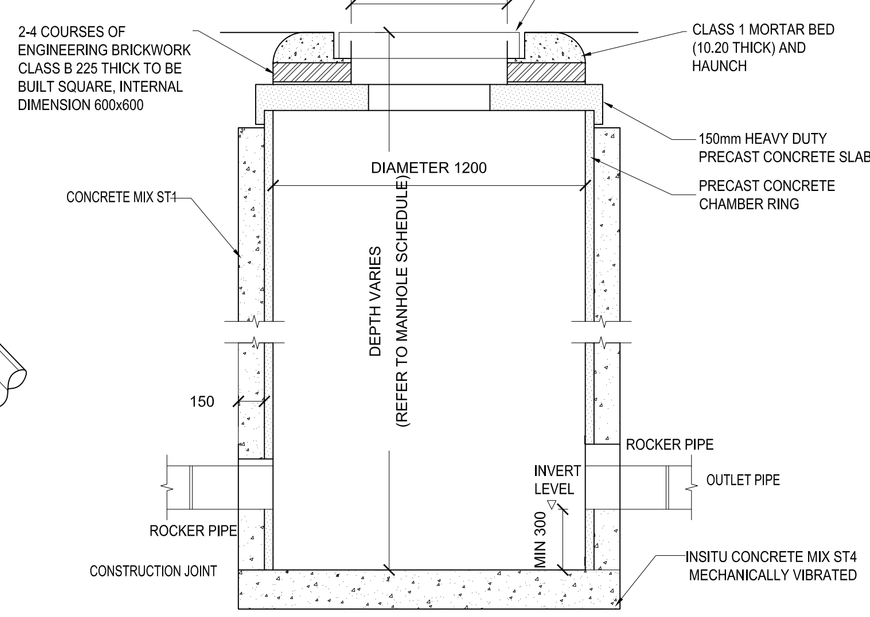

CATCHPIT PRIOR TO ATTENUATION TANK (CP)

SCALE 1:25

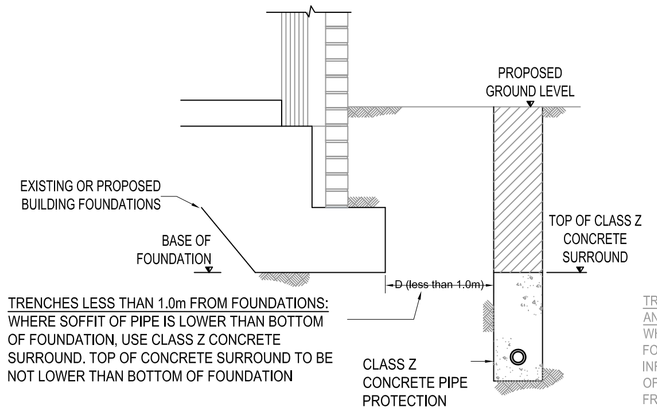

TRENCHES LESS THAN 1.0m FROM FOUNDATIONS:
WHERE SOFFIT OF PIPE IS LOWER THAN BOTTOM OF FOUNDATION, USE CLASS Z CONCRETE SURROUND, TOP OF CONCRETE SURROUND TO BE NOT LOWER THAN BOTTOM OF FOUNDATION

DRAINAGE TRENCH LESS THAN 1.0m FROM EXISTING/PROPOSED FOUNDATIONS

SCALE 1:20

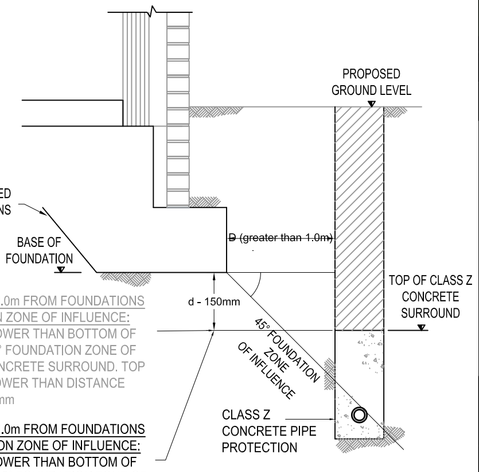

TRENCHES GREATER THAN 1.0m FROM FOUNDATIONS AND WITHIN 45° FOUNDATION ZONE OF INFLUENCE:
WHERE SOFFIT OF PIPE IS LOWER THAN BOTTOM OF FOUNDATION AND WITHIN 45° FOUNDATION ZONE OF INFLUENCE USE CLASS Z CONCRETE SURROUND. TOP OF CONCRETE TO BE NOT LOWER THAN DISTANCE FROM FOUNDATION (D) - 150mm

TRENCHES GREATER THAN 1.0m FROM FOUNDATIONS AND OUTSIDE 45° FOUNDATION ZONE OF INFLUENCE:
WHERE SOFFIT OF PIPE IS LOWER THAN BOTTOM OF FOUNDATION AND OUTSIDE 45° FOUNDATION ZONE OF INFLUENCE USE CLASS S PIPE BEDDING AND SURROUND

DRAINAGE TRENCH GREATER THAN 1.0m FROM EXISTING/PROPOSED FOUNDATIONS

SCALE 1:20

REVISION / DESCRIPTION	DRAWN	CHECKED	DATE
P03 - STAGE 4 ISSUE	CS	DN	05/06/17
P02 - STAGE 3 ISSUE	CS	DN	07/04/17
P01 - ISSUED FOR ITT	CS	JP	17/11/16
FIRST ISSUE			

KEY PLAN

CLIENT

MANCHESTER 1824
The University of Manchester

BDP.

11 Ducie Street
P.O. Box 85, Piccadilly Basin
Manchester M60 3JA
United Kingdom
T +44 (0)161 828 2200
F +44 (0)161 828 2235
www.bdp.com

PROJECT TITLE: Owens Park, Fallowfield Campus Redevelopment

PROJECT NUMBER: P2006665

DRAWING TITLE: Drainage Details Sheet 1 of 2

SCALE: @ A1 As Shown

DATE: Nov '16

DRAWING NO.: P00_00_(52)_Z0_C_300

REVISION: P03