STAKA

# **Fixed ladders** - Caged ladder

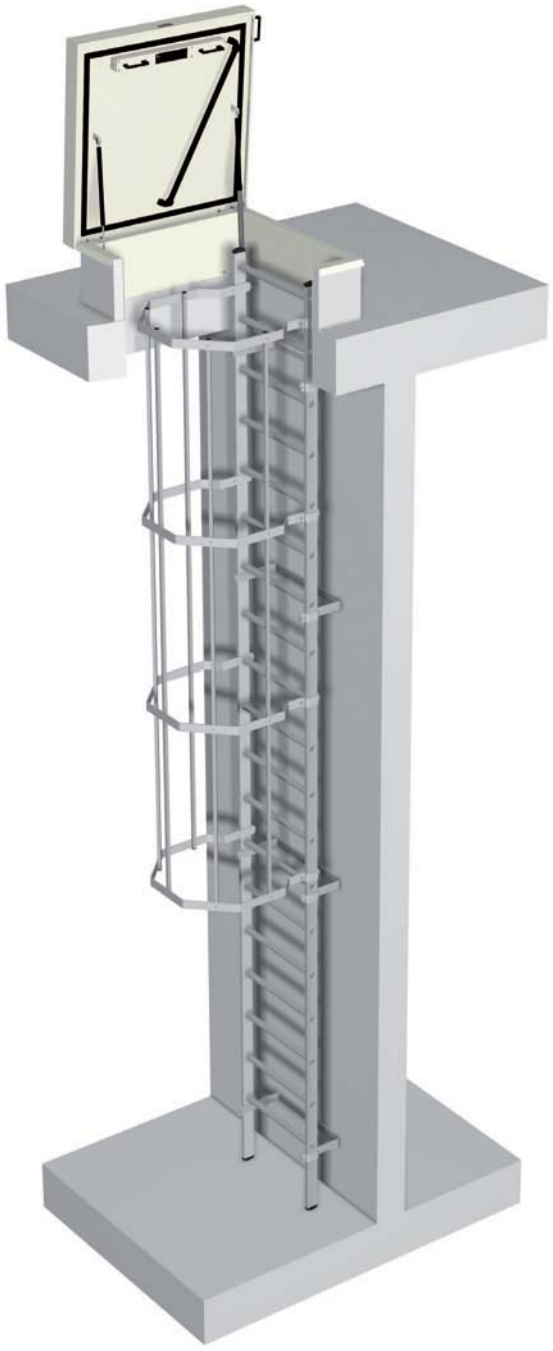

**Specifications**
High-quality aluminium.
Safe and user-friendly.
Available with telescopic railings to assist user when exiting.
Quality: EN 14122-4
Stiles: ± 69 x 25 mm
Rungs: ± 30 x 33 mm
Ladder width: ± 650 mm
To be mounted to the wall with wall brackets (included).
Cage obligated when height is three metres or greater.

# Fixed ladders - Façade ladders



**Specifications**
High-quality aluminium.
Safe and user-friendly.
Available with telescopic railings to assist user when exiting.
Quality: EN 14122-4
Stiles: ± 69 x 25 mm
Rungs: ± 30 x 33 mm
Ladder width: ± 650 mm
To be mounted to the wall with wall brackets (included).
Cage obligated when height is three metres or greater.

**With DL99 and DL 97**

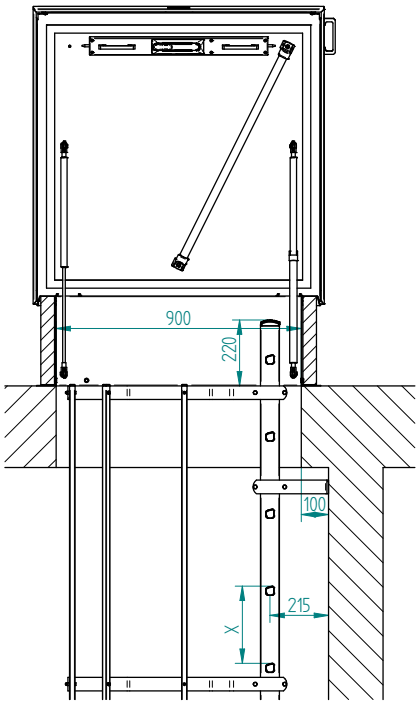


**With DL99 and DL 97**

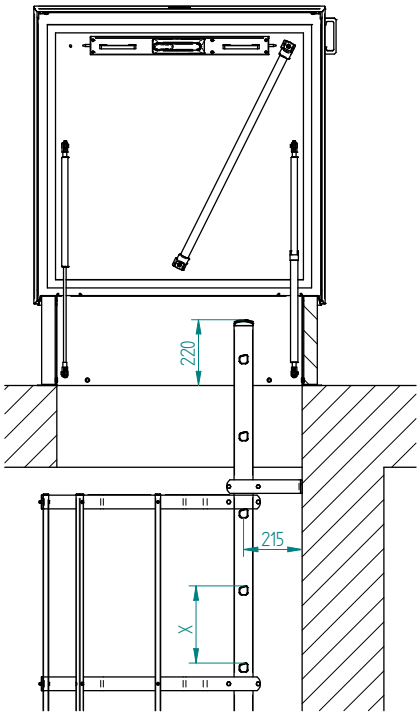


**When clear width ≥ 1.000 mm**

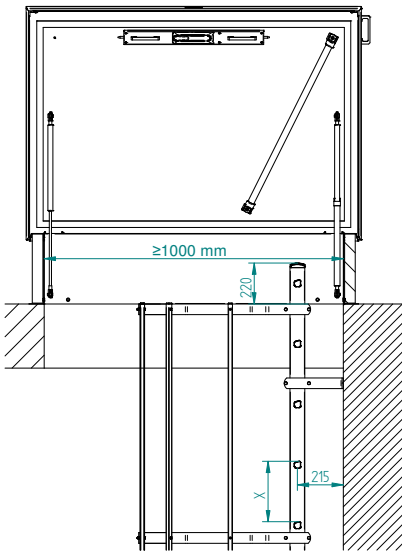


**Wall brackets**

