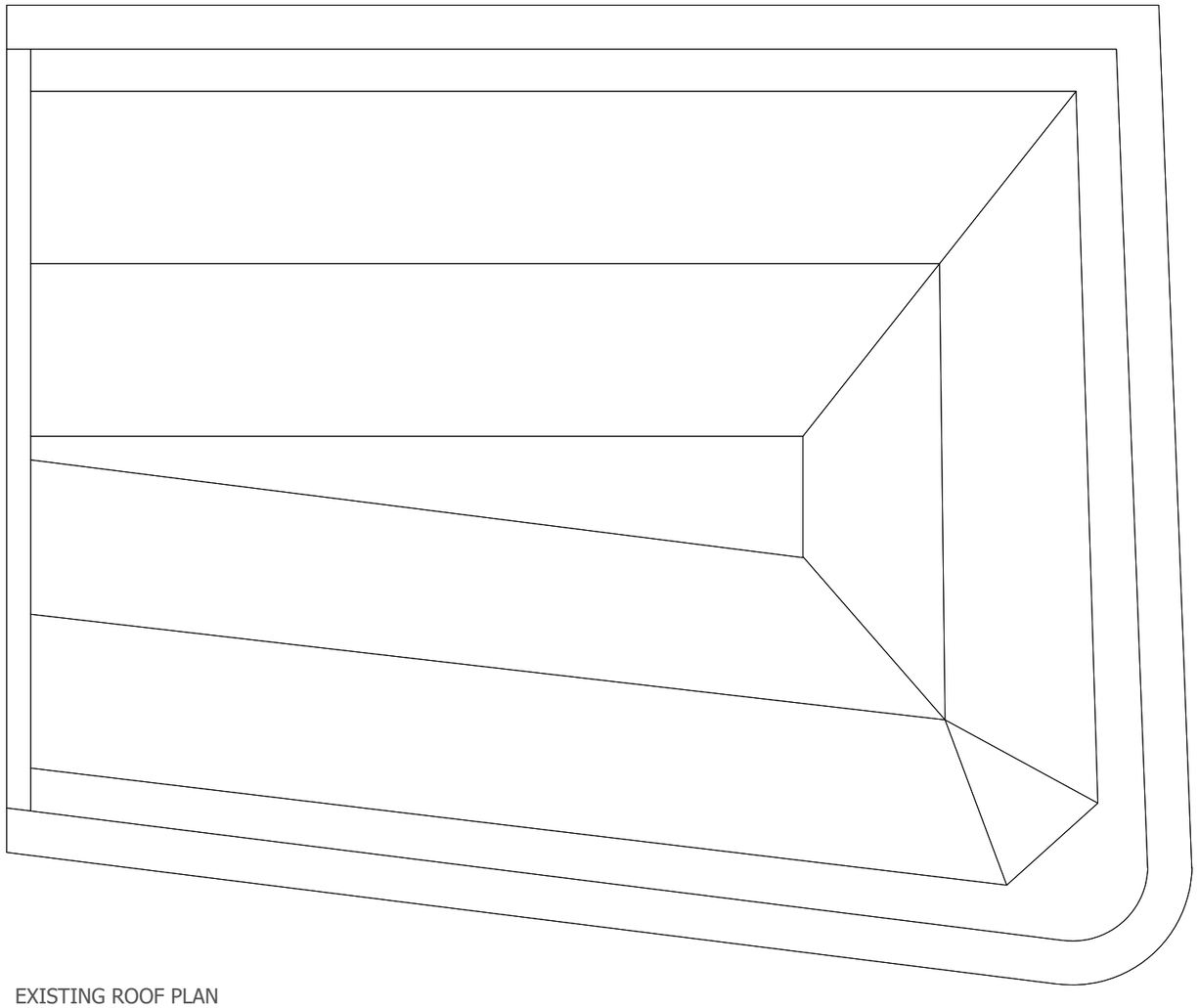

EXISTING ROOF PLAN

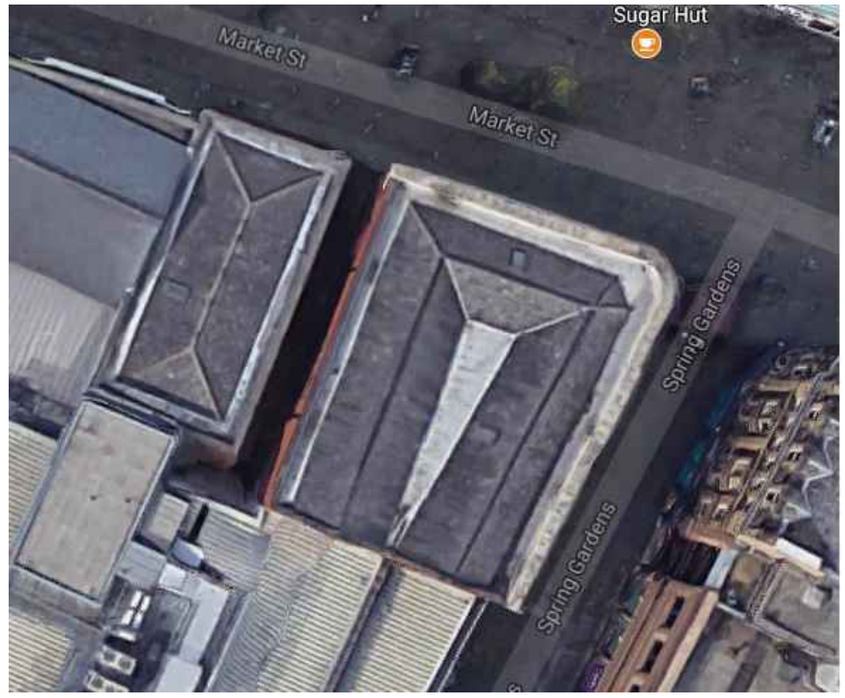

ARIEL VIEW OF ROOF

four architecture
cardiff . edinburgh . london . sheffield
Talbot Chambers
2-6 North Church Street
Sheffield, S1 2DH
0114 249 0944

© This drawing remains the Copyright of Four Architecture and Design. and may not be reproduced in whole or in any part without prior written permission.

NOTE:
All proprietory goods and materials are to be fitted in accordance with manufacturer's instructions, Codes of Practice and British Standards.
All dimensions to be verified by the Contractor on site.
Do not scale drawings, work to figured dimensions only.

CLIENT
Nationwide

Branch Investment Programme

REVISIONS

PROJECT
74-76 MARKET STREET
MANCHESTER M1 1PN

DRAWING
Existing Plans
Roof

SCALE @ A1	SCALE @ A3	DATE	PROJECT NUMBER	DRAWING NUMBER	REVISION
1:50	1:100	02-08-2017	26942	PL_EX_ROOF	-

DRAWN BY	CHECKED	STATUS
-	-	-