

PROPOSED WEST FACING FRONT ELEVATION

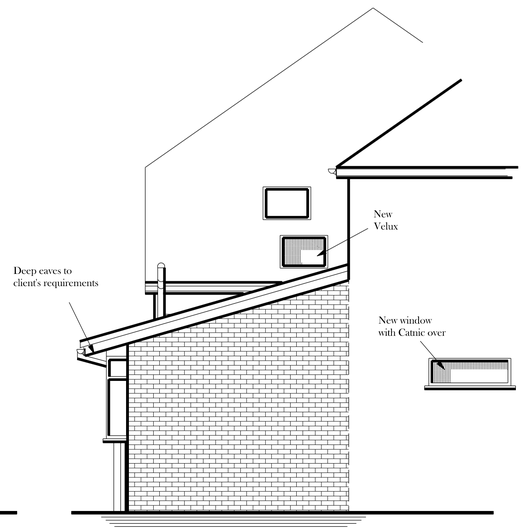

PROPOSED NORTH FACING SIDE ELEVATION



PROPOSED EAST FACING REAR ELEVATION

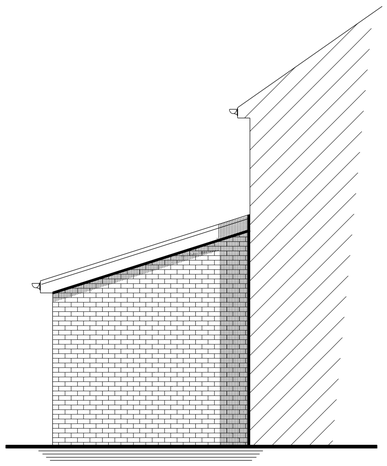

PROPOSED SOUTH FACING SIDE ELEVATION

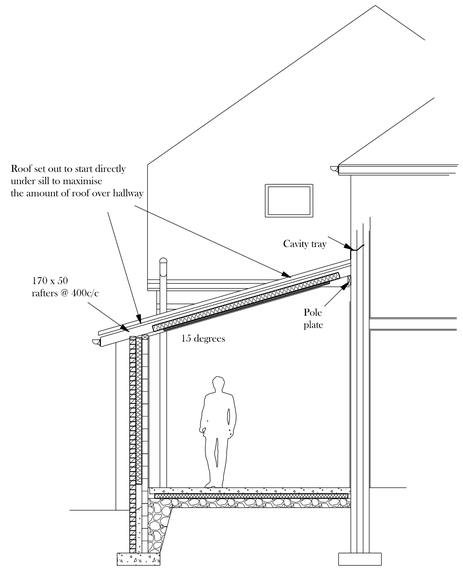

SECTION B - B

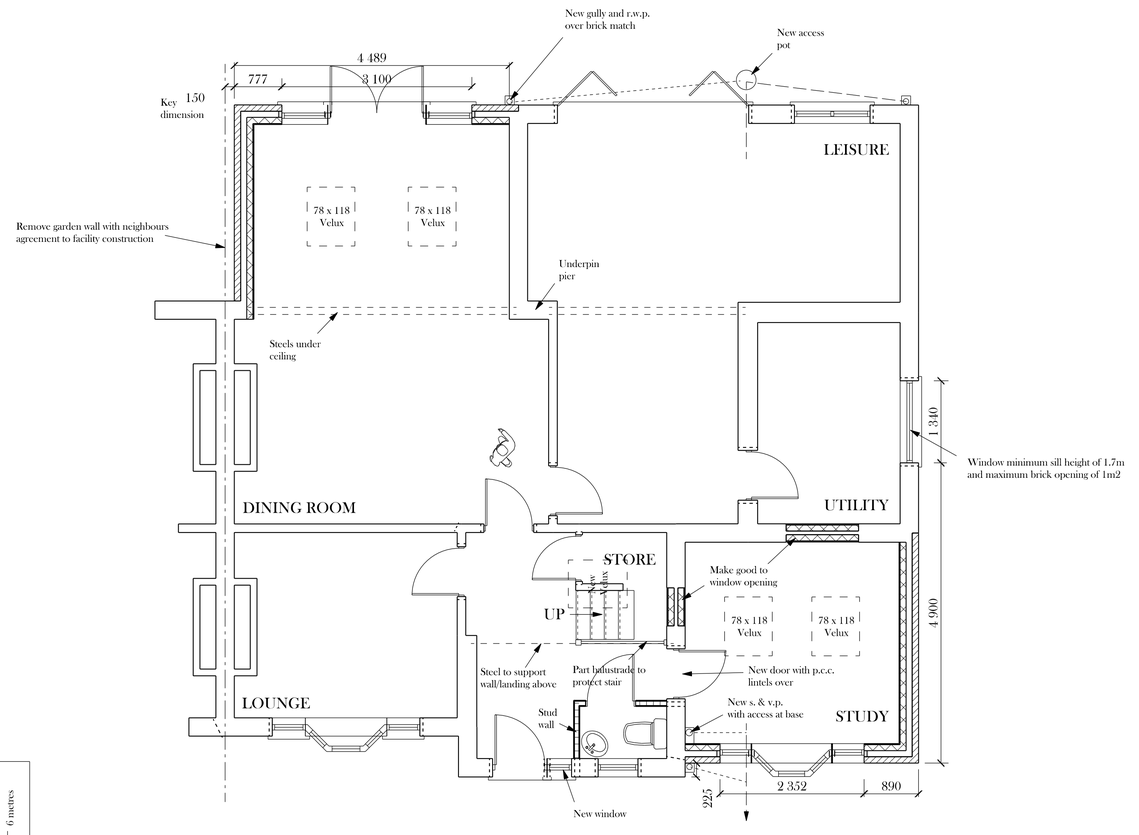

PROPOSED GROUND FLOOR PLAN

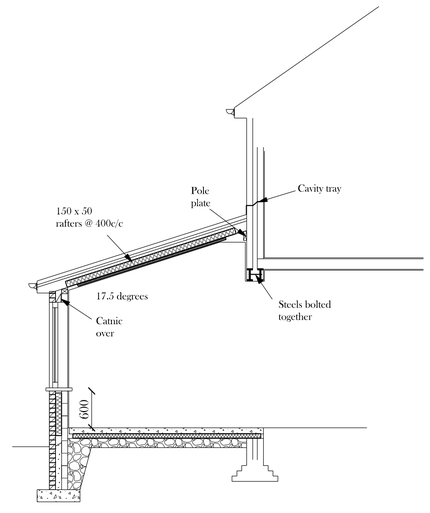

SECTION A - A

BRADLEY BUILDING DESIGN LTD.
34, OAK DRIVE,
BRAMHALL,
STOCKPORT,
CHESHIRE.
SK7 2AD.
0161 439 0087
Mob 07989 326039
bradleybuildingdesign@btopenworld.com

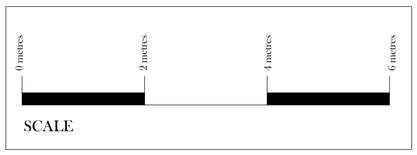

SCALE

PROPOSED DWELLING

SINGLE STOREY FRONT & REAR EXTENSION

for

Mr. and Mrs.D. BRADBURY-CHEETHAM,

at

59, PARRS WOOD AVENUE,

DIDSBURY,

M20 5NB.

Scale 1:50 @ A1

Date JUNE 2017

Drawing Number 1569/2/A