

PLANNING

EXTERNAL

MORGAN
Signs & Design

Unit A4, Walsall Enterprise Park,
Regal Drive, Walsall, WS2 9HQ

T: 01922 635 726 F: 01922 659 940
www.morgansignsanddesign.co.uk

Client: M & B

O'NEILL'S
Piccadilly Tavern 71-75 Piccadilly, Manchester
M1 2BS

Date REV 3 : 04.07.17

Sheet: 1 of 6

Drawn by: J.J

Decorating Schedule:

NB - Please refer to manufacturer paint swatches for true colour representation

FRONT ELEVATION - SCALE 1:100 @ A3

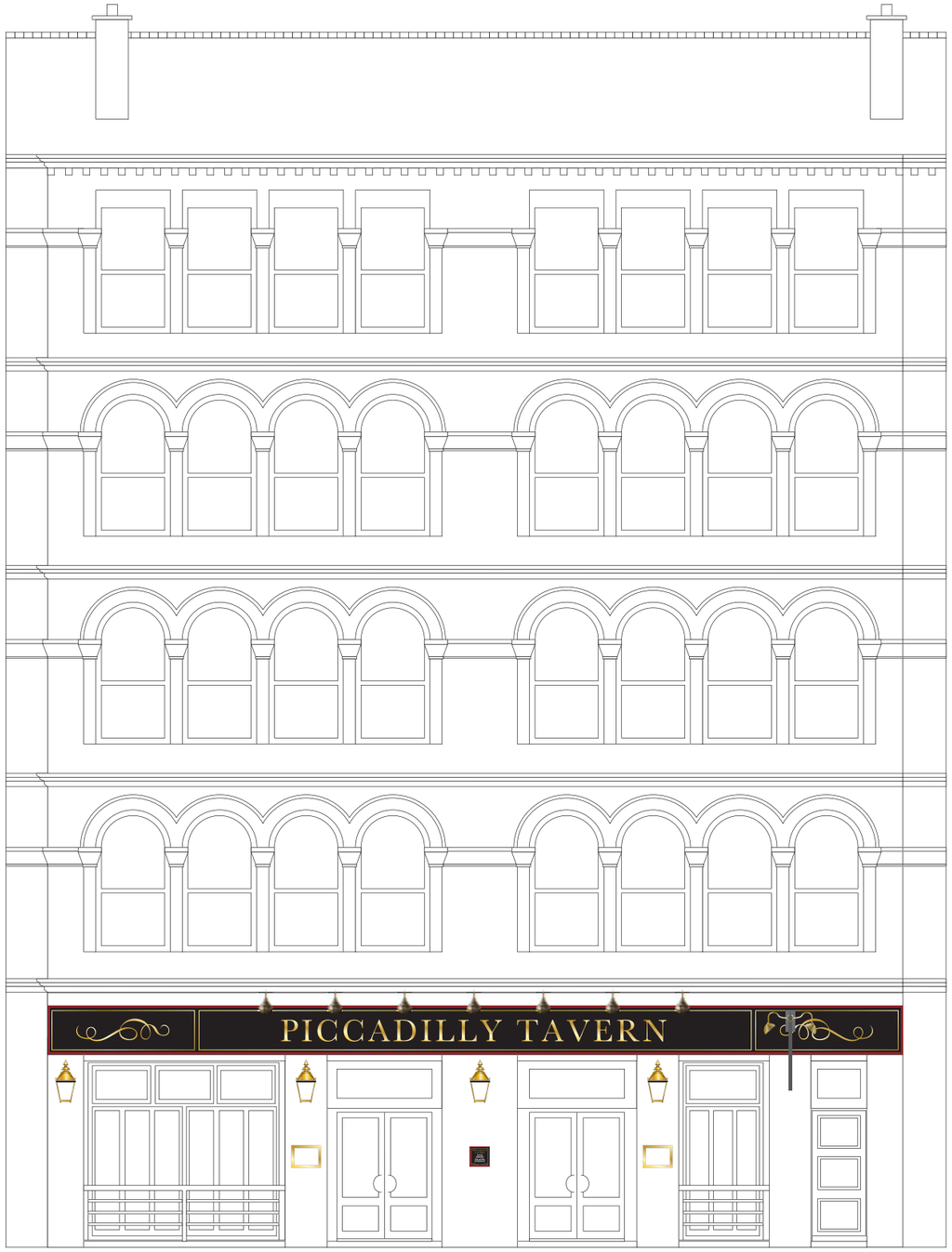

EXISTING SIGNAGE



PROPOSED SIGNAGE

MORGAN
Signs & Design

Unit A4, Walsall Enterprise Park,
Regal Drive, Walsall, WS2 9HQ

T: 01922 635 726 F: 01922 659 940
www.morgansignsanddesign.co.uk

Client: M & B

O'NEILL'S
Piccadilly Tavern 71-75 Piccadilly, Manchester M1 2BS

Date REV 3 : 04.07.17

Sheet: 2 of 6

Drawn by: J.J

Decorating Schedule:

NB - Please refer to manufacturer paint swatches for true colour representation



Item 1
Fasica: Digital print, Illuminated with x5 black cowl lamps
Size: 14870mm x 1162mm - (1 off)
and O'Neill's Built up letters coated white 100mm return edge.
Coated white rimless opal acrylic faces
internally illuminated by white LEDs mounted on
to a Aluminium panel with a digitally printed display.
Scale: 1:50@ A3

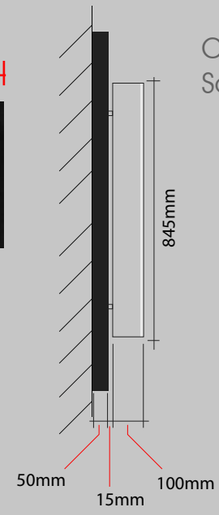

Cross- section
Scale: 1:20@ A3



Item 2. (4 off)
A3 Black lockable menu case
Scale: 1:10 @ A3

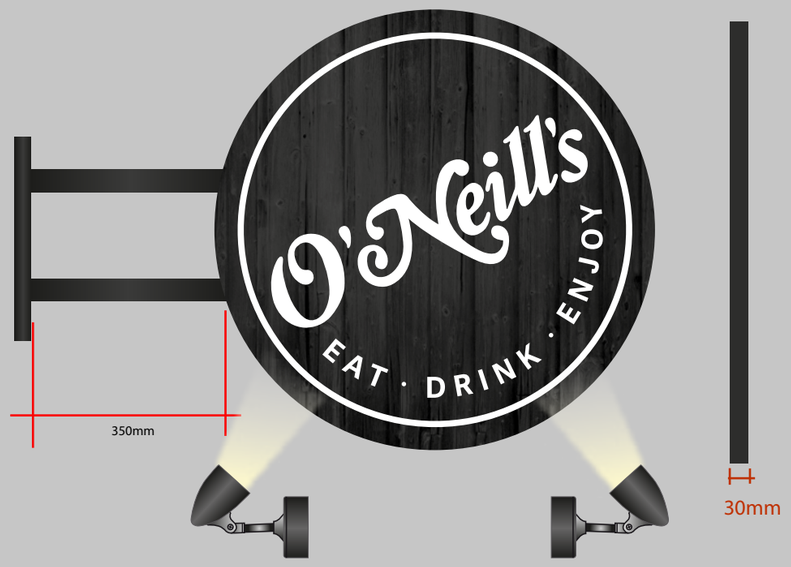

Front Elevation

Item 3. Projection Sign (1 off)
Double sided projection roundel coated
pewter carcass and black inset display
panels. Externally Illuminated
by 2x 200mm bullets with LED lamps
powdercoated black.
Size: 720mm x 720mm - (1 off)
Scale: 1:10 @ A3



Item 4. (2 off)
Luminaire Reference light
with bespoke bracket powdercoated black
Scale: 1:10 @ A3

PROPOSED SIGNAGE AND CROSS - SECTIONS

MORGAN Signs & Design
Unit A4, Walsall Enterprise Park, Regal Drive, Walsall, WS2 9HQ
T: 01922 635 726 F: 01922 659 940
www.morgansignsanddesign.co.uk

Client: M & B

O'NEILL'S
Piccadilly Tavern 71-75 Piccadilly, Manchester M1 2BS

Date REV 3 : 04.07.17

Sheet: 3 of 6

Drawn by: J.J

Decorating Schedule:

NB - Please refer to manufacturer paint swatches for true colour representation

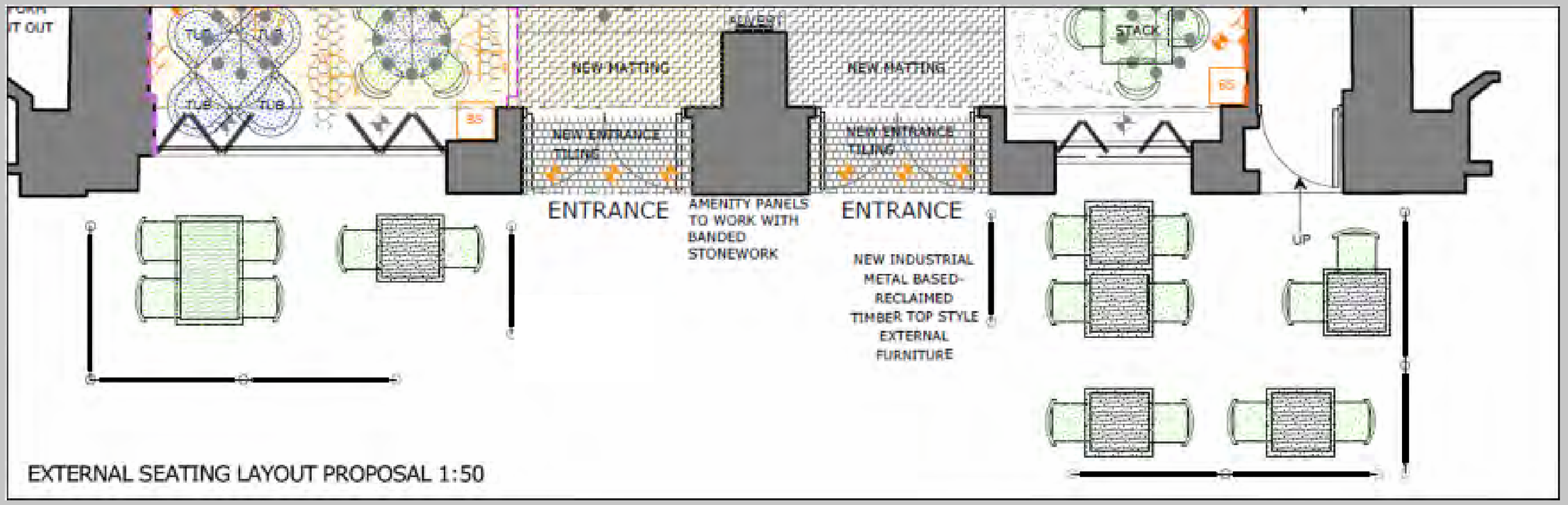



Item 5
QTY 9 off
Branded planter boxes with lockable castors and screens.

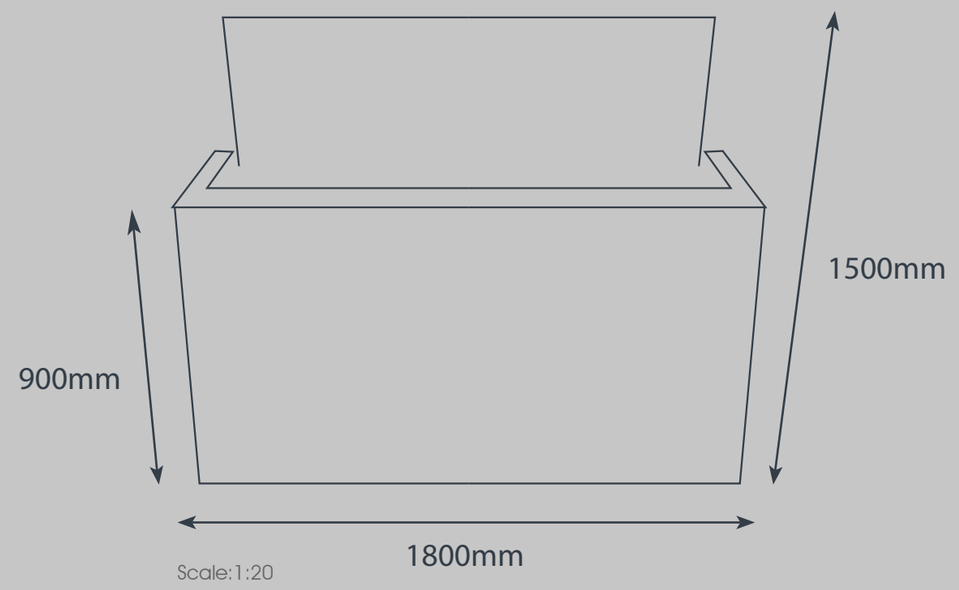

Scale:1:20

PROPOSED SIGNAGE AND CROSS - SECTIONS

MORGAN
Signs & Design

Unit A4, Walsall Enterprise Park, Regal Drive, Walsall, WS2 9HQ

T: 01922 635 726 F: 01922 659 940
www.morgansignsanddesign.co.uk

Client: M & B

O'NEILL'S
Piccadilly Tavern 71-75 Piccadilly, Manchester M1 2BS

Date REV 3 : 04.07.17

Sheet: 4 of 6

Drawn by: J.J

Decorating Schedule:

NB - Please refer to manufacturer paint swatches for true colour representation

Re-paint existing fascia sign, with a set of gold individual letters with applied scrollwork.
7No New Brass cowl lights.
Scale 1:40



Double sided pictorial sign, with cowl lighting.
Use existing gibbet and scrollwork.
Scale 1:20

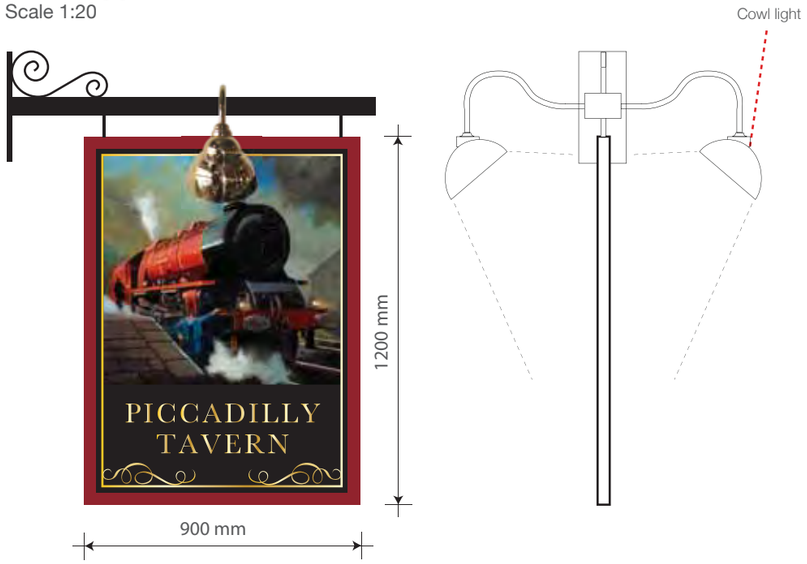

4No Brass Warwick lanterns.
Scale 1:20

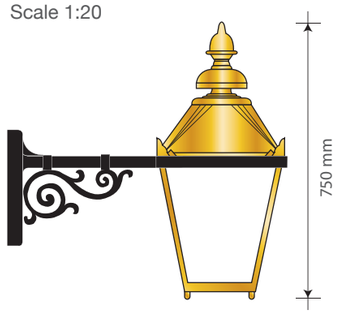

New food served times sign.
Scale 1:10



2No Brass A3 menu cases.
Scale 1:20

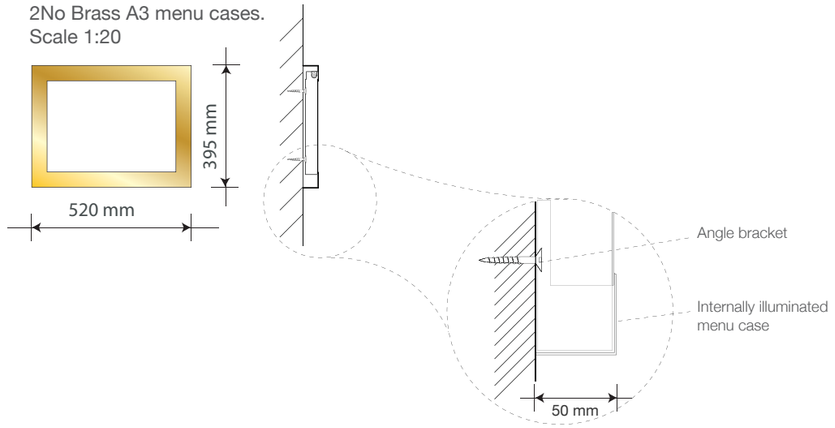

scale 1:20

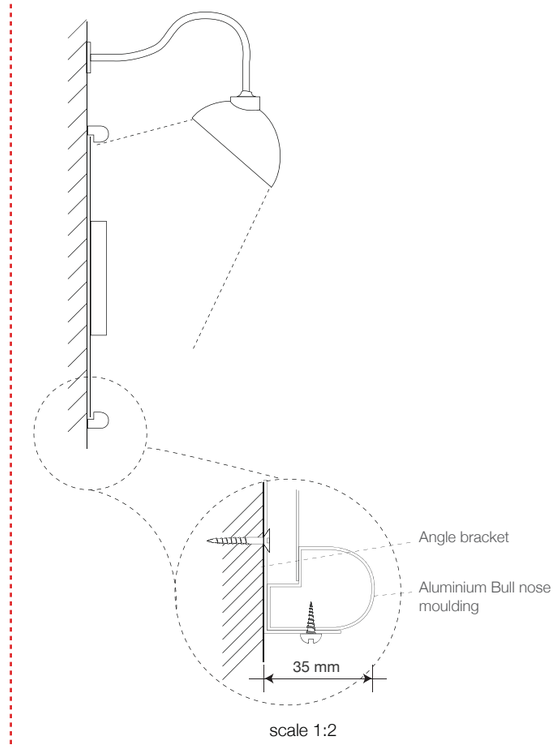

scale 1:2

EXISTING SIGNAGE AND CROSS - SECTIONS

MORGAN
Signs & Design

Unit A4, Walsall Enterprise Park,
Regal Drive, Walsall, WS2 9HQ

T: 01922 635 726 F: 01922 659 940
www.morgansignsanddesign.co.uk

Client: M & B

O'NEILL'S
Piccadilly Tavern 71-75 Piccadilly, Manchester
M1 2BS

Date REV 3 : 04.07.17

Sheet: 5 of 6

Drawn by: J.J

Decorating Schedule:

NB - Please refer to manufacturer paint swatches
for true colour representation





EXISTING

MORGAN
Signs & Design

Unit A4, Walsall Enterprise Park, Regal Drive, Walsall, WS2 9HQ

T: 01922 635 726 F: 01922 659 940
www.morgansignsanddesign.co.uk

Client: M & B

O'NEILL'S
Piccadilly Tavern 71-75 Piccadilly, Manchester M1 2BS

Date REV 3 : 04.07.17

Sheet: 6 of 6

Drawn by: J.J

Decorating Schedule:

NB - Please refer to manufacturer paint swatches for true colour representation