GRAF

Wastewater treatment system one2clean

innovative designed.

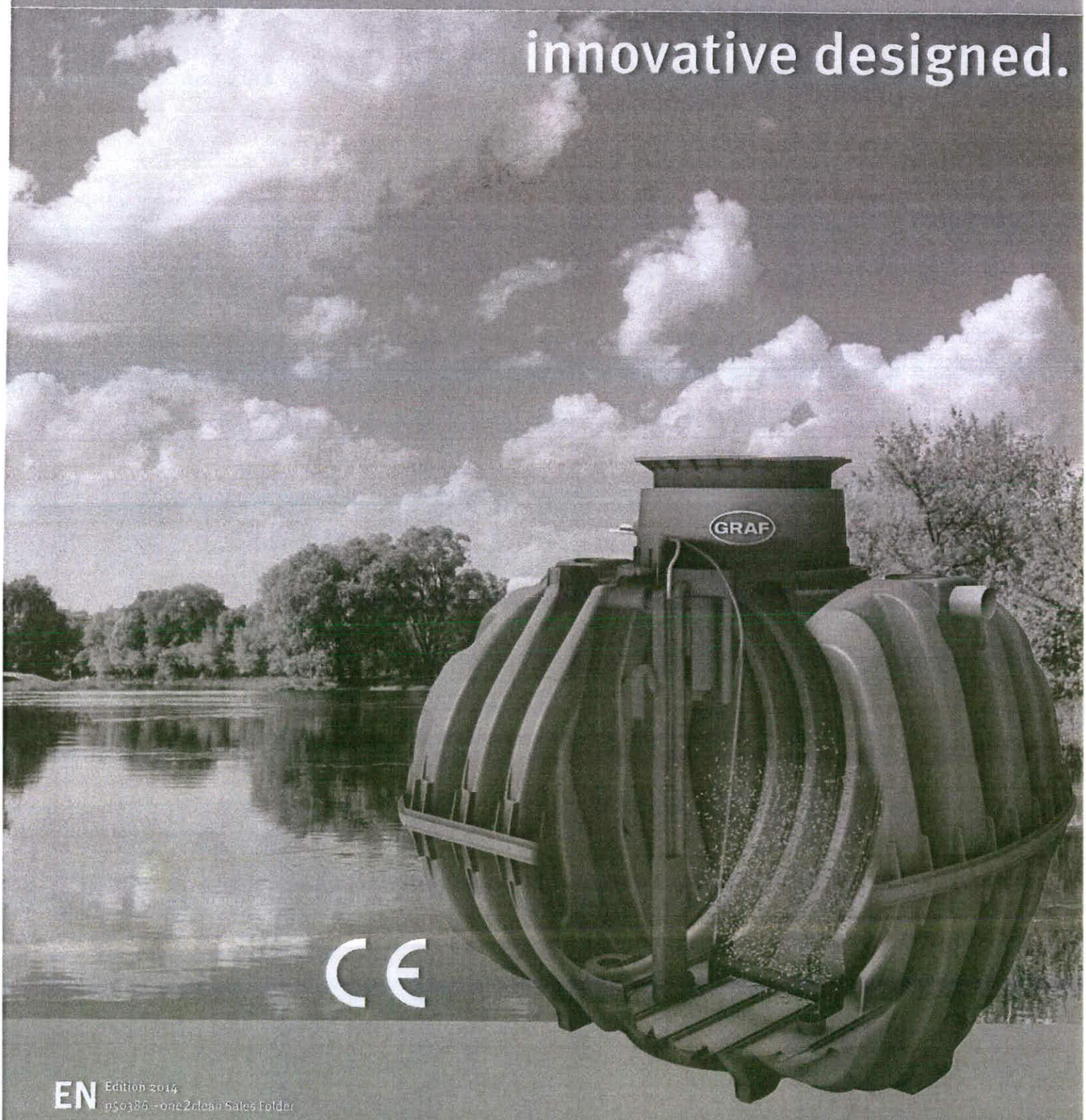

CE

EN Edition 2014
ps0386 – one2clean Sales Folder

GRAF®

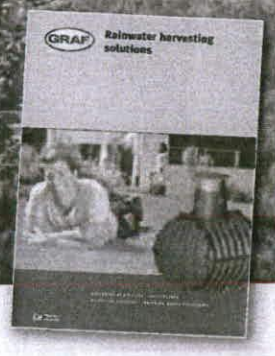

Rainwater harvesting solutions
For more information about our rainwater harvesting solutions, ask for our catalogue.

www.graf.info

RAINWATER HARVESTING



STORMWATER MANAGEMENT



WASTEWATER TREATMENT SOLUTIONS



MULTIPURPOSE CONTAINERS



Prices:
A price list with our export conditions is available on request.

Warranty clause:
The warranty mentioned in this brochure only refers to the tank in question and not to the accessories. Within the warranty period we grant free replacement of the material. Further benefits are excluded. Pre-condition for warranty benefits are proper handling, assembly and installation according to the mounting guidelines.

N.B. Protect tanks from frost when installed above-ground! In case of groundwater installation, please contact us for further information previous to the purchase!

For all indications of measurements in this brochure we reserve a tolerance of +/- 3 %. The useful volume of the tanks may be up to 10 % lower than the tank capacity, according to the connecting option.

Technical modifications and further development of the different products are subject to change. Errors excepted.

For all our offers and conclusions of contract are only valid our General Terms and Conditions of Business dated 01/10/2012 which we will send to you on request.

Otto Graf GmbH
Kunststofferzeugnisse
Carl-Zeiss-Straße 2-6
D-79331 Teningen, Germany

Phone: +49(0)76 41/5 89-0
Fax: +49(0)76 41/5 89-50
mail@graf.info
www.graf.info

© Otto Graf GmbH, Teningen, Germany
Reproduction – also in extracts – only with written authorisation
Art.-Nr. 950386/EN

technical data

one2clean – Limit values and flow parameters

Wastewater parameter	Benchmark parameters Germany	cleaning performance one2clean*	Efficiency factor
COD (chemical oxygen demand)	90 mg/l	43 mg/l	**94 %**
BOD_5 (biochemical oxygen demand)	20 mg/l	7 mg/l	**98 %**
NH_4-N (ammonium nitrogen)	10 mg/l	0,5 mg/l	**98 %**
Ntot (total nitrogen)	–	7,9 mg/l	**87 %**
FS (filterable substances)	–	14 mg/l	**96 %**

**Test report: PIA2013-181B14fka*

Two-reservoir system

One-reservoir system

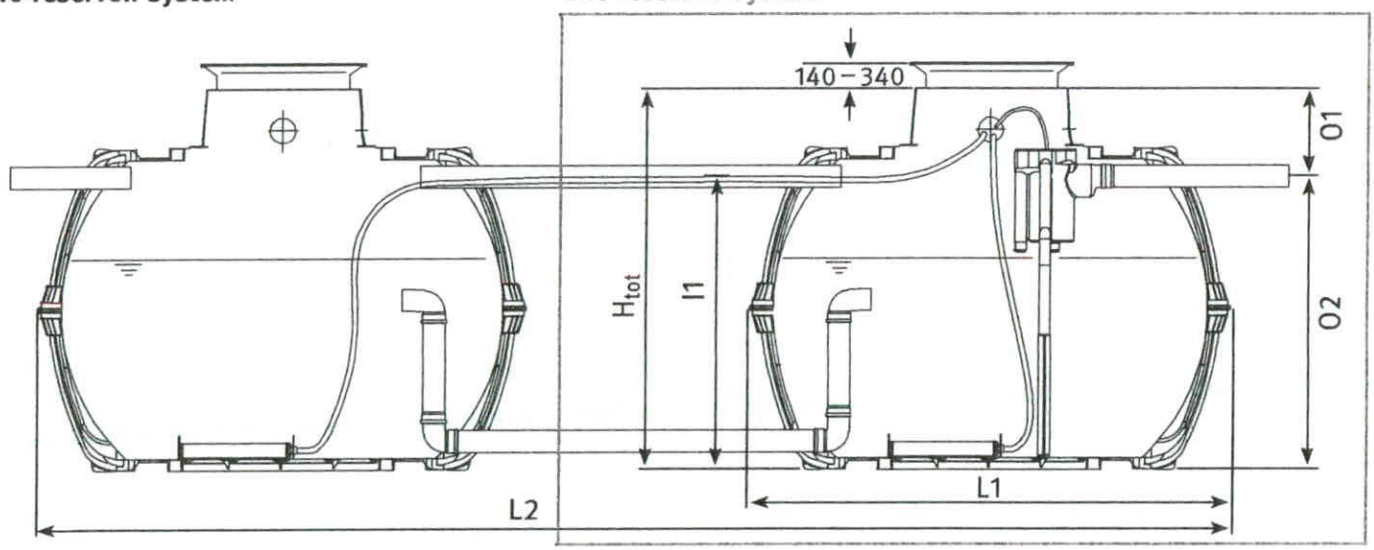

One-reservoir system

Inhabitants	Volume	max. daily flow	Length L1	Height H_{tot}	Inlet I1	Outlet O1	Outlet O2
1 – 3	2.700 litres (700 US gallons)	450 litres (118 US gallons)	2080 mm (81.9")	1690 mm (66.5")	1490 mm (58.6")	470 mm (18.5")	1210 mm (47.6")
4 – 5	3.750 litres (1.000 US gallons)	750 litres (197 US gallons)	2280 mm (89.8")	1880 mm (74.0")	1680 mm (66.1")	470 mm (18.5")	1400 mm (55.1")
6 – 7	4.800 litres (1.250 US gallons)	1.050 litres (277 US gallons)	2280 mm (89.8")	2110 mm (83.0")	1910 mm (75.1")	470 mm (18.5")	1630 mm (64.1")
8 – 9	6.500 litres (1.700 US gallons)	1.350 litres (356 US gallons)	2390 mm (94.1")	2390 mm (94.1")	2190 mm (86.2")	470 mm (18.5")	1910 mm (75.1")

Two-reservoir system

Inhabitants	Volume	max. daily flow	Length L2	Height H_{tot}	Inlet I1	Outlet O1	Outlet O2
1 – 7	2 x 2.700 litres (2 x 700 US gallons)	1.050 litres (277 US gallons)	4660 mm (184")	1690 mm (66.5")	1490 mm (58.6")	470 mm (18.5")	1210 mm (47.6")
8 – 10	2 x 3.750 litres (2 x 1.000 US gallons)	1.500 litres (395 US gallons)	5060 mm (199")	1880 mm (74.0")	1680 mm (66.1")	470 mm (18.5")	1400 mm (55.1")
11 – 14	2 x 4.800 litres (2 x 1.250 US gallons)	2.100 litres (554 US gallons)	5060 mm (199")	2110 mm (83.0")	1910 mm (75.1")	470 mm (18.5")	1630 mm (64.1")
15 – 18	2 x 6.500 litres (2 x 1.700 US gallons)	2.700 litres (712 US gallons)	5280 mm (208")	2390 mm (94.1")	2190 mm (86.2")	470 mm (18.5")	1910 mm (75.1")

one2clean offers maximum safety and reliability

Low space requirements
- Just 4 m² (5 Inhabitants)
- Less installation costs

Long warranty and lifetime
- 15-year warranty on sewage reservoirs, 3 years warranty on technology
- High-quality components
- Simple technology

Twice the buffer volume
- Dispensing with separating the reservoir into different chambers
- Therefore enough capacity for overload

Logistical advantages

The Carat S tank consists of two half shells which can be stacked on top of each other, allowing multiple tanks to be stacked on a single pallet for shipping.

The tanks unique stacking feature directly reduces transport costs and environmental impact from vehicle emissions, whilst allowing shipments to any destination in the world.



Logistical advantages

GRAF TV
www.graf-water.com

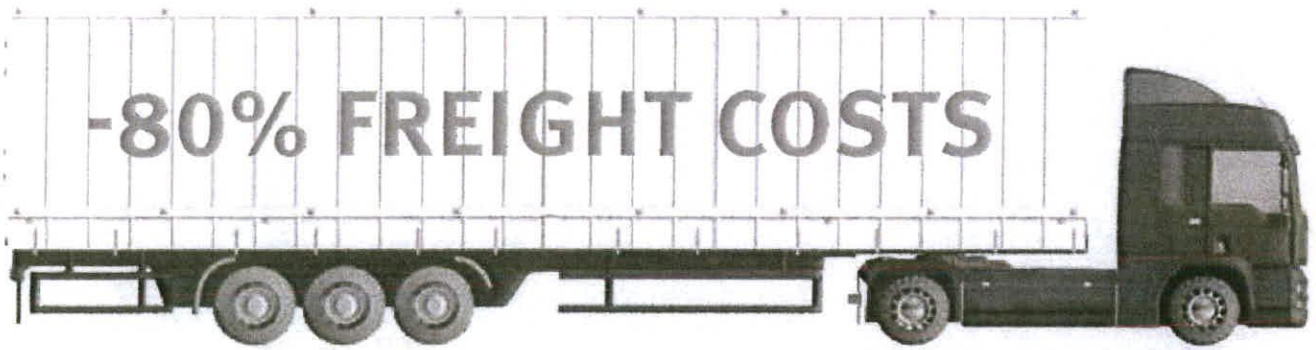

Carat S septic tank

The Carat S septic tank is just as revolutionary as what goes on inside: Its injection compression moulding manufacturing process is a global first for tanks of this size. With its unique precision fit, all components and connecting cables can be mounted easily and accurately.

Patented quick connection and EPDM sealing allows the Carat S tank to be assembled without screws

Easy fitting telescopic and tilting tank cover allowing flush fitting to surrounding ground surface

Rotating tank dome facilitates connection

Only one cover required

Suitable for vehicle loading [1]

100% waterproof and corrosion-resistant

Can be mounted in groundwater



[1] When used with cast iron tank cover

one2clean is excellent value for money

Incredibly little sewage sludge
Aeration of the entire wastewater tank
- Immediate wastewater activation
- Minimisation of the sludge
- Less sludge removal
- Cost savings

Minimum maintenance costs
- Simple construction
- High-quality components
- As much technology as necessary, as little technology as possible.
- Integrated sampling point

Minumum power consumption
- one2clean has only one pumping process, reducing energy consumption and running costs
- Economical motor valve
- Energy optimised membrane compressor

Conventional wastewater treatment systems

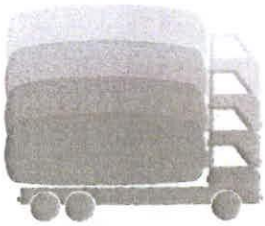

one2clean





Only 75 kWh per person and per year!

one2clean system control

The one2clean has a compact designed controller.

The microprocessor control system ensures simple operation and maintenance.

Ultra quiet thanks to silent diaphragm compressor.

Automatic power failure detection.

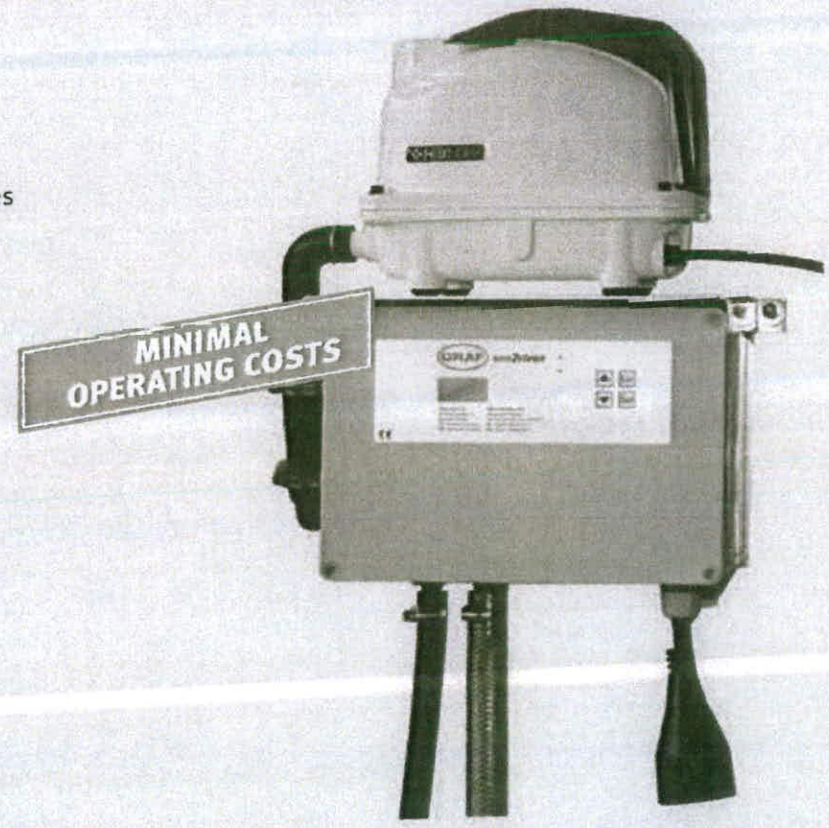

3 years warranty

one*2clean* is a clean solution

one*2clean* only needs 3 steps to produce clear water
The wastewater treatment is carried out in one chamber in just one tank. This eliminates unnecessary pumping processes and sludge return.

one*2clean* is odourless
The entire waste water is immediately activated with oxygen using the unique one2clean technology. The final process of the one2clean produces an odourless, clear treated water for extraction to soakaway or waterway" *

one*2clean* already meets the needs of tomorrow
The one2clean wastewater treatment system can achieve sustainable discharge values with an efficiency factor of up to 99%! This offers high investment security – even if legal requirements become stricter.

* Manufacturers operating and installation instructions must be adhered to.

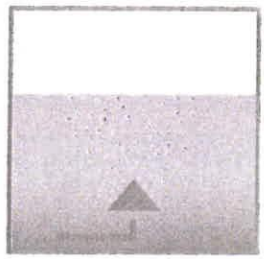

1. Wastewater treatment
The waste water arrives directly in the biological zone without the need for pumping processes. Aeration of the entire container leads to immediate waste water activation. The microorganisms begin the biological cleaning process without delay.



2. Settling phase
Aeration is interrupted by the control unit, the activated sludge sinks to the bottom. A clear water zone develops in the upper part of the container.

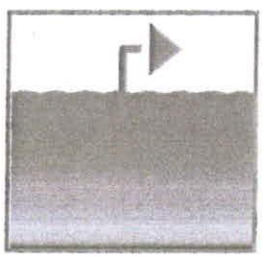

3. Clear water extraction
The treated clear water is extracted from the system and the cleaning process can begin once more.

one*2clean* setting-up kit

Conventional wastewater treatment systems require up to three pumping processes. one2clean only requires one pumping process, this saves energy and extends the lifetime of the air compressor – the core part of the system.

Rugged clear water lifter manufactured in one seamless piece. No connectors or screws necessary.

Simple maintenance via an integrated, self-cleaning sampling container.

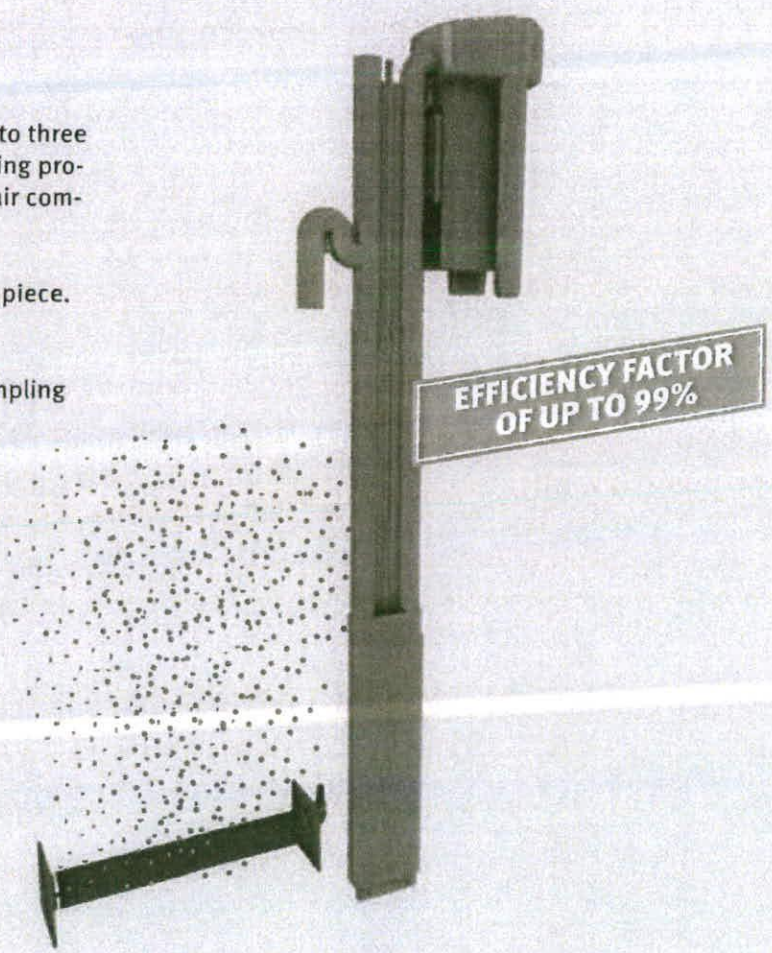

3 years warranty

one2clean is smart and simple!

one2clean is an advanced development of the proven SBR wastewater treatment technology, with considerable advantages in terms of operating costs and safety. By purchasing the one2clean wastewater treatment system, you are choosing GRAF quality and benefit from the experience of more than 250,000 satisfied customers.

With one2clean, wastewater disposal is safe and affordable



As much technology as necessary, as little technology as possible.

Over the past few years, wastewater treatment systems have experienced impressive technological developments. Today, they are high-tech products equipped with sophisticated controls and various pumps, sensors and valves. Yet this is often to the detriment of the product's reliability. A reliable wastewater disposal system no longer needs to be complicated. With one2clean, you will be able to take responsibility for the timely disposal of your waste water, while taking care of your budget and the environment.

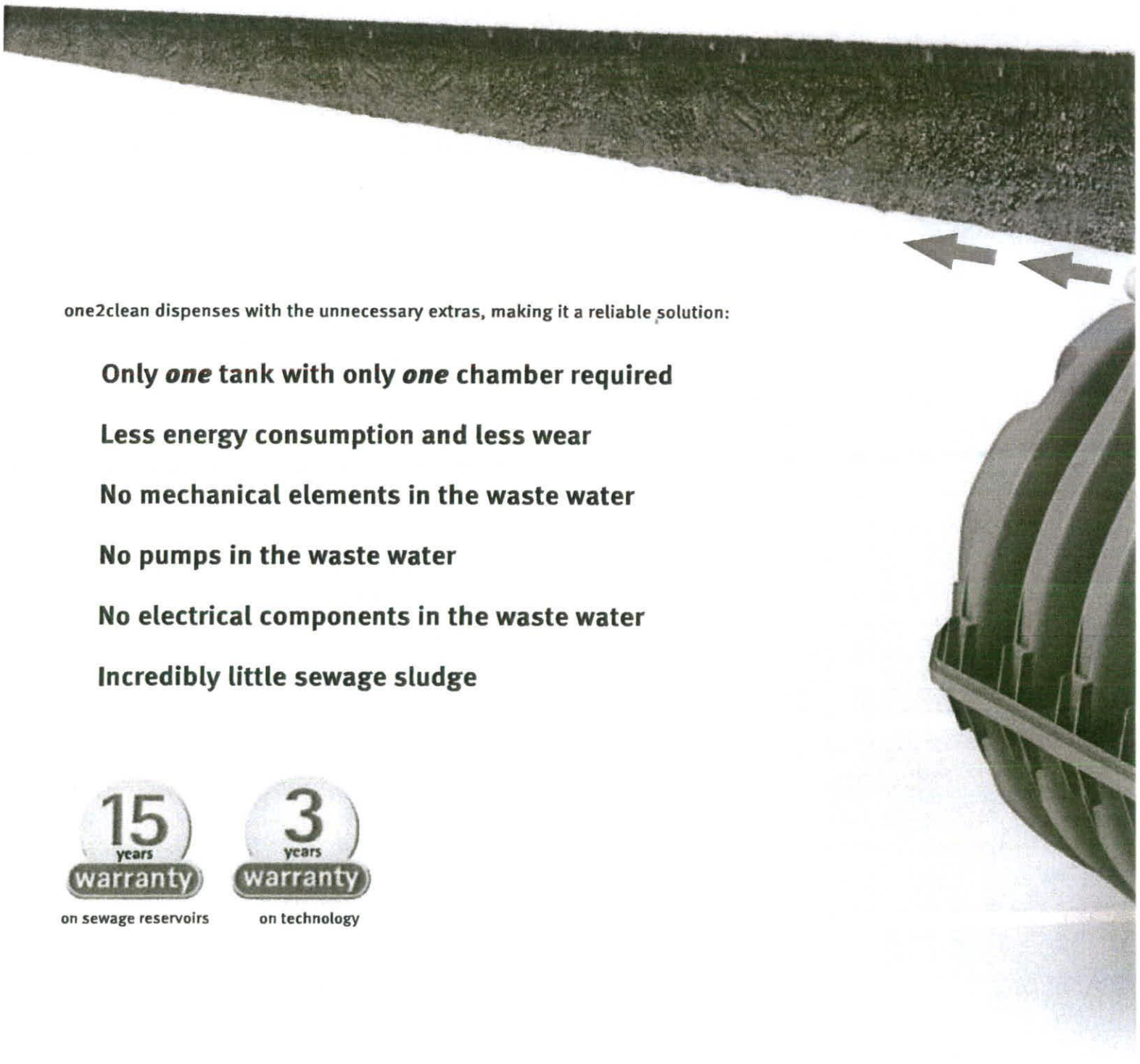

one2clean dispenses with the unnecessary extras, making it a reliable solution:

Only *one* tank with only *one* chamber required

Less energy consumption and less wear

No mechanical elements in the waste water

No pumps in the waste water

No electrical components in the waste water

Incredibly little sewage sludge

15 years warranty
on sewage reservoirs

3 years warranty
on technology

Why Drains Block
Internal Venting
Wh[redacted]Drain Is It ?
Drain Surveys
No-Dig Repairs
Drain Location
Drain Rods Stuck
Find A Contractor

Drain Pipe Work
Clay Drain Pipes
Plastic Pipe Work
Pitch Fibre Pipes
Cast Iron Pipes
Concrete Pipes

Drainage Parts
Drain Gullies
Dropshafts
Interceptor Traps
Soil Vent Pipes
Anti-Flood Valves
Manholes

Drain Repairs
Excavations
Drain Lining
Patch Lining
Pipe Bursting
Re-Rounding

Drainage Investigations
Drain Surveys
Sonar Tracing

Please Support

Advertise on Drain Domain .Com

Pipe Bedding Specifications

The following is a brief introduction on the subject of pipe bedding and should not be viewed as a definitive guide. Pipe bedding guidelines are dealt with in Part H of the Building Regulations in which several site specific situations are addressed, you should consult the above document and your local building control officer if undertaking any new installation works.

Many of the defects found on the earlier drainage systems are the result of way the pipe work was installed, that is not to say that the guys who installed these systems were at fault as we are repairing drain runs that have lasted 100 years and more but there was little if any specification for the laying of the pipes.

The trade books and catalogues of the time give details for laying clay pipes on haunched concrete and on occasions a granular fill, however we tend to find that the infill around the pipe work is the finer sub-soil from the original excavation works. We now of course have strict guidelines for pipe bedding on new installations which are carried over into the excavation and repair procedures

Plastic Drainage Pipe Work

Plastic pipe work relies on the granular fill around it for structural support without it the pipe work will become deformed when under load, if the deformation is greater than 5% of the pipe diameter then the system has failed and would require renewal.

Pipe profiling equipment is used to scan a ring of light onto the internal wall of a plastic drain and software is then used to measure any deformation of the pipe. Increasingly called for as newer materials take the place of the traditional clay and concrete pipes that showed obvious defects such as cracking and fractures when under pressure, the powers that be now set a tolerance for deformation of new sewer systems made of modern materials and this is the tool of choice for checking the systems prior to hand over.

Pipe Bedding For Flexible Drainage Systems (Plastic)

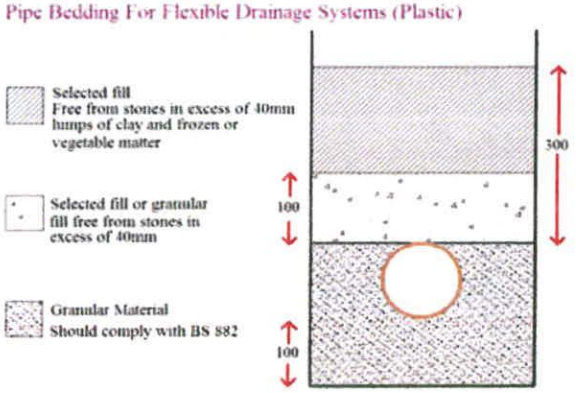

Clay Drainage Pipe Work

Clay pipes are prone to impact damage from such things as large stones or a half brick coming into contact with the pipe during the back fill process, settlement to the sub-soil beneath the pipe can lead to stress fractures and collapse it is therefore necessary to ensure that the pipe work is bedded an an appropriate granular material.

Gone are the days when rolling a wooden ball through a new system was a test of its integrity, pressure tests and drain camera inspection will always highlight any defects on a poorly bedded system.

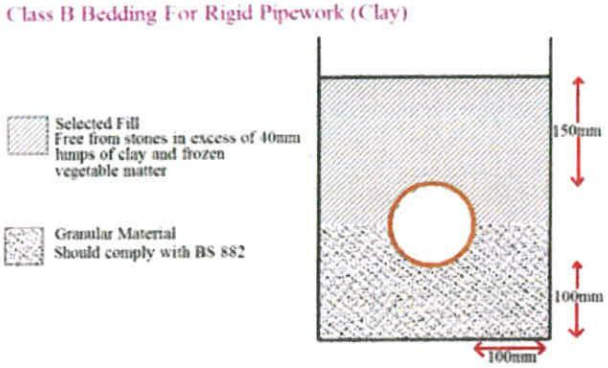

The two images above show the selected granular bedding supporting the underneath and side of the pipe work, in practice on most domestic repairs we tend to surround the pipe with the bedding material, unless you are working in pure sand the time required to sort the excavated materials to ensure there are no sharp edges, large stones or lumps of clay coming into contact with the pipe is wasted for the sake of another barrow full of stone.

If however you are installing a hundred metres of new pipe work the cost of importing the additional granular bedding and then removing the excess spoil from site may well make it worth your while to use the selected back fill as shown above.

There is a school of thought that by installing a granular fill around the pipe work you are in fact creating a water course around the service, which in itself could lead to soil erosion around the pipe work and that a compacted grit sand would be a preferable material to use. In fact when working in pure sand particularly beneath the highways and roads it does go against the grain to be removing all the spoil from site and import tonnes of M.O.T and granular fill to back fill the trench.

Bedding Materials Sizing

Nominal Bore Of Pipe (mm)	Size mm Single Sized	Size (mm) Graded
100 - 125	10	-
150 -200	10 or 14	14 to 5

Granular fill to be in compliance with BS 882

The type of granular bedding used will dependant on your location, typically a single sized pea gravel would be used, however there is a definite push towards a more environmentally friendly form of bedding materials such as recycled glass and slate aggregates that are the bye-product of other industries.

Geo-Textiles

Geo-textiles are used to line the trench prior to the pipe bedding being installed, these products are used to prevent soil erosion and can be utilised as a root barrier.

Concrete Encased Pipe Work

There are occasions when it is necessary to encase a drainage system in concrete such as a shallow system or if you are installing a system within a metre of a house foundation, as the image to the right shows the concrete pipe surround has been raised up the level of the foundation strip to prevent any settlement to the sub-soil supporting the property.

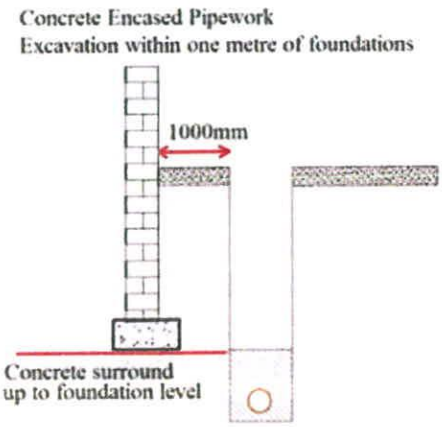

Modern drainage systems are designed to be flexible to some degree and surrounding them in concrete obviously affects this it is therefore necessary to install flexible joints at each collar using a compressible board or similar.

When we excavate dipped of severely misaligned pipe work we often find that the damage was caused by the pouring of concrete over the system, the weight of the concrete can cause the system to slump

CONNECT TO BETTER

Foul water / Gravity sewer / OsmaDrain /



OsmaD Pipe BN BSEN13476 110 SN8 L=3 P/E

4D073

General information

EAN	5011479107775
Catalogue code	4D073

Attributes

Product type	Pipe	**Stiffness class**	SN 8
Material	PVC-U		
Colour	Brown		
Ø	110		
Length	3000 MM		
Width	110 MM		
Height	110 MM		

Packaging

Weight	5.007 kg	**Packaging description**	1 pack = 50 pieces 3 meters = 1 pieces
Volume	51318.4 cm³		
Minimum order quantity	1 piece(s)		

RAINWATER HARVESTING

ONE-WAY FLAP VALVES (ANTI-FLOODING)

One-way non-return valves for drainage systems

- **Effective backflow prevention for stormwater drains.**
- **Also acts as an effective vermin barrier.**
- **Robust ABS housing.**
- **Stainless steel flap valve and pivot.**
- **Integral inspection cover with wing nuts.**
- **Can be opened for maintenance without any need for tools.**
- **Available to suit 100mm, 150mm & 200mm drainage pipes, in-line or terminal.**
- **Ideal for use in domestic and commercial gravity rainwater systems where there is a risk of backflow from the storm drain.**

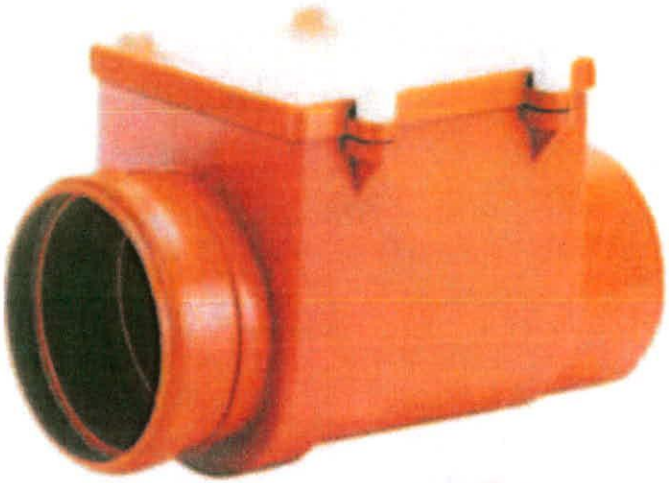



Flap valves give effective protection to rainwater installations which are situated below flood level.

These are high quality units which incorporate a stainless steel flap that closes against an integral seal, thus allowing water to flow in only one direction. If water begins to flow in the opposite direction (backflow), then the flap is forced against the seal. This protects the rainwater tank or filter unit against contamination from drainage water and vermin.

Flap valves should always be used when the overflow from the rainwater system connects to a combined sewer, in order to protect the tank against contamination.

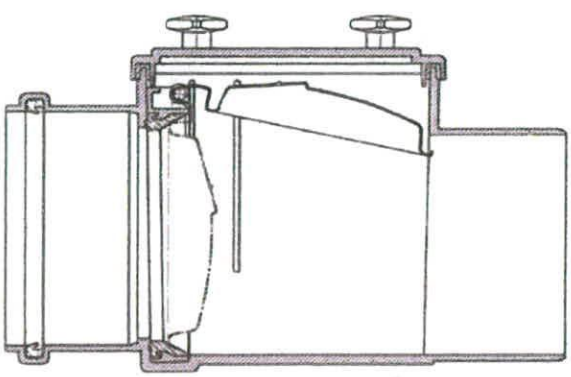

In-line

Terminal

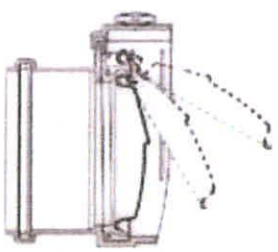

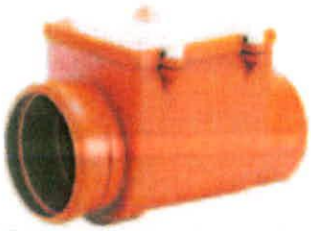

100mm in-line flap valve

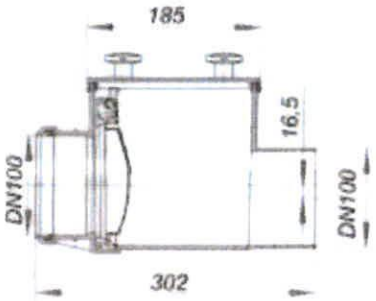



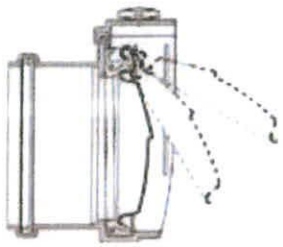

Terminal flap valve to fit to pipe end

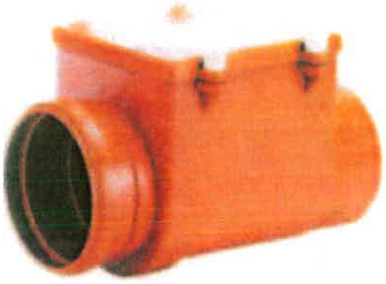

150mm in-line flap valve

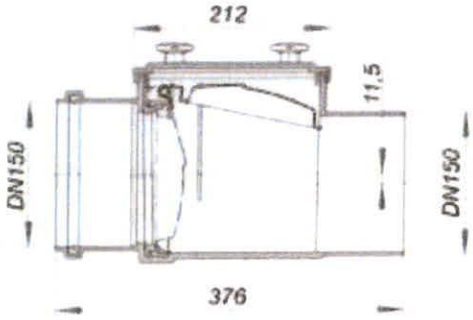

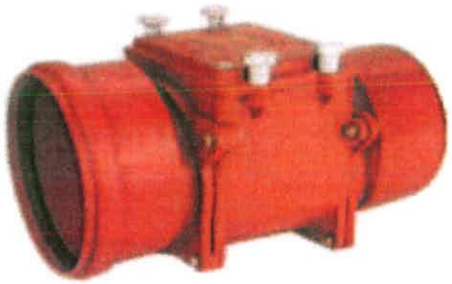

200mm in-line flap valve

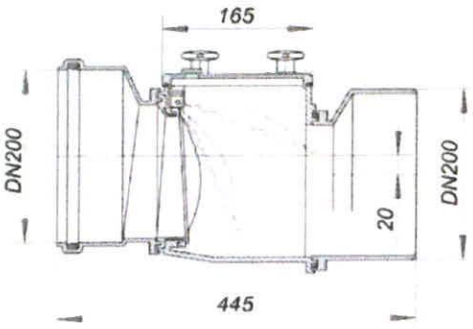

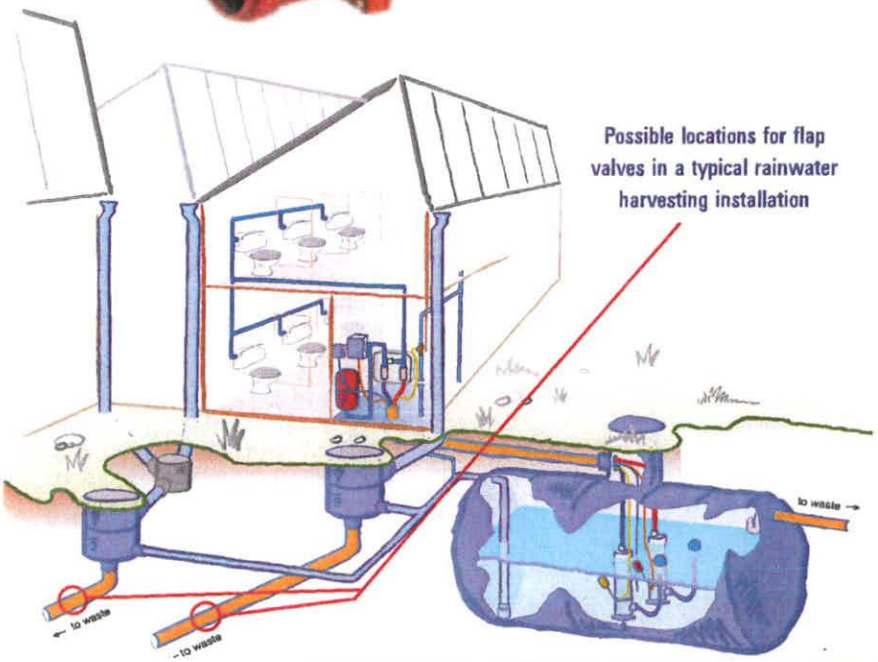

Possible locations for flap valves in a typical rainwater harvesting installation

Designed for quick and easy installation.

These units fit standard UK pipes and are simple to fit. They are also easy to maintain and can be opened without tools.

Once installed, these valves must be accessible for cleaning purposes, so should be built into an access chamber.

NB continuous development may necessitate change in these details without notice E&OE

Rainharvesting Systems Ltd.
The Green Shop
Cheltenham Road, Bisley,
Stroud, Gloucestershire GL6 7BX
Tel: 0845 223 5430
Fax: 01452 772008
E-mail: sales@rainharvesting.co.uk
Website: www.rainharvesting.co.uk

RAINHARVESTING SYSTEMS