The copyright in this document (including its electronic form) shall remain vested in the Designer but the Client shall have a licence to copy and use the document for the purpose for which it was provided. The Designer shall not be liable for the use by any person of this document for any purpose other than that for which the same was provided by the Designer. This document shall not be reproduced in whole or in part or relied upon by third parties for any use whatsoever without the express written authority of the Designer.

NOTES

1. DO NOT SCALE FROM DRAWING
2. ALL DIMENSIONS IN MILLIMITERES UNLESS OTHERWISE SHOWN.
3. ALL LEVELS IN METRES ABOVE ORDINANCE DATUM, NEWLYN
4. STANDARD RETAINING WALL DESIGNS TO BE USED BASED ON LOADING REQUIREMENTS. DESIGN REQUIREMENTS ARE AS FOLLOWS:

a. MINIMUM UPSTAND HEIGHT OF 100 ABOVE GROUND LEVEL AND MINIMUM BURIED DEPTH OF 500.
b. ALLOWABLE BEARING RESISTANCE OF SOIL IS ASSUMED AS 300 kPa.
c. RETAINED SOIL DENSITY IS 19kN/m^3
d. GRANULAR FILL SHALL BE GENERAL GRADE CLASS 6N AND SHALL HAVE CHARACTERISTIC PHI VALUE OF 35°.
e. BLINDING CONCRETE CLASS ST1.

4. BURIED CONCRETE SURFACES TO RECEIVE 2 No. COATS OF BITUMINOUS PAINT TO 100 BELOW GROUND LEVEL.

5. FOR INFORMATION ON TYPE 5&6 RETAINING WALLS SEE FOLLOWING DRAWING REFERENCES:
   GENERAL ARRANGEMENTS - TYPE 5: MPT3-TP0-00-WDG-604
   TYPE 6: MPT3-TP0-00-WDG-605
   REINFORCEMENT DETAILS - TYPE 5: MPT3-TP0-00-WDD-604
   TYPE 6: MPT3-TP0-00-WDD-605
6. FOR RAMP CROSS SECTION DETAILS REFER TO DRAWING MPT3-CS1-02-KDG-661
7. FOR RAMP HANDRAIL DETAILS AND LAYOUT REFER TO DRAWING MPT3-CS1-02-LDP-620
8. CLASS 2 HANDRAILS TO BE DESIGNED IN ACCORDANCE WITH BS 7818

KEY

RETAINING WALL TYPE 5 REFER TO DRAWING MPT3-TP0-00-WDG-604 FOR DETAILS

RETAINING WALL TYPE 6 REFER TO DRAWING MPT3-TP0-00-WDG-605 FOR DETAILS

SETTING OUT INFORMATION			
REFERENCE	EASTINGS (m)	NORTHINGS (m)	ELEVATION (m AOD)
SOP1	44133.946	52295.556	70.200
SOP2	44134.986	52290.665	70.200
SOP3	44132.577	52295.264	70.200
SOP4	44133.616	52290.374	70.200
SOP5	44135.817	52286.752	70.200
SOP6	44137.377	52279.416	70.200
SOP7	44134.448	52286.461	70.200
SOP8	44136.007	52279.125	70.200

SETTING OUT INFORMATION			
REFERENCE	EASTINGS (m)	NORTHINGS (m)	ELEVATION (m AOD)
SOP9	44138.061	52279.561	70.200
SOP10	44140.660	52267.335	70.200
SOP11	44136.007	52279.125	70.200
SOP12	44138.606	52266.898	70.200
SOP13	44139.976	52267.189	70.200
SOP14	44141.535	52259.853	70.200
SOP15	44138.606	52266.898	70.200
SOP16	44140.165	52259.562	70.200

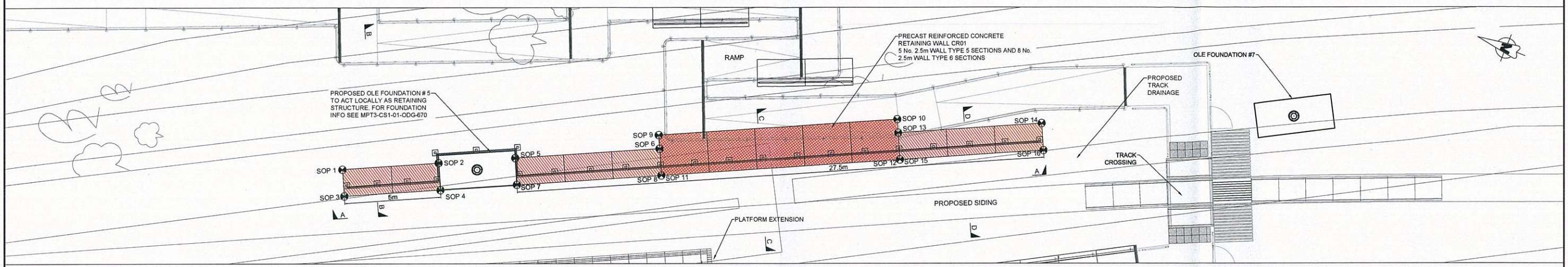

PLAN

SCALE 1:100 @ A1; 1:200 @ A3

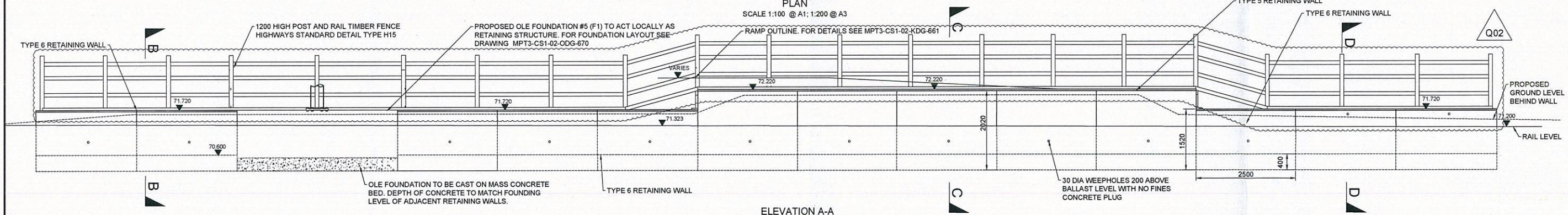

ELEVATION A-A

SCALE 1:50 @ A1; 1:100 @ A3

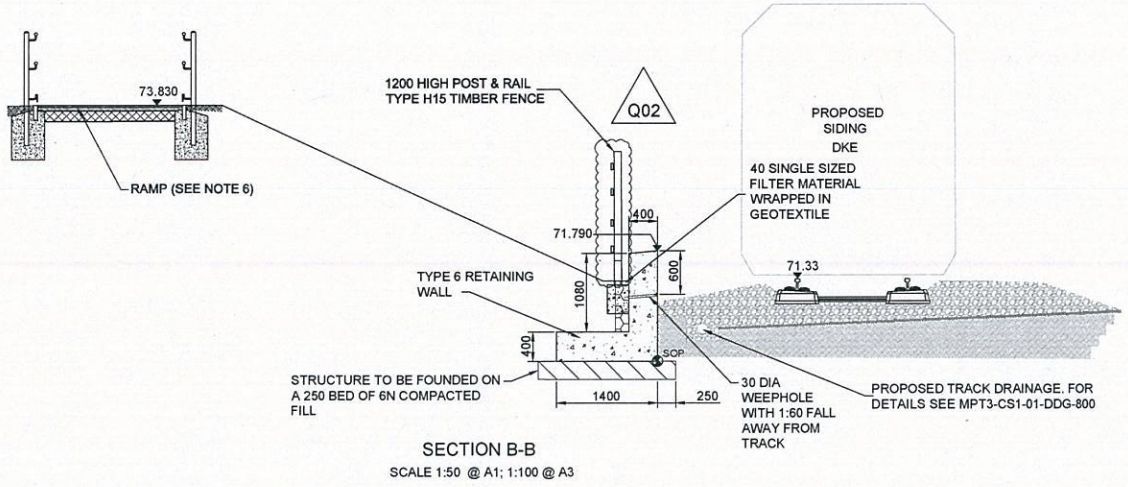

SECTION B-B

SCALE 1:50 @ A1; 1:100 @ A3

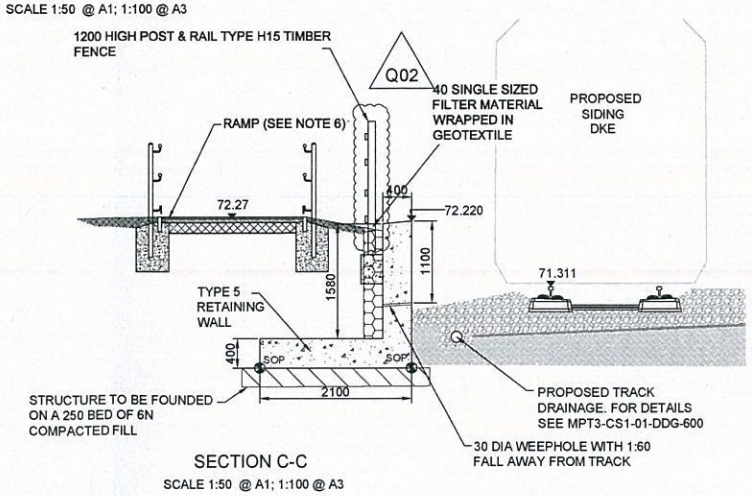

SECTION C-C

SCALE 1:50 @ A1; 1:100 @ A3

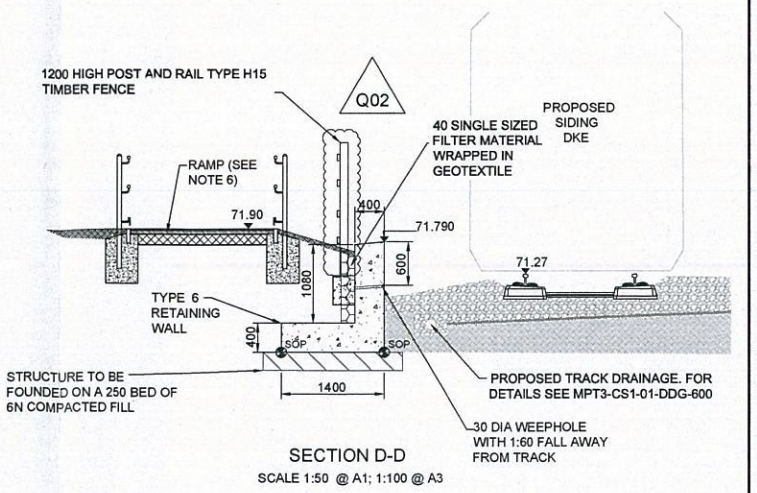

SECTION D-D

SCALE 1:50 @ A1; 1:100 @ A3

0 0.5 1 2 3 4 5m

SCALE 1:50 @ A1; 1:100 @ A3

LOCATION PLAN

CRUMPSALL STOP

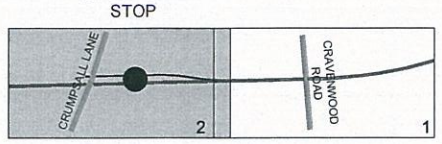

KEY

FOR CONSTRUCTION

REV	DATE	DETAIL	MADE	CHK'D	APP'D
Q02	02.06.17	MPT COMMENTS INCORPORATED	RG	LH	NMD
Q01	12.04.17	ISSUED FOR CONSTRUCTION	JS	LH	MW

CLIENT: Transport for Greater Manchester

MPT Laing O'Rourke VolkerRail Thales

DESIGN:	AS
CAD:	JS
CHK'D:	LH
APP'D:	ND
SCALE:	AS SHOWN
DATE:	12.04.17

MANCHESTER METROLINK
TRAFFORD PARK LINE

TITLE: CRUMPSALL LANE ACCESS RAMP RETAINING WALL CR01 GENERAL ARRANGEMENT

DRG No: MPT3-CS1-02-WDG-611

REV: Q02

cm A1

DRG Path: C:\pworking\jacom_eu\vnessa\jd0119905\MPT3-CS1-02-WDG-611.dwg User: EVANSAJ Plot time: 02-06-17 @ 1:40pm

The copyright in this document (including its electronic form) shall remain vested in the Designer but the Client shall have a licence to copy and use the document for the purpose for which it was provided. The Designer shall not be liable for the use by any person of this document for any purpose other than that for which the same was provided by the Designer. This document shall not be reproduced in whole or in part or relied upon by third parties for any use whatsoever without the express written authority of the Designer.

NOTES

1. DO NOT SCALE FROM DRAWING
2. ALL DIMENSIONS IN MILLIMETERS UNLESS OTHERWISE SHOWN
3. FOR INFORMATION ON TYPE 6 RETAINING WALLS SEE FOLLOWING DRAWING REFERENCES:

   GENERAL ARRANGEMENTS
   - TYPE 6: MPT3-TP0-00-WDG-605

   REINFORCEMENT DETAILS
   -TYPE 6: MPT3-TP0-00-WDD-605

4. STANDARD RETAINING WALL DESIGNS TO BE USED BASED ON LOADING REQUIREMENTS. DESIGN REQUIREMENTS ARE AS FOLLOWS:

a. MINIMUM UPSTAND HEIGHT OF 100 AND MINIMUM BURIED DEPTH OF 500.
b. ALLOWABLE BEARING RESISTANCE OF SOIL IS ASSUMED AS 300 KPA.
c. RETAINED SOIL DENSITY IS 19KN/M^3
d. GRANULAR FILL SHALL BE GENERAL GRADE CLASS 6N AND SHALL HAVE CHARACTERISTIC Ø VALUE OF 35°.
e. BLINDING CONCRETE CLASS ST1.

6 BURIED CONCRETE SURFACES TO RECEIVE 2 NO. COATS OF BITUMINOUS PAINT TO 150 BELOW GROUND LEVEL.

7 FOR RAMP CROSS SECTION DETAILS REFER TO DRAWING MPT3-CS1-02-KDG-661

8 FOR RAMP HANDRAIL DETAILS AND LAYOUT REFER TO DRAWING MPT3-CS1-02-LDP-620

KEY

RETAINING WALL TYPE 6 REFER TO DRAWING MPT3-TP0-00-WDG-605 FOR DETAILS

SETTING OUT INFORMATION			
REFERENCE	EASTINGS (m)	NORTHINGS (m)	ELEVATION (m AOD)
SOP1	44126.522	52345.674	71.070
SOP2	44129.095	52333.441	71.070
SOP3	44125.153	52345.386	71.070
SOP4	44127.726	52333.154	71.070

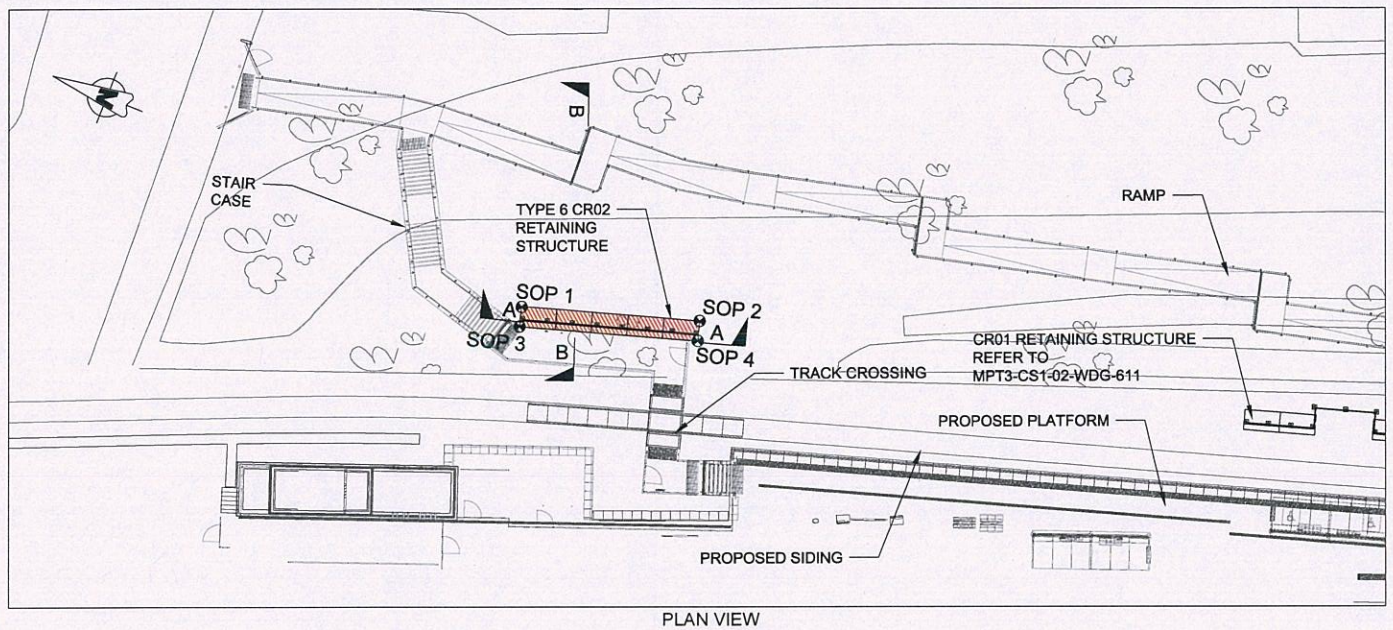

PLAN VIEW
SCALE 1:50 @ A1; 1:100 @A3

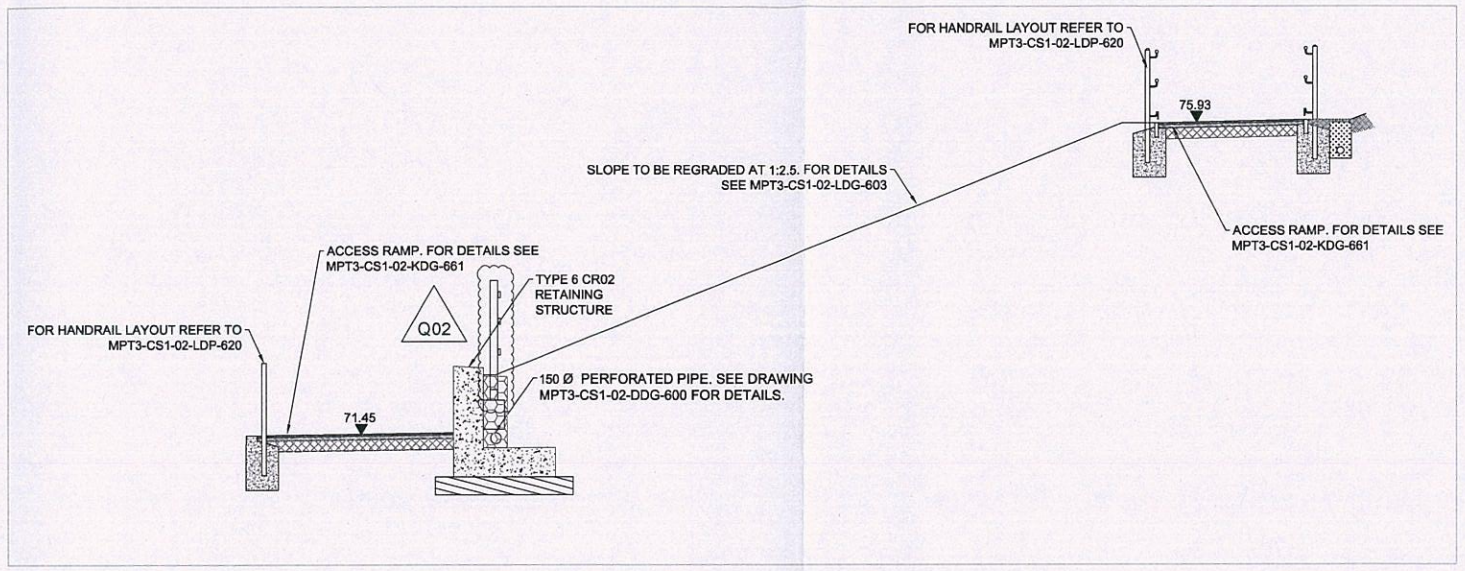

SECTION B-B
SCALE 1:50 @A1; 1:100 @ A3

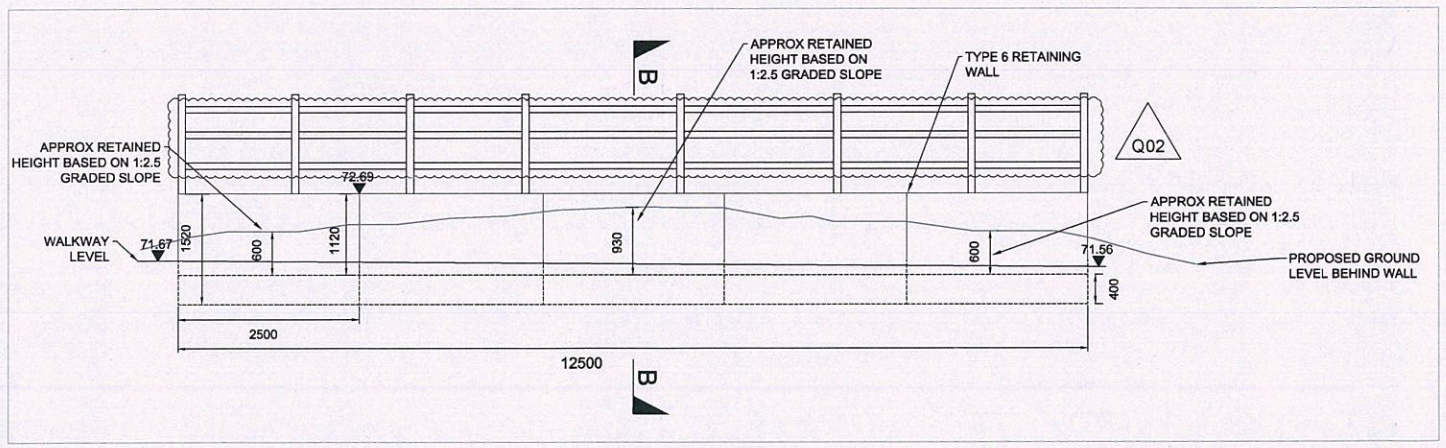

ELEVATION A-A
SCALE 1:50 @ A1 ; 1:100@ A3

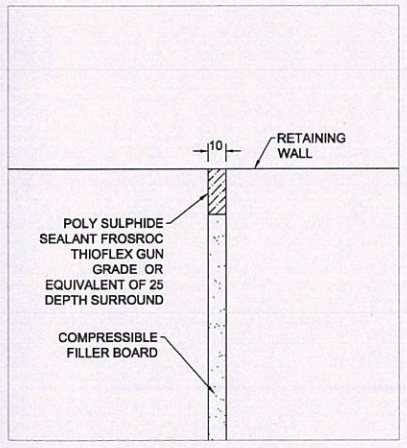

JOINT DETAIL
SCALE 1:2 @ A1; 1:4 @A3

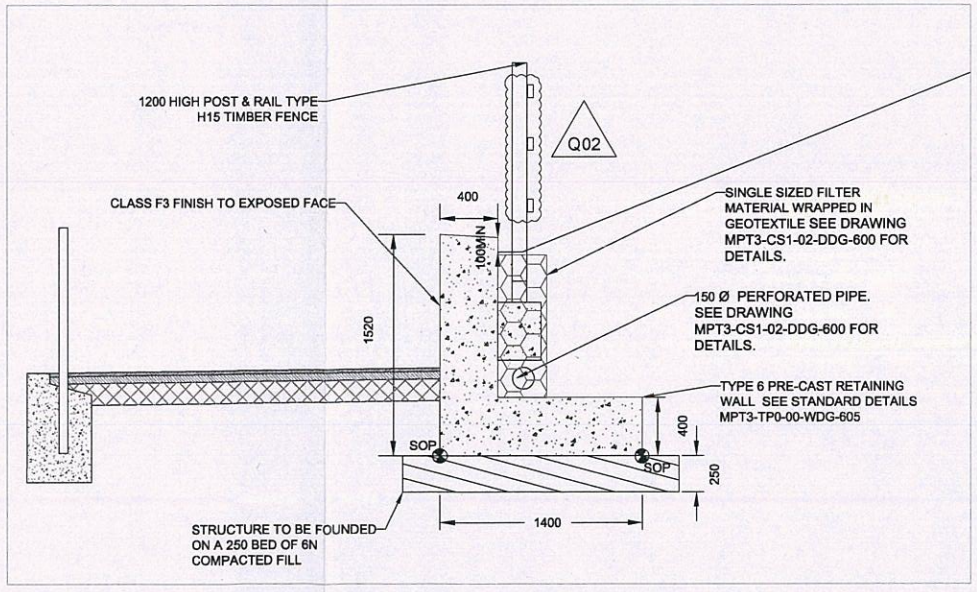

TYPICAL SECTION
SCALE 1:25 @ A1; 1:50 @A3

0 0.5 1 2 3 4 5m
SCALE 1:50 @ A1; 1:100 @ A3

0 0.5 1.0 1.5 2.0 2.5m
SCALE 1:25 @ A1; 1:50 @ A3

LOCATION PLAN

CRUMPSALL STOP

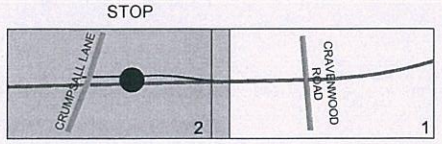

KEY

FOR CONSTRUCTION

REV.	DATE	DETAIL	MADE	CHK'D	APP'D
Q02	02.06.17	MPT COMMENTS INCORPORATED	RG	LH	NMD
Q01	12.04.17	ISSUED FOR CONSTRUCTION	JS	LH	MW

CLIENT: Transport for Greater Manchester

MPT Laing O'Rourke VolkerRail | Thales

DESIGN:	AS
CAD:	JS
CHK'D:	LH
APP'D:	MW
SCALE:	AS SHOWN
DATE:	12.04.17

MANCHESTER METROLINK
TRAFFORD PARK LINE

TITLE:
CRUMPSALL LANE ACCESS RAMP
RETAINING WALL CR02
GENERAL ARRANGEMENT

DRG No: MPT3-CS1-02-WDG-612

REV: Q02

cm | A1

DRG Path: C:\pwworking\aecom_au\evansaj\d0119956\MPT3-CS1-02-WDG-612.dwg User: EVANSAJ Plot time: 02-06-17 @ 2:04pm

The copyright in this document (including its electronic form) shall remain vested in the Designer but the Client shall have a licence to copy and use the document for the purpose for which it was provided. The Designer shall not be liable for the use by any person of this document for any purpose other than that for which the same was provided by the Designer. This document shall not be reproduced in whole or in part or relied upon by third parties for any use whatsoever without the express written authority of the Designer.

NOTES:

1. DO NOT SCALE FROM DRAWING
2. ALL DIMENSIONS ARE IN MILLIMETRES UNLESS OTHERWISE SHOWN
3. ALL LEVELS ARE IN METRES ABOVE ORDNANCE DATUM NEWLYN
4. GROUND PARAMETERS FOR SHEET PILE DESIGN ARE BASED ON NEAREST BOREHOLE SAMPLE BHCRP1. ASSUMED SAME SOIL MAKE UP AT SHEET PILE LOCATION. REFER TO GROUND INVESTIGATION REPORT MPT3-CS0-00-GRP-600
5. SHEET PILE WALLS HAVE BEEN BEEN CALCULATED FOR PLANNED EXCAVATION OF 500 ACCORDING TO BS 8002:2015. ANY FUTURE EXCAVATIONS NEAR THE WALL ABOVE THIS WILL NEED TO BE ASSESSED.
6. ALL STRUCTURAL SHEET PILES TO BE CONSTRUCTED FROM HOT ROLLED STEEL, GRADE S355 GP IN ACCORDANCE WITH BS EN 10248:1996.
7. STRIP FOOTING DESIGN IS APPLICABLE TO FORMATION CONDITIONS HAVING A PRESUMED ALLOWABLE BEARING RESISTANCE OF 300KN/M2. ANY UNSUITABLE MATERIAL AT OR BENEATH FORMATION LEVEL IS TO BE REMOVED AND REPLACED WITH MASS CONCRETE
8. CONTRACTOR IS RESPONSIBLE FOR DETERMINING THE PILE DRIVING METHOD AND ENSURING NOISE ASSOCIATED WITH PILE DRIVING IS MAINTAINED WITHIN ACCEPTABLE LIMITS. IT IS RECOMMENDED THAT A SPECIALIST PILE CONTRACTOR BE CONSULTED BY MPT TO AGREE INSTALLATION, DRIVEABILITY AND OTHER REQUIREMENTS.

NOTES:

9. MATERIALS:

MORTAR: DESIGNATION (II) TO BS 5628 (1:4 CEMENT : SAND), ACCELERATORS NOT TO BE USED.

CONCRETE : BS 8500-1: 2002 AND TO CONFORM TO BS EN 206-1: 2000 AND BS 8500-2: 2000.

10. EXISTING GROUND LEVEL TROUGHS ADJACENT THE SER BUILDING TO BE DIVERTED PRIOR TO PILING WORKS

- JFESP-3W STEEL SHEET PILES

© Crown copyright and database rights 2016 Ordnance Survey 0100022610.
Use of this data is subject to terms and conditions: You are granted a non-exclusive, royalty free, revocable licence solely to view the Licensed Data for non-commercial purposes for the period during which Transport for Greater Manchester makes it available; you are not permitted to copy, sub-license, distribute, sell or otherwise make available the Licensed Data to third parties in any form ; and third party rights to enforce the terms of this licence shall be reserved to Ordnance Survey.

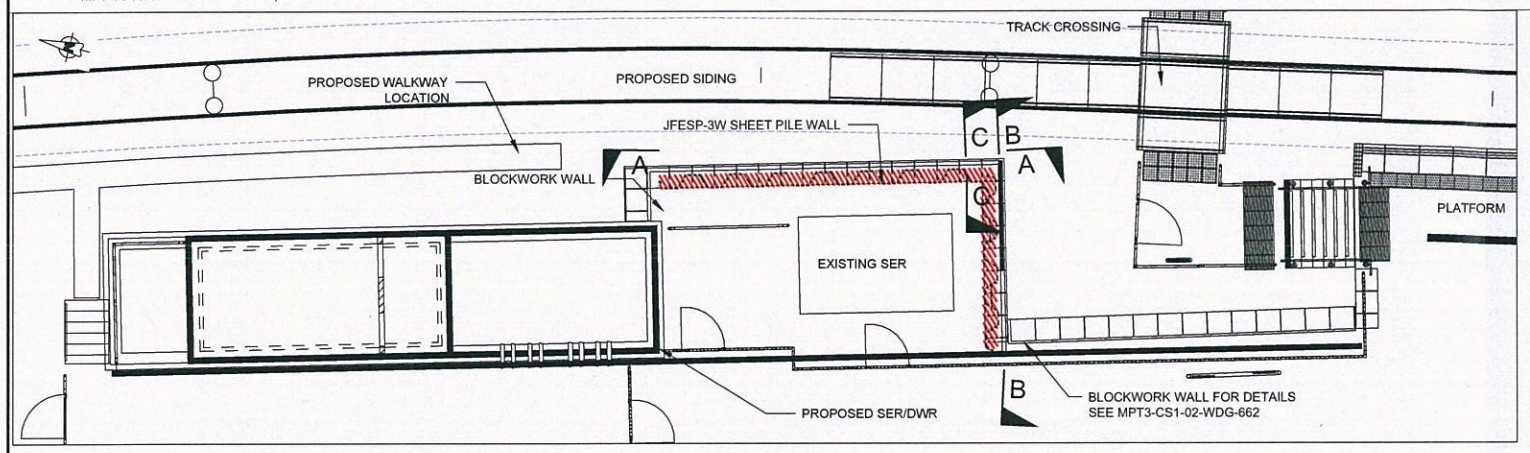

PLAN
SCALE 1:100 @ A1; 1:200 @A3

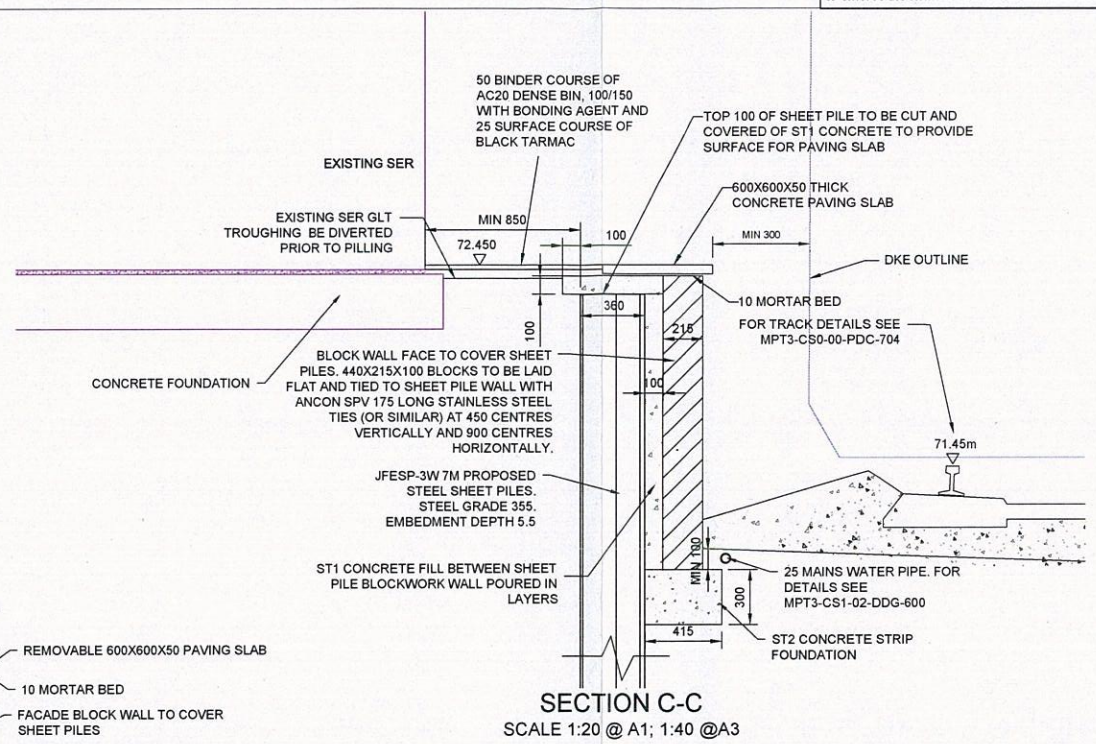

SECTION C-C
SCALE 1:20 @ A1; 1:40 @A3

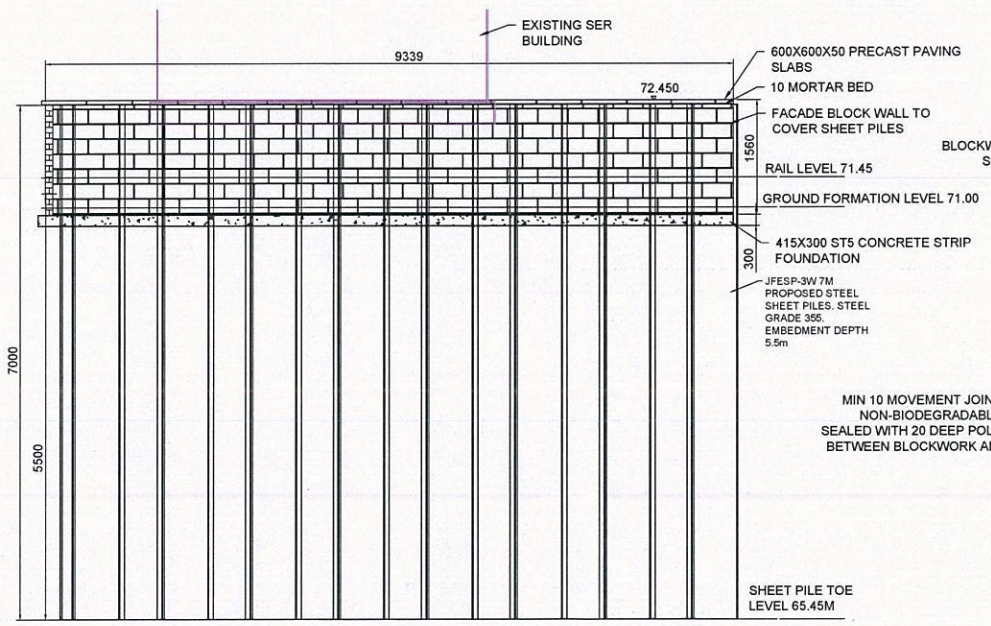

ELEVATION A-A
SCALE 1:50 @ A1; 1:100 @A3

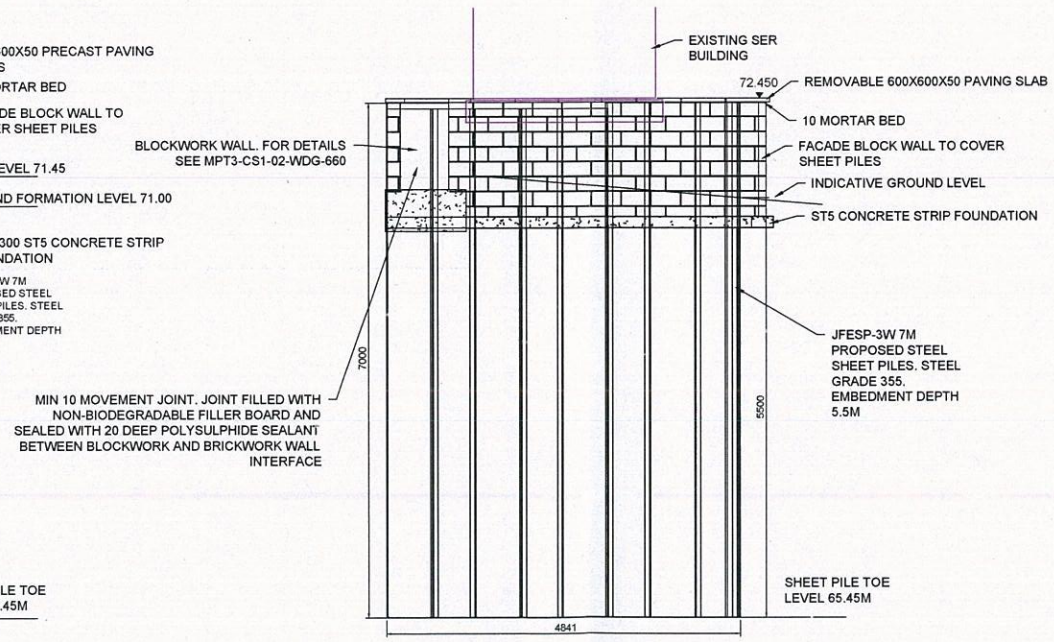

ELEVATION B-B
SCALE 1:50 @ A1; 1:100 @A3

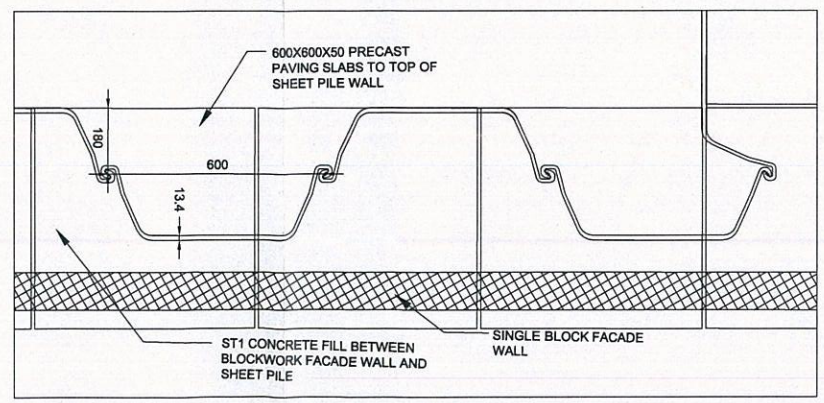

TYPICAL DETAIL AND CORNER
SCALE 1:100 @ A1; 1:200 @A3

0 1 2 4 6 8 10m
SCALE 1:100 @ A1; 1:200 @ A3

0 0.5 1 2 3 4 5m
SCALE 1:50 @ A1; 1:100 @ A3

0 0.2 0.4 0.8 1.2 1.6 2.0m
SCALE 1:20 @ A1; 1:40 @ A3

LOCATION PLAN

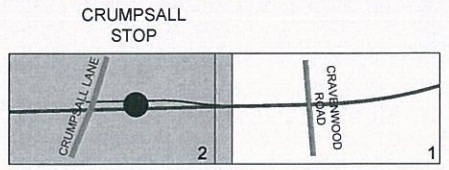

FOR CONSTRUCTION

REV	DATE	DETAIL	MADE	CHK'D	APP'D
Q01	12.04.17	ISSUED FOR CONSTRUCTION	AE	LH	MW

CLIENT: Transport for Greater Manchester

MPT Laing O'Rourke Volkerfitzl | Thales

DESIGN:	AE
CAD:	AE
CHK'D:	LH
APP'D:	MW
SCALE:	AS SHOWN
DATE:	07.04.17

MANCHESTER METROLINK
TRAFFORD PARK LINE

TITLE:
CRUMPSALL STOP
DWR/SER RETAINING WALL
TYPICAL SECTION AND GENERAL ARRANGEMENT

DRG No: MPT3-CS1-02-WDG-651

REV: Q01

cm A1

DRG Path: C:\sworking\alecom_ai\cgonet\d0119965\MPT3-CS1-02-WDG-651.dwg User: gonet Plot time: 13-04-17 @ 1:25cm

The copyright in this document (including its electronic form) shall remain vested in the Designer but the Client shall have a licence to copy and use the document for the purpose for which it was provided. The Designer shall not be liable for the use by any person of this document for any purpose other than that for which the same was provided by the Designer. This document shall not be reproduced in whole or in part or relied upon by third parties for any use whatsoever without the express written authority of the Designer.

NOTES:

1. DO NOT SCALE FROM DRAWING
2. ALL DIMENSIONS ARE IN MILLIMETRES UNLESS OTHERWISE SHOWN
3. ALL LEVELS ARE IN METRES ABOVE ORDNANCE DATUM NEWLYN
4. TO BE READ IN CONJUNCTION WITH PLATFORM WALL DETAILS ; MPT3-CS1-02-KDD-661 & 662 FOR TYPICAL SECTIONS AND PLAN DETAILS.
5. SETTING OUT POINTS REFERS TO THE FRONT TOE OF THE MASONARY. (SEE BELOW DETAIL)

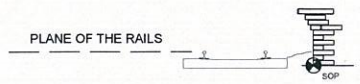

6. VERTICAL / HORIZONTAL ALIGNMENT OF THE TRACK TO BE MONITORED DURING CONSTRUCTION OF THE WORKS.
7. ALL MORTAR JOINTS TO BE 10 UNLESS NOTED OTHERWISE
8. DESIGN IS BASED ON MINIMUM ALLOWABLE BEARING PRESSURE OF 50KN/M² , MINIMUM COEFFICIENT OF SLIDING 0.4 (BETWEEN GROUND AND CONCRETE).
9. ANY NEW INFILL MATERIAL SHALL BE FREE DRAINING 6N OR SP TO SHW, COMPACTED TO 95% OF THE DRY DENSITY.
10. MATERIALS:
CONCRETE BLOCKS: 440X215X100, DENSITY ≥ 1800KG/M ,
WEIGHT - MAXIMUM 20KG WEIGHT PER BLOCK, COMPRESSIVE STRENGTH ≥ 15N/MM² , USE SRPC BINDER, AGGREGATES TO BS 882 OR BS EN 12620 (SOLID OVERSAIL BLOCKS IF USED: 560X220X220 - WEIGHT=48KG/BLOCK APPROX.)

MORTAR: DESIGNATION (II) TO BS 5628 (1:4 CEMENT : SAND), ACCELERATORS NOT TO BE USED.

CONCRETE : BS 8500-1: 2002 AND TO CONFORM TO BS EN 206-1: 2000 AND BS 8500-2: 2000.

ALL SPECIFIED MANUFACTURERS MATERIALS NOTED ON THE DRAWINGS SHOULD BE INTERPRETED TO BE "OR SIMILAR APPROVED".

11. ALL 10 MOVEMENT JOINTS TO BE FILLED WITH NON-BIODEGRABLE FILLER BOARD WITH A 20 DEEP POLYSULPHIDE EPOXY SEALANT.
12. 10 MOVEMENT JOINTS TYPICALLY EVERY 12 COPERS. POLYSULPHIDE SEALANT TO BE APPLIED TO ALL VERTICAL AND HORIZONTAL SURFACES.

KEY:

PROPOSED PLATFORM WALL

EXISTING PLATFORM WALL

SETTING OUT INFORMATION			
REFERENCE	E (m)	N (m)	ELEVATION (m AOD)
SOP1	44114.395	52336.792	71.103
SOP2	44117.043	52327.728	71.103
SOP3	44121.046	52328.782	71.103
SOP4	44132.313	52275.971	70.993
SOP5	44127.913	52274.784	71.993
SOP6	44120.467	52271.546	70.950
SOP7	44115.939	52270.285	71.400

© Crown copyright and database rights 2016 Ordnance Survey 0100022610.
Use of this data is subject to terms and conditions: You are granted a non-exclusive, royalty free, revocable licence solely to view the Licensed Data for non-commercial purposes for the period during which Transport for Greater Manchester makes it available; you are not permitted to copy, sub-license, distribute, sell or otherwise make available the Licensed Data to third parties in any form ; and third party rights to enforce the terms of this licence shall be reserved to Ordnance Survey.

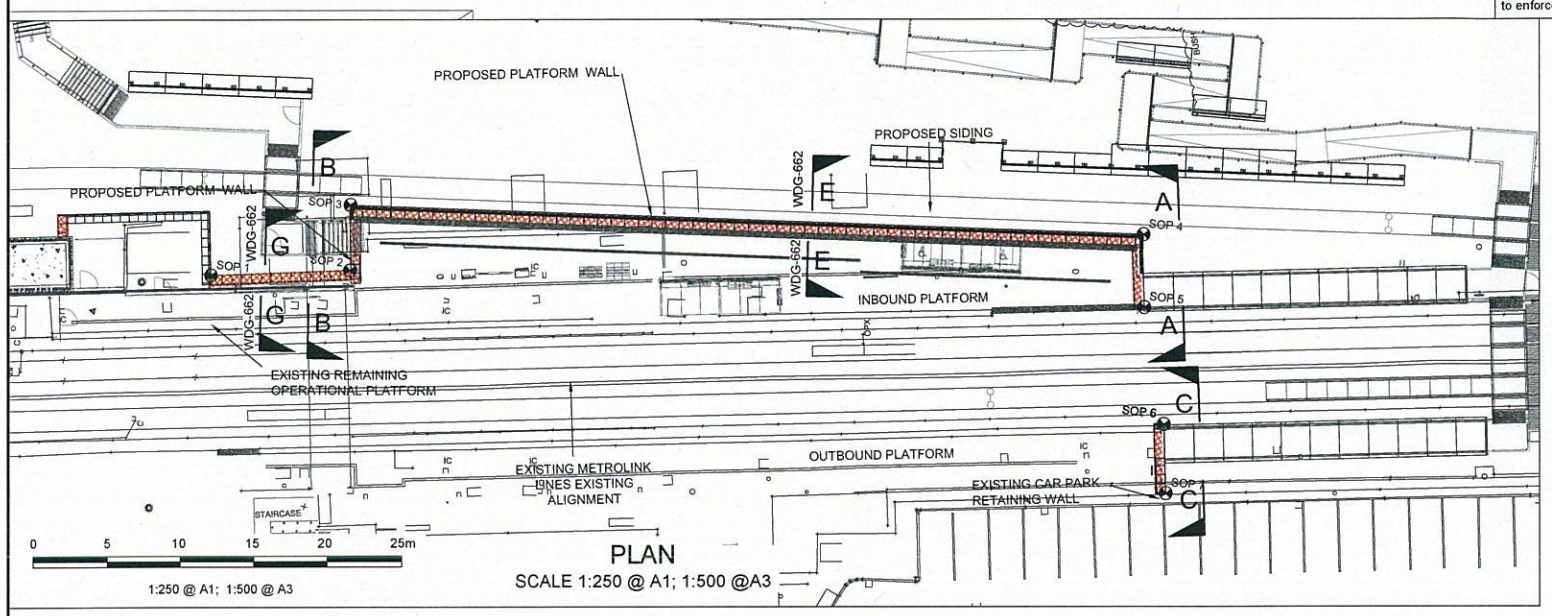

PLAN
SCALE 1:250 @ A1; 1:500 @A3

1:250 @ A1; 1:500 @ A3

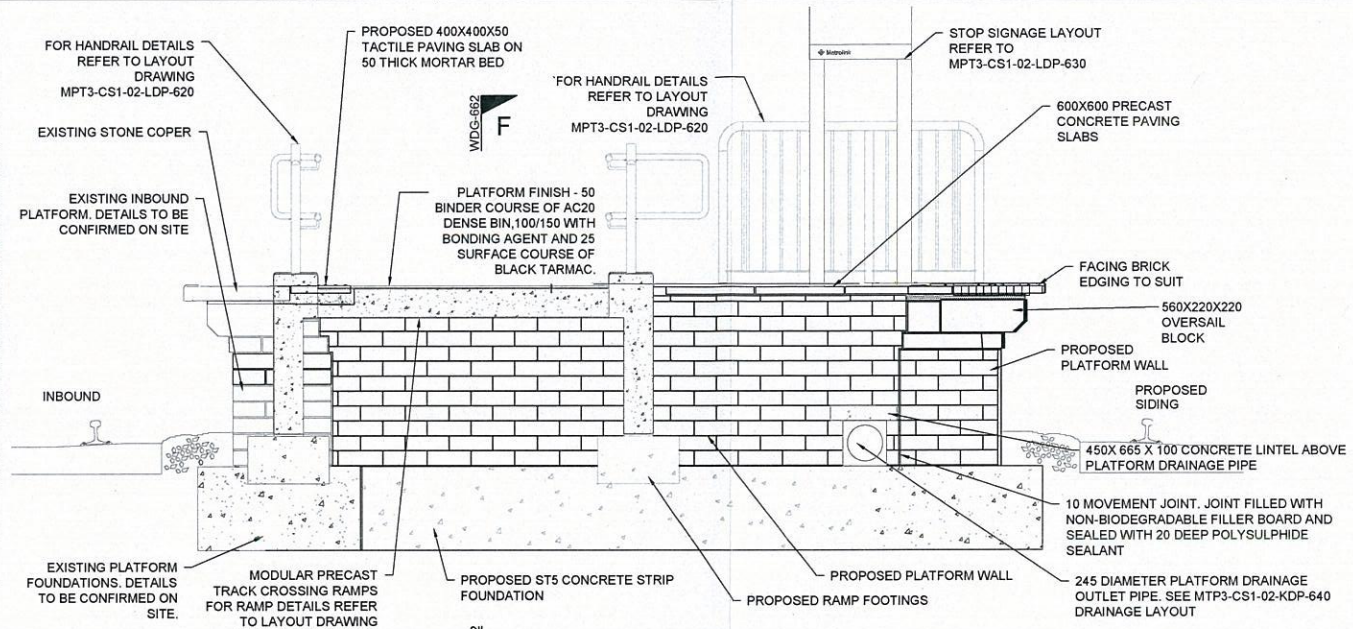

ELEVATION A-A
SCALE 1:25 @ A1; 1:50 @A3

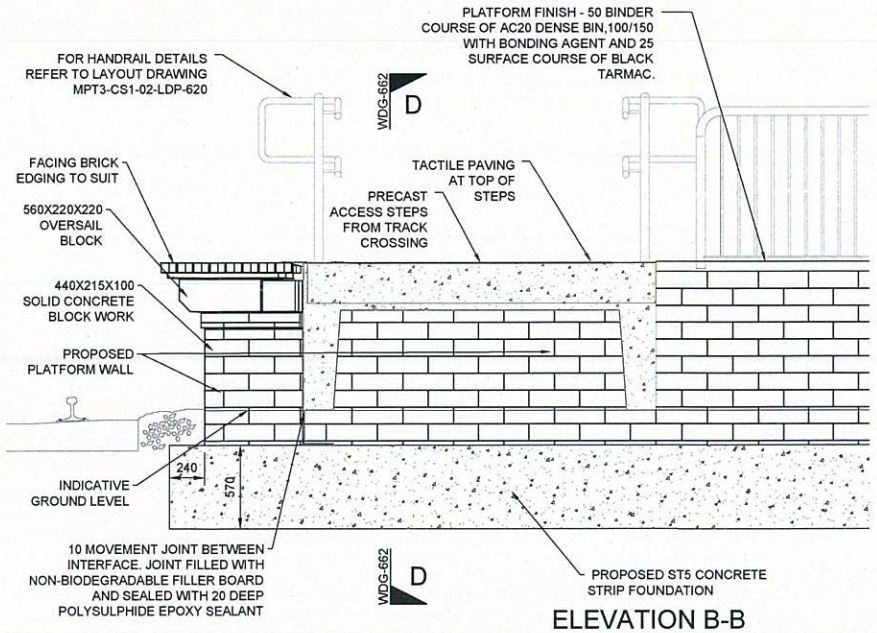

ELEVATION B-B
SCALE 1:25 @ A1; 1:50 @A3

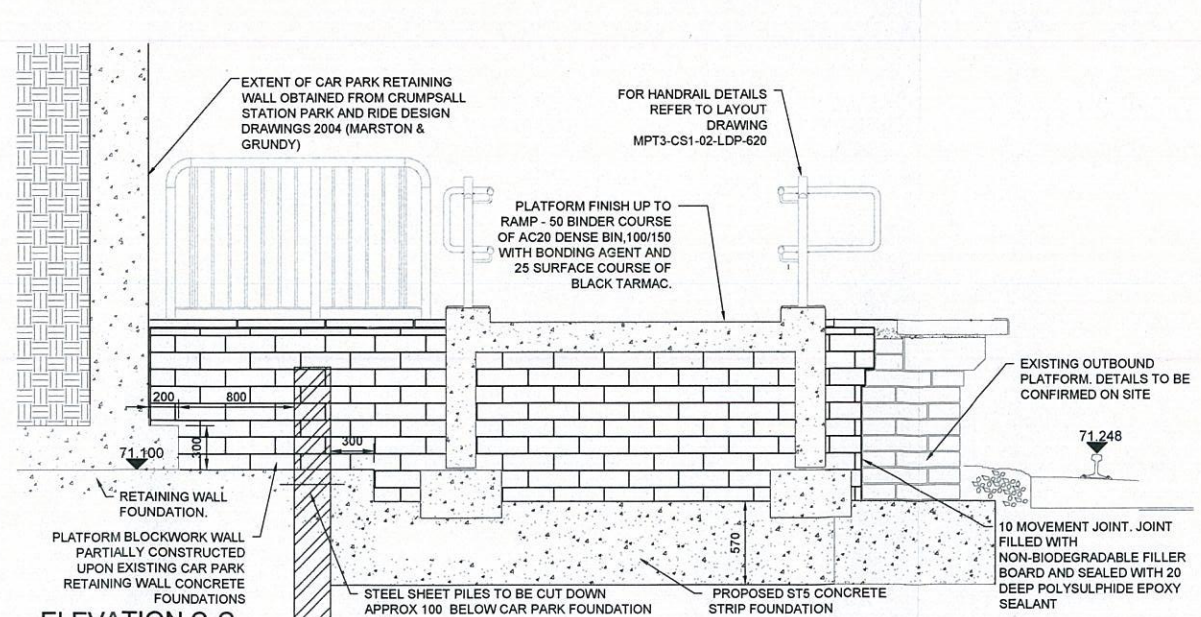

ELEVATION C-C
SCALE 1:25 @ A1; 1:50 @A3

0 0.5 1.0 1.5 2.0 2.5

1:25 @ A1; 1:50 @ A3

LOCATION PLAN

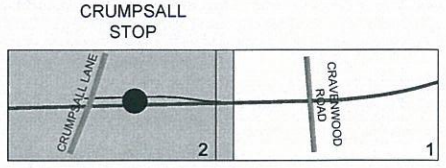

FOR CONSTRUCTION

REV	DATE	DETAIL	MADE	CHK'D	APP'D
Q01	12.04.17	ISSUED FOR CONSTRUCTION	AE	LH	MW

CLIENT: Transport for Greater Manchester

MPT Laing O'Rourke Volker Rail | Thales

DESIGN: AE
CAD: JS
CHK'D: LH
APP'D: MW
SCALE: AS SHOWN
DATE: 12.04.17

MANCHESTER METROLINK
TRAFFORD PARK LINE

TITLE:
CRUMPSALL STOP
PLATFORM WALLS
GENERAL ARRANGEMENT

DRG No' MPT3-CS1-02-WDG-660

REV: Q01

cm | A1

DRG Path: C:\\workingfilescom_au\gzrer1\d0119965\MPT3-CS1-02-WDG-660.dwg User: gzrer1 Plot time: 13-04-17 @ 1:33pm