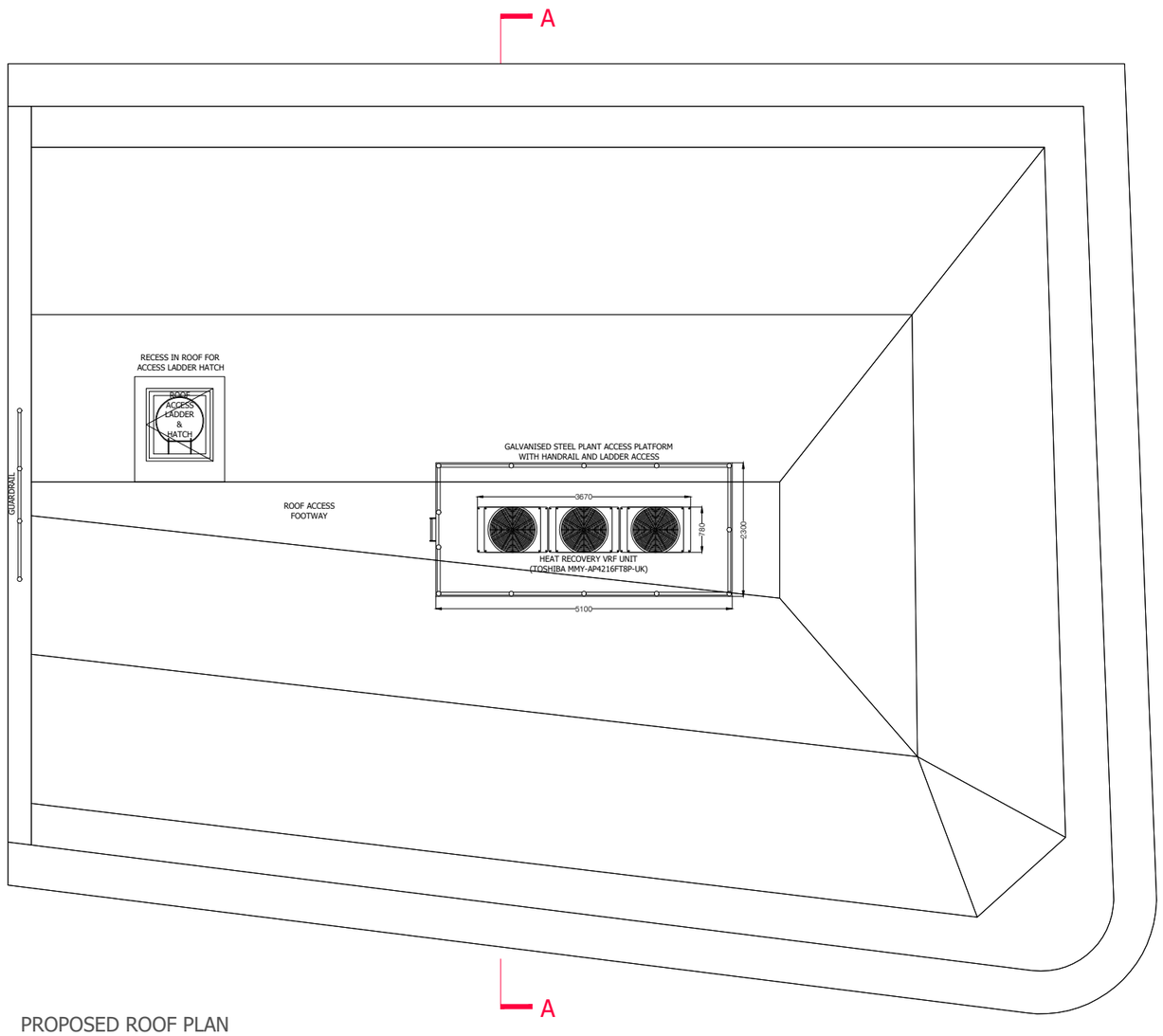

PROPOSED ROOF PLAN

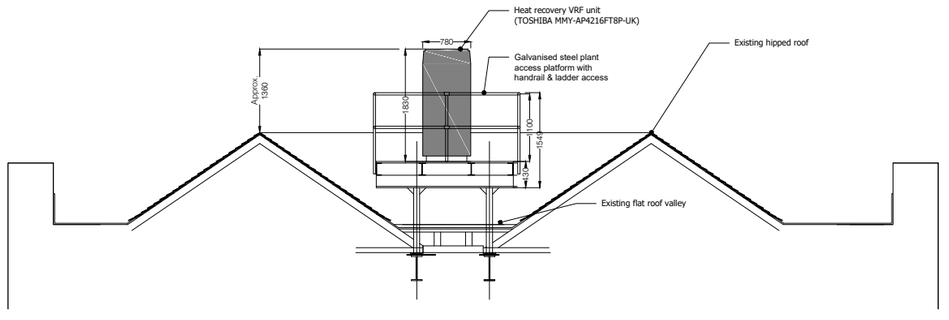

PROPOSED ROOF SECTION A-A

A Section added. 13/09/2017

REVISIONS

four architecture
cardiff . edinburgh . london . sheffield
Talbot Chambers
2-6 North Church Street
Sheffield, S1 2DH
0114 249 0944

© This drawing remains the Copyright of Four Architecture and Design. and may not be reproduced in whole or in any part without prior written permission.

NOTE:
All prorietory goods and materials are to be fitted in accordance with manufacturer's instructions, Codes of Practice and British Standards.
All dimensions to be verified by the Contractor on site.
Do not scale drawings, work to figured dimensions only.

CLIENT: Nationwide

MANCHESTER 0708
Branch Investment Programme

PROJECT			DRAWING		
74-76 MARKET STREET MANCHESTER M1 1PN			Proposed Plans Roof		
SCALE @ A1: 1:50	SCALE @ A3: 1:100	DATE: 02-08-2017	PROJECT NUMBER: 26942	DRAWING NUMBER: PL_ROOF	REVISION: A
DRAWN BY: -	CHECKED: -	STATUS: -			