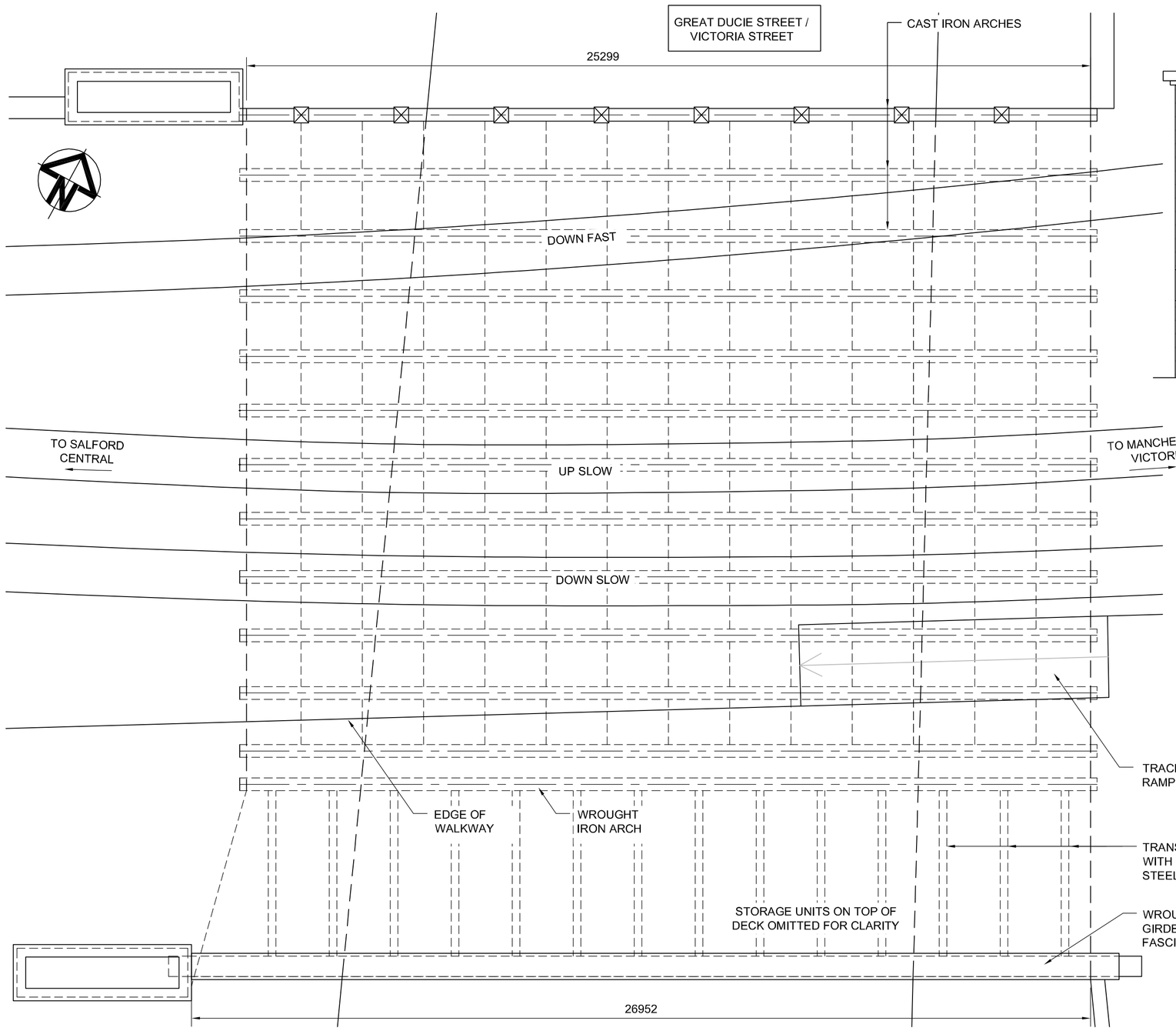

GENERAL ARRANGEMENT PLAN ON DECK DSE 146 SPAN 130
1 : 100

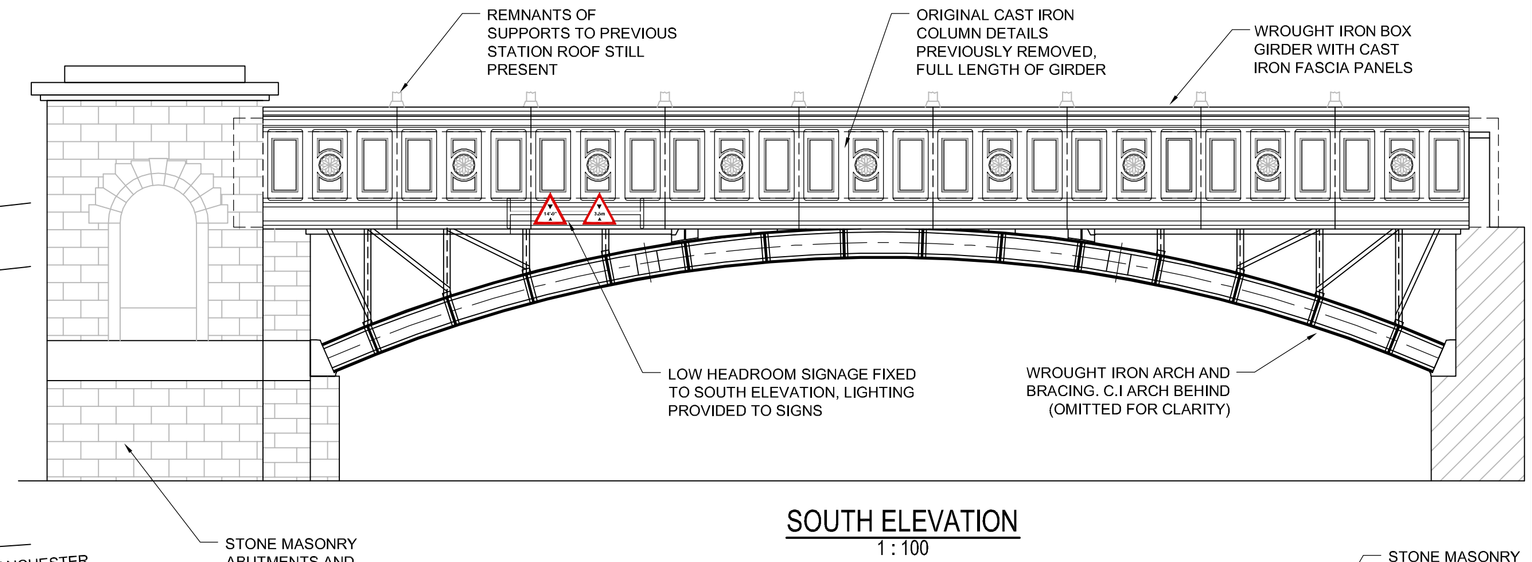

SOUTH ELEVATION
1 : 100

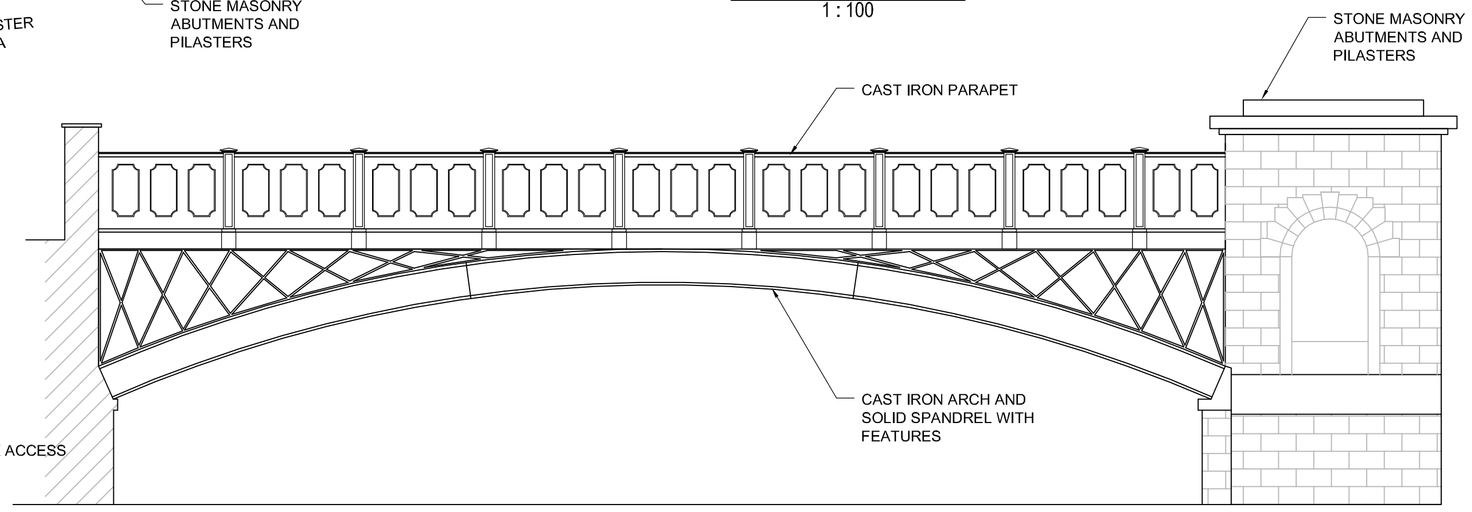

NORTH ELEVATION
1 : 100

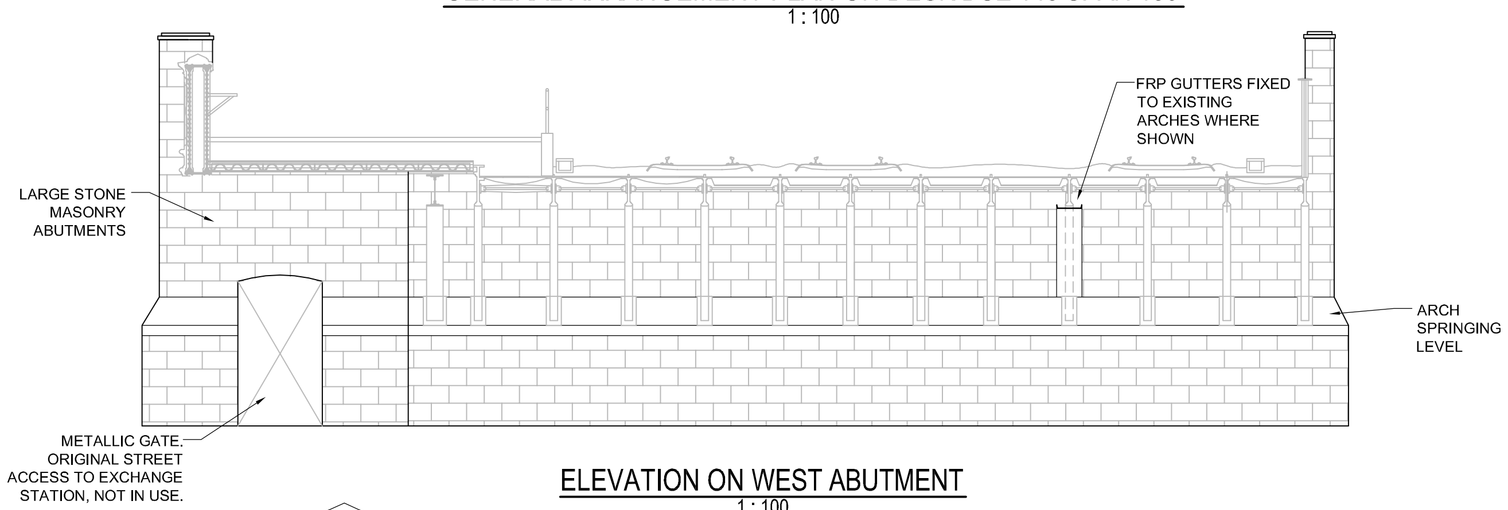

ELEVATION ON WEST ABUTMENT
1 : 100

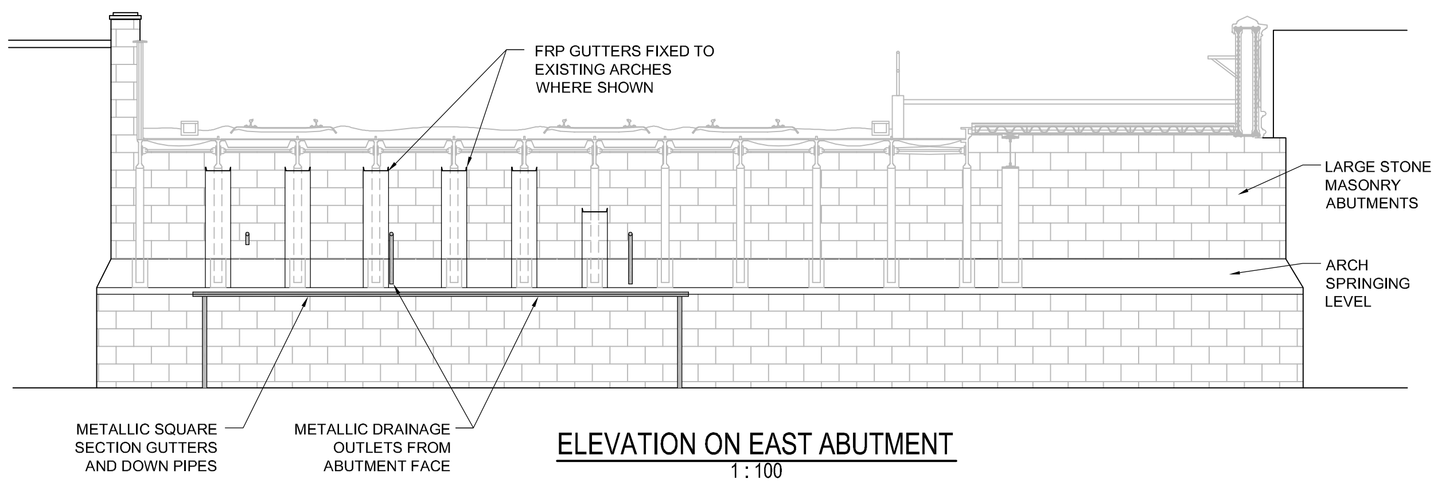

ELEVATION ON EAST ABUTMENT
1 : 100

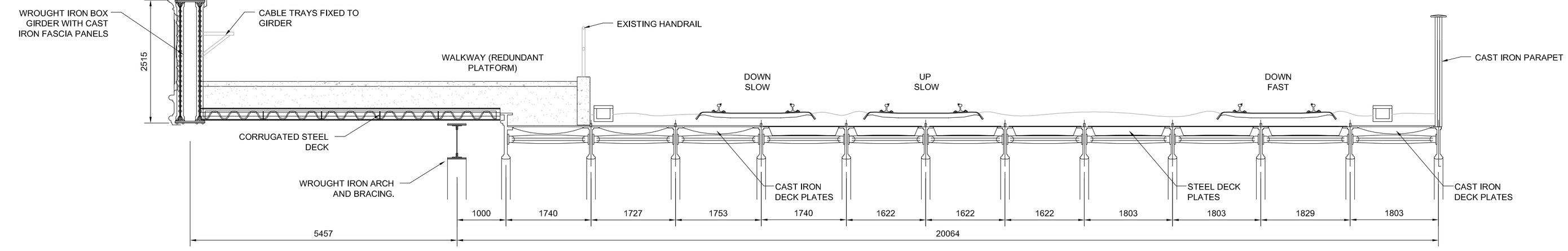

SECTION A-A
1 : 50

NOTES:

1. ALL DIMENSIONS ARE SHOWN IN MILLIMETRES UNLESS NOTED OTHERWISE
2. DRAWINGS PRODUCED FROM RECORD INFORMATION PROVIDED BY NR AND SITE SURVEY DIMENSIONS
3. THESE DRAWINGS ARE INTENDED FOR PLANNING SUBMISSIONS ONLY AND ARE NOT TO BE USED FOR CONSTRUCTION.
4. NO STATS INFORMATION SHOWN ON DRAWINGS. NO EXCAVATIONS NOR ANY WORKS ARE PROPOSED THAT WILL AFFECT STATUTORY UNDERTAKER'S EQUIPMENT. TRACKSIDE SERVICES SURVEY SHALL BE UNDERTAKEN BY THE CONTRACTOR PRIOR TO ANY WORKS COMMENCING.
5. THESE DRAWINGS HAVE BEEN PRODUCED USING RECORD INFORMATION AND ON SITE DIMENSIONS, NO TOPO SURVEY HAS BEEN USED IN THEIR PRODUCTION. TRACK POSITION IS SHOWN INDICATIVELY ONLY.

Rev	Date	Description	Drawn	Check	Approv
01	14/06/16	PLANNING SUBMISSION	M.B	A.D.	A.D.

MURPHY

Network Rail

PROJECT:
GREAT DUCIE ST REFURBISHMENT

Site
MVE1 1A & 1B, DSE 146/130
MANCHESTER VICTORIA

Client
J MURPHY & SONS LTD
WIGAN ROAD
GOLBORNE
WA3 3UB
Phone 01924 725326
Fax 01942 721530
info@murphygroup.co.uk
www.murphygroup.co.uk

ARCADIS Design & Consultancy for natural and built assets

Registered office:
Manning House
22 Carlisle Place
London
SW1P 1JA

Coordinating office:
5th Floor, Faraday Street,
Birchwood Park,
Warrington WA3 6GA
Tel: 44 (0)1925 800700

www.arcadis.com

TITLE:
DSE 146 SPAN 130
EXISTING
GENERAL ARRANGEMENT

Designed	M BARDIN	Signed	Date 14/06/2016
Drawn	M BARDIN	Signed	Date 14/06/2016
Checked	A DAWSON	Signed	Date 14/06/2016
Approved	A DAWSON	Signed	Date 14/06/2016
Scale:	As shown	Datum:	N/A
Original Size:	A1	Grid:	N/A
ELR:	DSE	Mileage:	31m 880yds
Suitability Code:	N/A	Project Number:	UA007926

Suitability Description:
PLANNING
NOT TO BE USED FOR CONSTRUCTION

Drawing Number: 1007-04-UA007926-UT41D
Revision: 01

100mm on Original

Print Date: 2016-06-14 12:27:43

\\HC-UKR-WN-FS-10\WN_Proj\projects\UA007926-DSE & MVE1 Great Ducie Street\E-Our-Drawings\PLANNING DRAWINGS\1001 to 1009-04-UA007926-UT41D-PLANNING DRAWINGS.dwg

© Copyright reserved