Runoff from Greenfield Areas

The runoff rates from the permeable (Greenfield) areas of the site have been calculated using the Institute of Hydrology Report 124 Flood Estimation for Small Catchments (1994). The publication provides the essential design elements for determining the estimated Greenfield runoff rate which is based on the site area, soil type, and average annual rainfall, which is influenced by the location of the site within the United Kingdom. This methodology is recommended within R&D Technical Report W5-074/A/TR/1 'Preliminary Rainfall Runoff Management for Developments'(2012).

The IOH 124 equation to calculate runoff is:

Qbar	=	$0.00108.^{0.89}.SAAR^{1.17}.SOIL^{2.17}$
Where:		
Qbar	=	Mean Annual Flood (m^3/s). A return period in the region of 2.3 years.
SAAR	=	Standard Average Annual Rainfall (mm)
A	=	Area (ha) of the catchment.
SOIL	=	Soil index value obtained from soil maps in the Flood Studies Report or the WRAP map of the Wallingford Procedue.

The SAAR value for the site was extracted from the FEH CD-ROM. The SOIL value was obtained using the Winter Rain Potential Map (WRAP Map). The analysis for determining the peak Greenfield discharge rate uses 50 ha in the formula and linearly interpolates the flow rate value based on the ratio of the development to 50ha (Interim Code of Practice for Sustainable Urban Drainage Systems, 2004).

Runoff from Impermeable Areas

The estimated runoff rate and volume from the existing site has been calculated using the Modified Rational (Wallingford) Method. This method allows estimation of the amount of runoff that is likely to be generated from an urban area. Peak short storm rainfall intensities have been generated for a range of storm returns using WinDes drainage design software by Microdrainage.

The Modified Rational method uses the following equation to calculate peak runoff rate from an area:

Qp	=	2.78 Cv CR i A
Where:		
CV	=	Volumetric Runoff Coefficient
CR	=	1.3 (Routing Coefficient)
i	=	Rainfall Intensity (mm/h)
A	=	Area (ha)
2.78	=	Coefficient which accounts for the differences in units used for the inputs and the outputs of the equation.

The variable Cv is a co-efficient that describes the proportion of rainfall appearing in the surface water drainage system. CR is a routing co-efficient added to the Rational Method to represent runoff characteristics of a particular site or area in a more accurate manner.

Runoff from Greenfield Areas

The runoff rates from the permeable (Greenfield) areas of the site have been calculated using the Institute of Hydrology Report 124 Flood Estimation for Small Catchments (1994).

The IOH 124 equation to calculate runoff is:

Qbar = $0.00108.^{0.89}.SAAR^{1.17}.SOIL^{2.17}$

Where:

Qbar = Mean Annual Flood (m^3/s). A return period in the region of 2.3 years.

SAAR = Standard Average Annual Rainfall (mm)

A = Area (ha) of the catchment.

SOIL = Soil index value obtained from soil maps in the Flood Studies Report or the WRAP map of the Wallingford Procedue.

The table below details the peak Greenfield runoff rates for each indicative phase of the proposed development. Indicative phase boundaries and existing catchment areas are detailed on BDP drawing No. P1_00_(52)_Z0_C_100,

Catchment	Area (ha)	Q_{bar} (l/s)	Q_1 (l/s)	Q_{30} (l/s)	Q_{100} (l/s)	$Q_{100+30\%}$ (l/s)
1	2.13	16.10	14.01	27.37	33.49	43.53

Runoff from Existing Impermeable Areas

The industry-standard Modified Rational Method has been used in the calculation of runoff rates from existing impermeable areas and uses the following equation to calculate the peak rate of runoff from each phase of the development.

Qp	=	2.78 Cv CR i A
Where:		
CV	=	Volumetric Runoff Coefficient
C_R	=	1.3 (Routing Coefficient)
i	=	Rainfall Intensity (mm/h)
A	=	Area (ha)
2.78	=	Coefficient which accounts for the differences in units used for the inputs and the outputs of the equation.

Rainfall intensity data has been obtained from the WinDes design software by Microdrainage, peak rainfall intensities have been generated for a range of storm return periods for a 15 minute duration winter storm. Output from the software is shown below along with a table summarising the average rainfall intensity.

100% AEP Rainfall Event

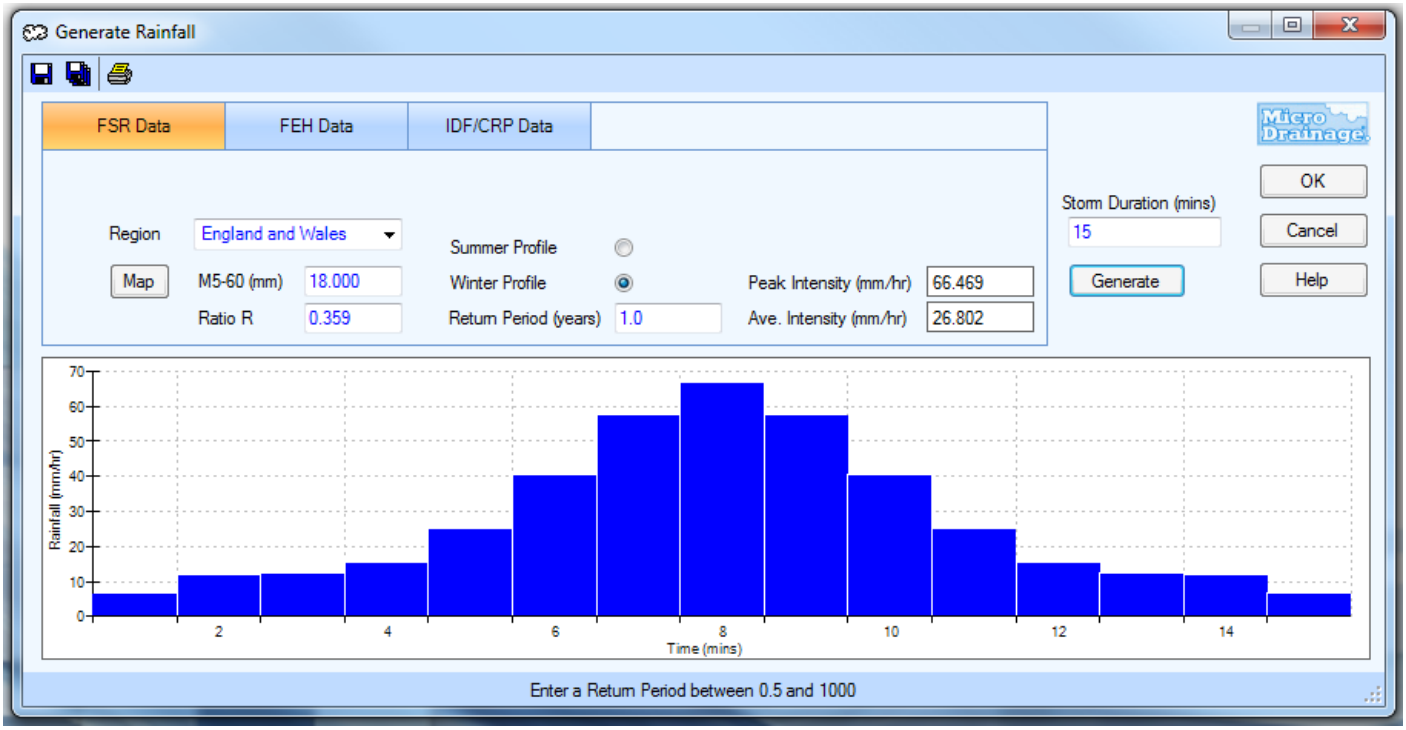

3.33% AEP Rainfall Event

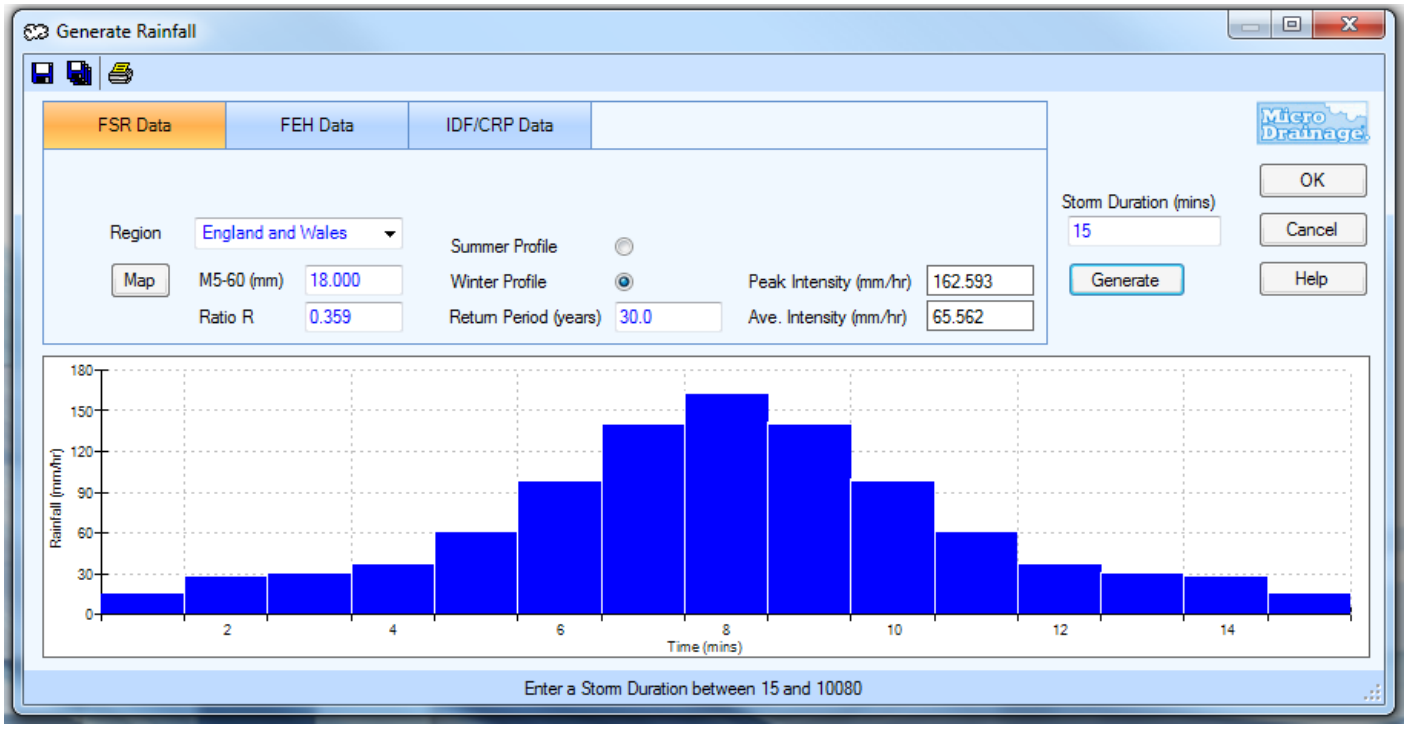

0.1% AEP Rainfall Event

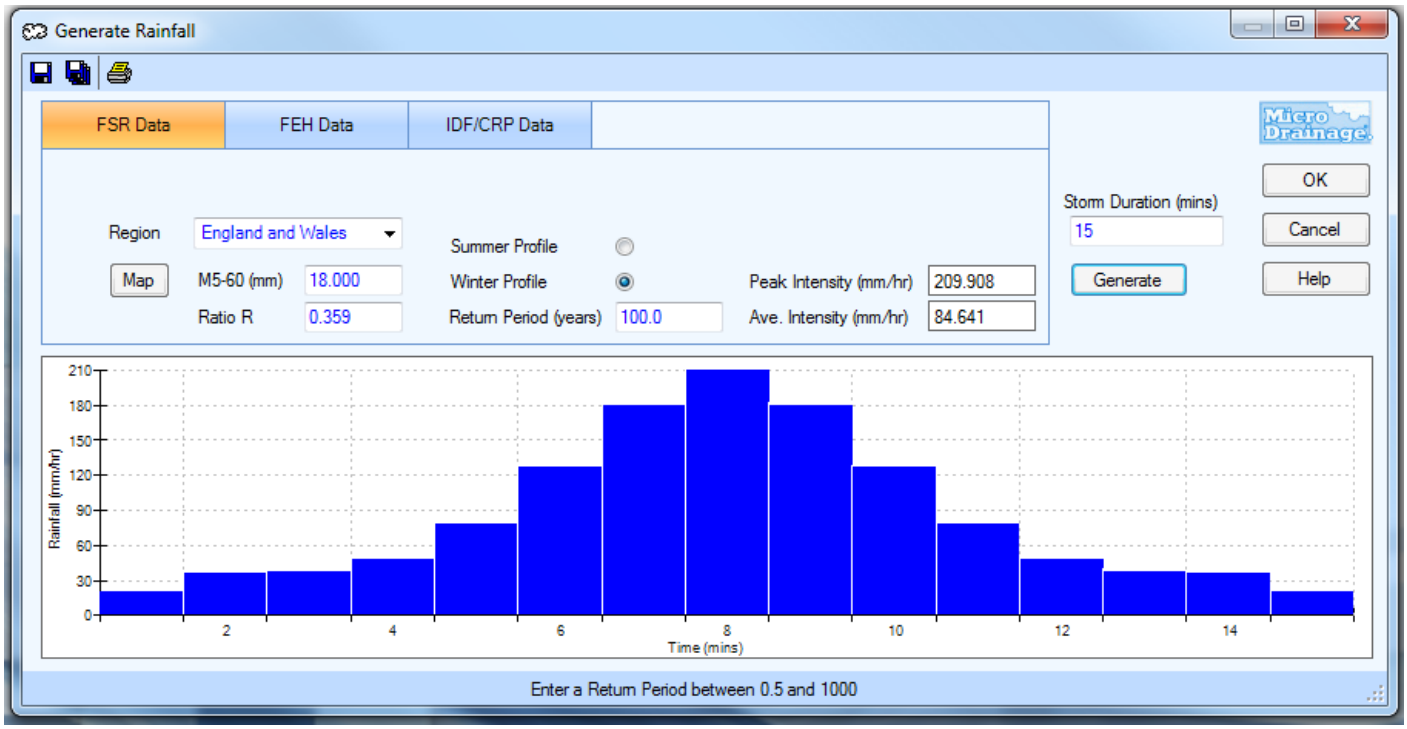

Storm Return Period	Average Rainfall Intensity (i mm/hr) 15min Summer Profile
1 Year	26.80
30 Year	65.56
100 Year	84.64
100 Year +30%	110.03

Based on the drainage information available it is understood that drainage from existing/ historic buildings and areas of hardstanding drains to the existing local private drainage system which in turn discharges to the existing public sewer network surrounding the site.

A standard runoff coefficient of 0.9 was applied to each catchment assessed as impermeable. The variable Cv is a coefficient that describes the proportion of rainfall entering the surface water drainage system. C_R is a routing coefficient added to the Rational Method to represent runoff characteristics of a particular site or area in a more accurate manner.

The table below details the peak brownfield runoff rates entering the existing drainage network for phase 1 of the development. Phase boundaries and existing catchment areas are detailed on BDP drawing No. P1_00_(52)_Z0_C_100

Catchment	Impermeable Area (ha)	Q_1 (l/s)	Q_{30} (l/s)	Q_{100} (l/s)	$Q_{100+30\%}$ (l/s)
1	0.57	49.68	121.54	156.92	203.99

Runoff from Proposed Impermeable Areas

The industry-standard Modified Rational Method has been used in the calculation of runoff rates from proposed impermeable areas and uses the following equation to calculate the peak rate of runoff from each phase of the development.

Qp = 2.78 Cv CR i A

Where:

CV = Volumetric Runoff Coefficient

C_R = 1.3 (Routing Coefficient)

i = Rainfall Intensity (mm/h)

A = Area (ha)

2.78 = Coefficient which accounts for the differences in units used for the inputs and the outputs of the equation.

The table below details the peak brownfield runoff rates generated by phase 1 of the proposed development. Indicative phase boundaries and proposed catchment areas are detailed on BDP drawing No. P00_00_(SK)_Z0_C_002.

Catchment	Impermeable Area (ha)	Q_1 (l/s)	Q_{30} (l/s)	Q_{100} (l/s)	$Q_{100+30\%}$ (l/s)
1	1.92	167.37	409.42	528.58	687.14

Runoff from Existing Greenfield Areas

The table below summarises the existing greenfield runoff rates for each proposed indicative phase of the development for a range of storm return periods.

Refer to Calculation Methodology and IOH 124 Method Calculations for further details.

Catchment	Permeable Area (ha)	Q_{bar} (l/s)	Q_1 (l/s)	Q_{30} (l/s)	Q_{100} (l/s)	$Q_{100+30\%}$ (l/s)
1A	2.13	16.10	14.01	27.37	33.49	43.53

Runoff from Existing Impermeable Areas

The table below summarises the existing brownfield runoff rates phase 1 of the development for a range of storm return periods.

Refer to Calculation Methodology and Modified Rational Method Calculations for further details.

Catchment	Impermeable Area (ha)	Q_1 (l/s)	Q_{30} (l/s)	Q_{100} (l/s)	$Q_{100+30\%}$ (l/s)
1A	0.57	49.68	121.54	156.92	203.99

Proposed Site Runoff Rates

The table below summarises the total proposed site runoff rates which have been calculated by combining the existing Greenfield and brownfield rates of runoff.

Catchment	Gross Area (ha)	Q_1 (l/s)	Q_{30} (l/s)	Q_{100} (l/s)	$Q_{100+30\%}$ (l/s)
1A	2.65	63.69	148.91	190.41	247.52

It is proposed to restrict discharge from the development to the existing total runoff rate for the 30 year return period calculated for each development phase.

In accordance with Policy EN4 of the Core Strategy and the Strategic Flood Risk Assessment, there is a requirement for development proposals to manage surface water runoff to ensure that flood risk is not increased and that a reduction of at least 50% is provided where a development is located within a Critical Drainage Area. As identified within the Flood Risk Assessment, the proposed development is located within the Fallowfield & Levenshulme Critical Drainage Area.

To meet this requirement, a 50% reduction on the calculated discharge rates has been applied. The table below therefore summarises the final proposed restricted discharge rates for the development.

Catchment	Gross Area (ha)	Permissible Discharge (l/s)
1A	2.65	74.45

Summary Wizard of 360 minute 100 year Winter I+40% for XDrainage Proposed CIVIL 3D TOSH branch 1 - Copy.ews

Simulation Criteria

Areal Reduction Factor	1.000	Additional Flow - % of Total Flow	0.000
Hot Start (mins)	0	MADD Factor * 10m³/ha Storage	2.000
Hot Start Level (mm)	0	Inlet Coeffiecient	0.800
Manhole Headloss Coeff (Global)	0.500	Flow per Person per Day (l/per/day)	0.000
Foul Sewage per hectare (l/s)	0.000		

Number of Input Hydrographs	0	Number of Storage Structures	0
Number of Online Controls	1	Number of Time/Area Diagrams	0
Number of Offline Controls	0	Number of Real Time Controls	0

Synthetic Rainfall Details

Rainfall Model	FSR	Ratio R	0.376
Region	England and Wales	Cv (Summer)	0.750
M5-60 (mm)	18.000	Cv (Winter)	0.840

Margin for Flood Risk Warning (mm)	300.0
Analysis Timestep	2.5 Second Increment (Extended)
DTS Status	OFF
DVD Status	ON
Inertia Status	ON

Profile(s)	Winter
Duration(s) (mins)	15, 30, 60, 120, 240, 360, 480, 960, 1440
Return Period(s) (years)	2, 30, 100
Climate Change (%)	0, 0, 40

PN	US/MH Name	Storm Rank	Water Level (m)	Surcharged Depth (m)	Flooded Volume (m³)	Flow / Cap.	Overflow (l/s)	Pipe Flow (l/s)	Status
E1.000	E1	13	44.295	-0.180	0.000	0.09		3.6	OK
E1.001	E2	13	44.075	-0.168	0.000	0.15		5.6	OK
E1.002	E3	13	43.956	-0.159	0.000	0.19		7.2	OK
E2.000	E4	13	44.224	-0.186	0.000	0.07		2.1	OK
E2.001	E5	13	44.193	-0.188	0.000	0.07		2.5	OK
E2.002	E6	13	44.070	-0.193	0.000	0.05		3.5	OK
E1.003	E7	13	43.853	-0.140	0.000	0.31		11.3	OK
E1.004	E8	13	43.764	-0.139	0.000	0.31		11.3	OK
E3.000	E9	13	44.141	-0.184	0.000	0.08		2.9	OK
E3.001	E10	13	44.019	-0.184	0.000	0.08		2.9	OK
E3.002	E11	13	43.903	-0.182	0.000	0.08		2.9	OK
E4.000	E12	13	44.110	-0.215	0.000	0.01		0.7	OK
E3.003	E13	13	43.830	-0.189	0.000	0.06		4.3	OK
E3.004	E14	13	43.716	-0.021	0.000	0.13		4.9	OK
E1.005	E15	13	43.709	-0.114	0.000	0.49		18.2	OK
E1.006	E16	6	42.881	-0.867	0.000	0.00		18.1	OK
E5.000	E17	13	44.092	-0.129	0.000	0.05		2.5	OK
E6.000	E18	13	44.131	-0.119	0.000	0.10		1.2	OK

©1982-2016 XP Solutions

Summary Wizard of 360 minute 100 year Winter I+40% for XDrainage Proposed CIVIL 3D TOSH branch 1 - Copy.ews

PN	US/MH Name	Storm Rank	Water Level (m)	Surcharged Depth (m)	Flooded Volume (m³)	Flow / Cap.	Overflow (l/s)	Pipe Flow (l/s)	Status
E6.001	E19	13	44.091	-0.109	0.000	0.17		2.3	OK
E6.002	E20	13	43.962	-0.103	0.000	0.21		2.7	OK
E6.003	E21	13	43.901	-0.189	0.000	0.06		4.8	OK
E1.007	E22	6	42.879	-0.804	0.000	0.01		22.2	OK
E7.000	E23	13	44.063	-0.189	0.000	0.06		2.5	OK
E7.001	E24	13	43.846	-0.188	0.000	0.06		2.5	OK
E8.000	E25	13	44.070	-0.193	0.000	0.05		1.9	OK
E8.001	E26	13	43.857	-0.180	0.000	0.09		3.4	OK
E8.002	E27	13	43.753	-0.173	0.000	0.12		4.3	OK
E7.002	E28	13	43.692	-0.171	0.000	0.13		8.8	OK
E1.008	E29	6	42.876	-0.740	0.000	0.01		26.5	OK
E9.000	E30	13	44.240	-0.110	0.000	0.16		2.0	OK
E9.001	E31	13	44.203	-0.097	0.000	0.27		3.5	OK
E9.002	E32	13	44.058	-0.179	0.000	0.09		3.5	OK
E9.003	E33	13	43.945	-0.174	0.000	0.12		3.5	OK
E9.004	E34	13	43.923	-0.162	0.000	0.18		5.2	OK
E9.005	E35	13	43.883	-0.169	0.000	0.14		5.2	OK
E9.006	E36	13	43.751	-0.193	0.000	0.05		5.2	OK
E1.009	E37	6	42.874	-0.727	0.000	0.01		31.3	OK
E10.000	E38	13	44.020	-0.130	0.000	0.04		2.2	OK
E1.010	E39	6	42.866	-0.689	0.000	0.01		33.5	OK
E11.000	E40	13	44.135	-0.190	0.000	0.06		2.3	OK
E11.001	E41	13	44.018	-0.180	0.000	0.09		2.7	OK
E11.002	E42	13	43.985	-0.179	0.000	0.09		3.6	OK
E11.003	E43	13	43.857	-0.168	0.000	0.15		4.4	OK
E12.000	E44	13	44.021	-0.129	0.000	0.05		1.1	OK
E11.004	E45	13	43.820	-0.162	0.000	0.18		6.2	OK
E11.005	E46	13	43.765	-0.152	0.000	0.23		6.8	OK
E11.006	E47	13	43.735	-0.155	0.000	0.21		6.9	OK
E13.000	E48	13	44.022	-0.128	0.000	0.05		0.7	OK
E13.001	E49	13	43.923	-0.127	0.000	0.06		0.7	OK
E13.002	E50	13	43.866	-0.117	0.000	0.11		1.9	OK
E11.007	E51	13	43.656	-0.180	0.000	0.09		8.9	OK
E1.011	E52	6	42.865	-0.681	0.000	0.01		37.8	OK
E14.000	E53	13	44.113	-0.212	0.000	0.01		0.4	OK
E14.001	E54	13	44.053	-0.174	0.000	0.12		4.3	OK
E14.002	E55	13	43.954	-0.176	0.000	0.11		5.3	OK
E15.000	E56	13	44.270	-0.130	0.000	0.04		0.9	OK
E15.001	E57	13	44.152	-0.109	0.000	0.17		3.1	OK
E14.003	E58	13	43.858	-0.151	0.000	0.24		9.0	OK
E16.000	E59	13	44.697	-0.128	0.000	0.05		0.8	OK
E16.001	E60	13	44.576	-0.104	0.000	0.21		3.5	OK
E17.000	E61	13	44.767	-0.133	0.000	0.03		1.0	OK
E16.002	E62	13	44.398	-0.102	0.000	0.22		6.5	OK
E14.004	E63	13	43.781	-0.108	0.000	0.54		16.8	OK
E1.012	E64	7	42.839	-0.596	0.000	0.01		55.2	OK
E18.000	E65	13	43.530	-0.120	0.000	0.09		1.2	OK

©1982-2016 XP Solutions

Summary Wizard of 360 minute 100 year Winter I+40% for XDrainage Proposed CIVIL 3D TOSH branch 1 - Copy.ews

PN	US/MH Name	Storm Rank	Water Level (m)	Surcharged Depth (m)	Flooded Volume (m³)	Flow / Cap.	Overflow (l/s)	Pipe Flow (l/s)	Status
E19.000	E66	13	43.471	-0.129	0.000	0.05		0.7	OK
E18.001	E67	13	43.414	-0.100	0.000	0.24		3.2	OK
E18.002	E68	13	43.173	-0.234	0.000	0.07		3.2	OK
E20.000	E69	13	43.778	-0.122	0.000	0.08		2.1	OK
E18.003	E70	13	43.168	-0.224	0.000	0.14		6.7	OK
E21.000	E71	13	43.433	-0.192	0.000	0.05		1.7	OK
E21.001	E72	13	43.345	-0.188	0.000	0.07		3.2	OK
E18.004	E73	13	43.122	-0.247	0.000	0.13		11.8	OK
E22.000	E74	13	43.611	-0.135	0.000	0.02		0.6	OK
E23.000	E75	13	43.356	-0.199	0.000	0.03		1.0	OK
E23.001	E76	13	43.319	-0.189	0.000	0.06		2.5	OK
E24.000	E77	13	43.866	-0.068	0.000	0.58		7.4	OK
E24.001	E78	13	43.577	-0.297	0.000	0.10		7.4	OK
E24.002	E79	13	43.545	-0.309	0.000	0.07		7.6	OK
E24.003	E80	13	43.477	-0.307	0.000	0.08		8.1	OK
E24.004	E81	13	43.375	-0.323	0.000	0.05		10.6	OK
E18.005	E82	13	43.100	-0.209	0.000	0.41		27.3	OK
E18.006	E83	7	42.839	0.180	0.000	0.12		28.0	SURCHARGED
E25.000	E84	13	44.230	-0.115	0.000	0.12		1.6	OK
E26.000	E85	13	44.749	-0.101	0.000	0.24		3.1	OK
E26.001	E86	13	44.683	-0.102	0.000	0.22		3.1	OK
E18.007	E87	7	42.835	0.144	0.000	0.12		34.1	SURCHARGED
E1.013	E88	7	42.830	0.210	0.000	0.64		71.6	SURCHARGED
E1.014	E89	7	42.816	0.226	0.000	0.42		73.1	SURCHARGED

©1982-2016 XP Solutions

2 year Return Period Summary of Critical Results by Maximum Level (Rank 1) for XDrainage Proposed CIVIL 3D TOSH branch 1 - Copy.ews

Simulation Criteria

Areal Reduction Factor	1.000	Additional Flow - % of Total Flow	0.000
Hot Start (mins)	0	MADD Factor * 10m³/ha Storage	2.000
Hot Start Level (mm)	0	Inlet Coeffiecient	0.800
Manhole Headloss Coeff (Global)	0.500	Flow per Person per Day (l/per/day)	0.000
Foul Sewage per hectare (l/s)	0.000		

Number of Input Hydrographs	0	Number of Storage Structures	0
Number of Online Controls	1	Number of Time/Area Diagrams	0
Number of Offline Controls	0	Number of Real Time Controls	0

Synthetic Rainfall Details

Rainfall Model	FSR	Ratio R	0.376
Region	England and Wales	Cv (Summer)	0.750
M5-60 (mm)	18.000	Cv (Winter)	0.840

Margin for Flood Risk Warning (mm)	300.0
Analysis Timestep	2.5 Second Increment (Extended)
DTS Status	OFF
DVD Status	ON
Inertia Status	ON

Profile(s)	Winter
Duration(s) (mins)	15, 30, 60, 120, 240, 360, 480, 960, 1440
Return Period(s) (years)	2, 30, 100
Climate Change (%)	0, 0, 40

PN	US/MH Name	Storm	Return Period	Climate Change	First (X) Surcharge	First (Y) Flood	First (Z) Overflow	Overflow Act.	Water Level (m)
E1.000	E1	15 Winter	2	+0%	100/15 Winter				44.314
E1.001	E2	15 Winter	2	+0%	100/15 Winter				44.098
E1.002	E3	15 Winter	2	+0%	30/15 Winter				43.980
E2.000	E4	15 Winter	2	+0%	100/15 Winter				44.241
E2.001	E5	15 Winter	2	+0%	100/15 Winter				44.209
E2.002	E6	15 Winter	2	+0%	100/15 Winter				44.083
E1.003	E7	15 Winter	2	+0%	30/15 Winter				43.887
E1.004	E8	15 Winter	2	+0%	30/15 Winter				43.799
E3.000	E9	15 Winter	2	+0%	100/15 Winter				44.158
E3.001	E10	15 Winter	2	+0%	100/15 Winter				44.036
E3.002	E11	15 Winter	2	+0%	100/15 Winter				43.920
E4.000	E12	15 Winter	2	+0%	100/15 Winter				44.120
E3.003	E13	15 Winter	2	+0%	100/15 Winter				43.845
E3.004	E14	15 Winter	2	+0%	2/15 Winter				43.774
E1.005	E15	15 Winter	2	+0%	30/15 Winter				43.760
E1.006	E16	30 Winter	2	+0%					42.619
E5.000	E17	15 Winter	2	+0%					44.102
E6.000	E18	15 Winter	2	+0%	100/15 Winter				44.145

©1982-2016 XP Solutions

2 year Return Period Summary of Critical Results by Maximum Level (Rank 1) for XDrainage Proposed CIVIL 3D TOSH branch 1 - Copy.ews

PN	US/MH Name	Surcharged Depth (m)	Flooded Volume (m³)	Flow / Cap.	Overflow (l/s)	Pipe Flow (l/s)	Status	Level Exceeded
E1.000	E1	-0.161	0.000	0.17		7.0	OK	
E1.001	E2	-0.145	0.000	0.27		10.3	OK	
E1.002	E3	-0.135	0.000	0.33		12.7	OK	
E2.000	E4	-0.169	0.000	0.14		4.1	OK	
E2.001	E5	-0.172	0.000	0.12		4.7	OK	
E2.002	E6	-0.180	0.000	0.09		6.5	OK	
E1.003	E7	-0.106	0.000	0.54		20.0	OK	
E1.004	E8	-0.104	0.000	0.55		20.1	OK	
E3.000	E9	-0.167	0.000	0.15		5.6	OK	
E3.001	E10	-0.167	0.000	0.15		5.6	OK	
E3.002	E11	-0.165	0.000	0.16		5.7	OK	
E4.000	E12	-0.205	0.000	0.02		1.4	OK	
E3.003	E13	-0.174	0.000	0.12		8.1	OK	
E3.004	E14	0.037	0.000	0.23		8.9	SURCHARGED	
E1.005	E15	-0.063	0.000	0.86		32.1	OK	
E1.006	E16	-1.129	0.000	0.01		26.6	OK	
E5.000	E17	-0.119	0.000	0.09		4.9	OK	
E6.000	E18	-0.105	0.000	0.19		2.4	OK	

©1982-2016 XP Solutions

2 year Return Period Summary of Critical Results by Maximum Level (Rank 1) for XDrainage Proposed CIVIL 3D TOSH branch 1 - Copy.ews

PN	US/MH Name	Storm	Return Period	Climate Change	First (X) Surcharge	First (Y) Flood	First (Z) Overflow	Overflow Act.	Water Level (m)
E6.001	E19	15 Winter	2	+0%	100/15 Winter				44.108
E6.002	E20	15 Winter	2	+0%	100/15 Winter				43.979
E6.003	E21	15 Winter	2	+0%					43.914
E1.007	E22	30 Winter	2	+0%					42.614
E7.000	E23	15 Winter	2	+0%					44.080
E7.001	E24	15 Winter	2	+0%					43.861
E8.000	E25	15 Winter	2	+0%					44.085
E8.001	E26	15 Winter	2	+0%					43.873
E8.002	E27	15 Winter	2	+0%					43.772
E7.002	E28	15 Winter	2	+0%					43.711
E1.008	E29	30 Winter	2	+0%					42.613
E9.000	E30	15 Winter	2	+0%	100/15 Winter				44.258
E9.001	E31	15 Winter	2	+0%	100/15 Winter				44.226
E9.002	E32	15 Winter	2	+0%	100/15 Winter				44.074
E9.003	E33	15 Winter	2	+0%	100/15 Winter				43.964
E9.004	E34	15 Winter	2	+0%	100/15 Winter				43.946
E9.005	E35	15 Winter	2	+0%					43.903
E9.006	E36	15 Winter	2	+0%					43.764
E1.009	E37	30 Winter	2	+0%					42.613
E10.000	E38	15 Winter	2	+0%					44.029
E1.010	E39	30 Winter	2	+0%					42.612
E11.000	E40	15 Winter	2	+0%					44.151
E11.001	E41	15 Winter	2	+0%	100/15 Winter				44.036
E11.002	E42	15 Winter	2	+0%	100/15 Winter				44.002
E11.003	E43	15 Winter	2	+0%	100/15 Winter				43.879
E12.000	E44	15 Winter	2	+0%					44.031
E11.004	E45	15 Winter	2	+0%	100/15 Winter				43.844
E11.005	E46	15 Winter	2	+0%	100/15 Winter				43.792
E11.006	E47	15 Winter	2	+0%	100/15 Winter				43.760
E13.000	E48	15 Winter	2	+0%					44.033
E13.001	E49	15 Winter	2	+0%					43.933
E13.002	E50	15 Winter	2	+0%					43.878
E11.007	E51	15 Winter	2	+0%					43.671
E1.011	E52	30 Winter	2	+0%					42.611
E14.000	E53	15 Winter	2	+0%	100/15 Winter				44.124
E14.001	E54	15 Winter	2	+0%	100/15 Winter				44.070
E14.002	E55	15 Winter	2	+0%	30/15 Winter				43.970
E15.000	E56	15 Winter	2	+0%	100/15 Winter				44.280
E15.001	E57	15 Winter	2	+0%	100/15 Winter				44.166
E14.003	E58	15 Winter	2	+0%	30/15 Winter				43.884
E16.000	E59	15 Winter	2	+0%	100/15 Winter				44.707
E16.001	E60	15 Winter	2	+0%	100/15 Winter				44.593
E17.000	E61	15 Winter	2	+0%	100/15 Winter				44.774
E16.002	E62	15 Winter	2	+0%	100/15 Winter				44.415
E14.004	E63	15 Winter	2	+0%	30/15 Winter				43.833
E1.012	E64	30 Winter	2	+0%					42.600
E18.000	E65	15 Winter	2	+0%	100/15 Winter				43.542

©1982-2016 XP Solutions

2 year Return Period Summary of Critical Results by Maximum Level (Rank 1) for XDrainage Proposed CIVIL 3D TOSH branch 1 - Copy.ews

PN	US/MH Name	Surcharged Depth (m)	Flooded Volume (m³)	Flow / Cap.	Overflow (l/s)	Pipe Flow (l/s)	Status	Level Exceeded
E6.001	E19	-0.092	0.000	0.31		4.2	OK	
E6.002	E20	-0.086	0.000	0.38		4.8	OK	
E6.003	E21	-0.176	0.000	0.11		8.3	OK	
E1.007	E22	-1.069	0.000	0.01		37.3	OK	
E7.000	E23	-0.172	0.000	0.12		4.8	OK	
E7.001	E24	-0.173	0.000	0.12		4.8	OK	
E8.000	E25	-0.178	0.000	0.09		3.7	OK	
E8.001	E26	-0.164	0.000	0.16		6.1	OK	
E8.002	E27	-0.154	0.000	0.22		7.7	OK	
E7.002	E28	-0.152	0.000	0.23		15.6	OK	
E1.008	E29	-1.003	0.000	0.02		46.2	OK	
E9.000	E30	-0.092	0.000	0.32		3.9	OK	
E9.001	E31	-0.074	0.000	0.49		6.3	OK	
E9.002	E32	-0.163	0.000	0.17		6.4	OK	
E9.003	E33	-0.155	0.000	0.21		6.4	OK	
E9.004	E34	-0.139	0.000	0.31		9.3	OK	
E9.005	E35	-0.149	0.000	0.24		9.2	OK	
E9.006	E36	-0.180	0.000	0.09		9.2	OK	
E1.009	E37	-0.988	0.000	0.02		54.0	OK	
E10.000	E38	-0.121	0.000	0.08		4.3	OK	
E1.010	E39	-0.943	0.000	0.02		50.1	OK	
E11.000	E40	-0.174	0.000	0.11		4.4	OK	
E11.001	E41	-0.162	0.000	0.17		5.1	OK	
E11.002	E42	-0.162	0.000	0.17		6.7	OK	
E11.003	E43	-0.146	0.000	0.27		8.0	OK	
E12.000	E44	-0.119	0.000	0.10		2.2	OK	
E11.004	E45	-0.138	0.000	0.32		11.2	OK	
E11.005	E46	-0.125	0.000	0.41		12.1	OK	
E11.006	E47	-0.130	0.000	0.37		12.2	OK	
E13.000	E48	-0.117	0.000	0.11		1.4	OK	
E13.001	E49	-0.117	0.000	0.11		1.4	OK	
E13.002	E50	-0.105	0.000	0.19		3.4	OK	
E11.007	E51	-0.165	0.000	0.16		15.5	OK	
E1.011	E52	-0.935	0.000	0.01		63.5	OK	
E14.000	E53	-0.201	0.000	0.02		0.8	OK	
E14.001	E54	-0.157	0.000	0.19		7.2	OK	
E14.002	E55	-0.160	0.000	0.18		9.0	OK	
E15.000	E56	-0.120	0.000	0.09		1.7	OK	
E15.001	E57	-0.095	0.000	0.29		5.3	OK	
E14.003	E58	-0.125	0.000	0.40		15.4	OK	
E16.000	E59	-0.118	0.000	0.10		1.6	OK	
E16.001	E60	-0.087	0.000	0.36		6.0	OK	
E17.000	E61	-0.126	0.000	0.06		2.1	OK	
E16.002	E62	-0.085	0.000	0.39		11.3	OK	
E14.004	E63	-0.056	0.000	0.91		28.5	OK	
E1.012	E64	-0.835	0.000	0.01		48.1	OK	

©1982-2016 XP Solutions

2 year Return Period Summary of Critical Results by Maximum Level (Rank 1) for XDrainage Proposed CIVIL 3D TOSH branch 1 - Copy.ews

PN	US/MH Name	Surcharged Depth (m)	Flooded Volume (m^3)	Flow / Cap.	Overflow (l/s)	Pipe Flow (l/s)	Status	Level Exceeded
E18.000	E65	-0.108	0.000	0.17		2.3	OK	

©1982-2016 XP Solutions

2 year Return Period Summary of Critical Results by Maximum Level (Rank 1) for XDrainage Proposed CIVIL 3D TOSH branch 1 - Copy.ews

PN	US/MH Name	Storm	Return Period	Climate Change	First (X) Surcharge	First (Y) Flood	First (Z) Overflow	Overflow Act.	Water Level (m)
E19.000	E66	15 Winter	2	+0%	100/15 Winter				43.481
E18.001	E67	15 Winter	2	+0%	100/15 Winter				43.434
E18.002	E68	15 Winter	2	+0%	100/15 Winter				43.204
E20.000	E69	15 Winter	2	+0%					43.789
E18.003	E70	15 Winter	2	+0%	30/15 Winter				43.199
E21.000	E71	15 Winter	2	+0%					43.448
E21.001	E72	15 Winter	2	+0%	100/15 Winter				43.360
E18.004	E73	15 Winter	2	+0%	30/15 Winter				43.182
E22.000	E74	15 Winter	2	+0%					43.616
E23.000	E75	15 Winter	2	+0%					43.366
E23.001	E76	15 Winter	2	+0%					43.333
E24.000	E77	15 Winter	2	+0%	2/15 Winter				43.949
E24.001	E78	15 Winter	2	+0%					43.609
E24.002	E79	15 Winter	2	+0%					43.573
E24.003	E80	15 Winter	2	+0%					43.504
E24.004	E81	15 Winter	2	+0%					43.397
E18.005	E82	15 Winter	2	+0%	100/15 Winter				43.164
E18.006	E83	30 Winter	2	+0%	2/30 Winter				42.674
E25.000	E84	15 Winter	2	+0%					44.245
E26.000	E85	15 Winter	2	+0%	100/15 Winter				44.773
E26.001	E86	15 Winter	2	+0%	100/15 Winter				44.705
E18.007	E87	30 Winter	2	+0%	30/15 Winter				42.670
E1.013	E88	30 Winter	2	+0%	30/15 Winter				42.594
E1.014	E89	30 Winter	2	+0%	30/15 Winter				42.556

PN	US/MH Name	Surcharged Depth (m)	Flooded Volume (m³)	Flow / Cap.	Overflow (l/s)	Pipe Flow (l/s)	Status	Level Exceeded
E19.000	E66	-0.119	0.000	0.09		1.4	OK	
E18.001	E67	-0.080	0.000	0.44		5.9	OK	
E18.002	E68	-0.203	0.000	0.12		5.9	OK	
E20.000	E69	-0.111	0.000	0.15		4.1	OK	
E18.003	E70	-0.193	0.000	0.26		12.1	OK	
E21.000	E71	-0.177	0.000	0.10		3.3	OK	
E21.001	E72	-0.173	0.000	0.12		5.8	OK	
E18.004	E73	-0.187	0.000	0.23		20.2	OK	
E22.000	E74	-0.130	0.000	0.04		1.3	OK	
E23.000	E75	-0.189	0.000	0.06		1.9	OK	
E23.001	E76	-0.175	0.000	0.11		4.4	OK	
E24.000	E77	0.015	0.000	1.13		14.5	SURCHARGED	
E24.001	E78	-0.265	0.000	0.19		14.5	OK	
E24.002	E79	-0.281	0.000	0.14		14.4	OK	
E24.003	E80	-0.280	0.000	0.14		15.4	OK	
E24.004	E81	-0.301	0.000	0.09		19.1	OK	
E18.005	E82	-0.145	0.000	0.68		45.7	OK	

©1982-2016 XP Solutions

2 year Return Period Summary of Critical Results by Maximum Level (Rank 1) for XDrainage Proposed CIVIL 3D TOSH branch 1 - Copy.ews

PN	US/MH Name	Surcharged Depth (m)	Flooded Volume (m³)	Flow / Cap.	Overflow (l/s)	Pipe Flow (l/s)	Status	Level Exceeded
E18.006	E83	0.015	0.000	0.17		39.7	SURCHARGED	
E25.000	E84	-0.100	0.000	0.24		3.2	OK	
E26.000	E85	-0.077	0.000	0.47		6.0	OK	
E26.001	E86	-0.080	0.000	0.44		6.0	OK	
E18.007	E87	-0.021	0.000	0.15		40.7	OK	
E1.013	E88	-0.026	0.000	0.59		66.0	OK	
E1.014	E89	-0.034	0.000	0.39		67.6	OK	

©1982-2016 XP Solutions

30 year Return Period Summary of Critical Results by Maximum Level (Rank 1) for XDrainage Proposed CIVIL 3D TOSH branch 1 - Copy.ews

Simulation Criteria

Areal Reduction Factor	1.000	Additional Flow - % of Total Flow	0.000
Hot Start (mins)	0	MADD Factor * 10m³/ha Storage	2.000
Hot Start Level (mm)	0	Inlet Coeffiecient	0.800
Manhole Headloss Coeff (Global)	0.500	Flow per Person per Day (l/per/day)	0.000
Foul Sewage per hectare (l/s)	0.000		

Number of Input Hydrographs	0	Number of Storage Structures	0
Number of Online Controls	1	Number of Time/Area Diagrams	0
Number of Offline Controls	0	Number of Real Time Controls	0

Synthetic Rainfall Details

Rainfall Model	FSR	Ratio R	0.376
Region	England and Wales	Cv (Summer)	0.750
M5-60 (mm)	18.000	Cv (Winter)	0.840

Margin for Flood Risk Warning (mm)	300.0
Analysis Timestep	2.5 Second Increment (Extended)
DTS Status	OFF
DVD Status	ON
Inertia Status	ON

Profile(s)	Winter
Duration(s) (mins)	15, 30, 60, 120, 240, 360, 480, 960, 1440
Return Period(s) (years)	2, 30, 100
Climate Change (%)	0, 0, 40

PN	US/MH Name	Storm	Return Period	Climate Change	First (X) Surcharge	First (Y) Flood	First (Z) Overflow	Overflow Act.	Water Level (m)
E1.000	E1	15 Winter	30	+0%	100/15 Winter				44.340
E1.001	E2	15 Winter	30	+0%	100/15 Winter				44.227
E1.002	E3	15 Winter	30	+0%	30/15 Winter				44.190
E2.000	E4	15 Winter	30	+0%	100/15 Winter				44.263
E2.001	E5	15 Winter	30	+0%	100/15 Winter				44.232
E2.002	E6	15 Winter	30	+0%	100/15 Winter				44.129
E1.003	E7	15 Winter	30	+0%	30/15 Winter				44.123
E1.004	E8	15 Winter	30	+0%	30/15 Winter				44.032
E3.000	E9	15 Winter	30	+0%	100/15 Winter				44.182
E3.001	E10	15 Winter	30	+0%	100/15 Winter				44.060
E3.002	E11	15 Winter	30	+0%	100/15 Winter				43.995
E4.000	E12	15 Winter	30	+0%	100/15 Winter				44.127
E3.003	E13	15 Winter	30	+0%	100/15 Winter				43.984
E3.004	E14	15 Winter	30	+0%	2/15 Winter				43.965
E1.005	E15	15 Winter	30	+0%	30/15 Winter				43.942
E1.006	E16	30 Winter	30	+0%					42.874
E5.000	E17	15 Winter	30	+0%					44.113
E6.000	E18	15 Winter	30	+0%	100/15 Winter				44.163

©1982-2016 XP Solutions

30 year Return Period Summary of Critical Results by Maximum Level (Rank 1) for XDrainage Proposed CIVIL 3D TOSH branch 1 - Copy.ews

PN	US/MH Name	Surcharged Depth (m)	Flooded Volume (m³)	Flow / Cap.	Overflow (l/s)	Pipe Flow (l/s)	Status	Level Exceeded
E1.000	E1	-0.135	0.000	0.33		13.2	OK	
E1.001	E2	-0.016	0.000	0.47		17.9	OK	
E1.002	E3	0.075	0.000	0.59		22.3	SURCHARGED	
E2.000	E4	-0.147	0.000	0.26		7.8	OK	
E2.001	E5	-0.149	0.000	0.24		9.2	OK	
E2.002	E6	-0.134	0.000	0.17		12.8	OK	
E1.003	E7	0.130	0.000	0.94		34.7	SURCHARGED	
E1.004	E8	0.129	0.000	0.96		34.7	SURCHARGED	
E3.000	E9	-0.143	0.000	0.28		10.6	OK	
E3.001	E10	-0.143	0.000	0.28		10.7	OK	
E3.002	E11	-0.090	0.000	0.28		10.0	OK	
E4.000	E12	-0.198	0.000	0.03		2.7	OK	
E3.003	E13	-0.035	0.000	0.21		14.5	OK	
E3.004	E14	0.228	0.000	0.42		16.0	SURCHARGED	
E1.005	E15	0.119	0.000	1.48		55.3	SURCHARGED	
E1.006	E16	-0.874	0.000	0.01		47.2	OK	
E5.000	E17	-0.108	0.000	0.17		9.3	OK	
E6.000	E18	-0.087	0.000	0.36		4.5	OK	

©1982-2016 XP Solutions

30 year Return Period Summary of Critical Results by Maximum Level (Rank 1) for XDrainage Proposed CIVIL 3D TOSH branch 1 - Copy.ews

PN	US/MH Name	Storm	Return Period	Climate Change	First (X) Surcharge	First (Y) Flood	First (Z) Overflow	Overflow Act.	Water Level (m)
E6.001	E19	15 Winter	30	+0%	100/15 Winter				44.139
E6.002	E20	15 Winter	30	+0%	100/15 Winter				44.019
E6.003	E21	15 Winter	30	+0%					43.940
E1.007	E22	30 Winter	30	+0%					42.873
E7.000	E23	15 Winter	30	+0%					44.101
E7.001	E24	15 Winter	30	+0%					43.883
E8.000	E25	15 Winter	30	+0%					44.102
E8.001	E26	15 Winter	30	+0%					43.903
E8.002	E27	15 Winter	30	+0%					43.809
E7.002	E28	15 Winter	30	+0%					43.749
E1.008	E29	30 Winter	30	+0%					42.870
E9.000	E30	15 Winter	30	+0%	100/15 Winter				44.307
E9.001	E31	15 Winter	30	+0%	100/15 Winter				44.286
E9.002	E32	15 Winter	30	+0%	100/15 Winter				44.102
E9.003	E33	15 Winter	30	+0%	100/15 Winter				44.006
E9.004	E34	15 Winter	30	+0%	100/15 Winter				43.994
E9.005	E35	15 Winter	30	+0%					43.942
E9.006	E36	15 Winter	30	+0%					43.785
E1.009	E37	30 Winter	30	+0%					42.869
E10.000	E38	15 Winter	30	+0%					44.040
E1.010	E39	30 Winter	30	+0%					42.863
E11.000	E40	15 Winter	30	+0%					44.171
E11.001	E41	15 Winter	30	+0%	100/15 Winter				44.063
E11.002	E42	15 Winter	30	+0%	100/15 Winter				44.032
E11.003	E43	15 Winter	30	+0%	100/15 Winter				43.920
E12.000	E44	15 Winter	30	+0%					44.043
E11.004	E45	15 Winter	30	+0%	100/15 Winter				43.891
E11.005	E46	15 Winter	30	+0%	100/15 Winter				43.854
E11.006	E47	15 Winter	30	+0%	100/15 Winter				43.815
E13.000	E48	15 Winter	30	+0%					44.046
E13.001	E49	15 Winter	30	+0%					43.947
E13.002	E50	15 Winter	30	+0%					43.901
E11.007	E51	15 Winter	30	+0%					43.700
E1.011	E52	30 Winter	30	+0%					42.862
E14.000	E53	15 Winter	30	+0%	100/15 Winter				44.176
E14.001	E54	15 Winter	30	+0%	100/15 Winter				44.173
E14.002	E55	15 Winter	30	+0%	30/15 Winter				44.146
E15.000	E56	15 Winter	30	+0%	100/15 Winter				44.291
E15.001	E57	15 Winter	30	+0%	100/15 Winter				44.222
E14.003	E58	15 Winter	30	+0%	30/15 Winter				44.126
E16.000	E59	15 Winter	30	+0%	100/15 Winter				44.720
E16.001	E60	15 Winter	30	+0%	100/15 Winter				44.633
E17.000	E61	15 Winter	30	+0%	100/15 Winter				44.784
E16.002	E62	15 Winter	30	+0%	100/15 Winter				44.469
E14.004	E63	15 Winter	30	+0%	30/15 Winter				44.031
E1.012	E64	30 Winter	30	+0%					42.845
E18.000	E65	15 Winter	30	+0%	100/15 Winter				43.560

©1982-2016 XP Solutions

30 year Return Period Summary of Critical Results by Maximum Level (Rank 1) for XDrainage Proposed CIVIL 3D TOSH branch 1 - Copy.ews

PN	US/MH Name	Surcharged Depth (m)	Flooded Volume (m³)	Flow / Cap.	Overflow (l/s)	Pipe Flow (l/s)	Status	Level Exceeded
E6.001	E19	-0.061	0.000	0.64		8.8	OK	
E6.002	E20	-0.046	0.000	0.80		10.0	OK	
E6.003	E21	-0.150	0.000	0.24		18.3	OK	
E1.007	E22	-0.810	0.000	0.01		52.8	OK	
E7.000	E23	-0.151	0.000	0.23		9.1	OK	
E7.001	E24	-0.151	0.000	0.23		9.1	OK	
E8.000	E25	-0.161	0.000	0.18		7.0	OK	
E8.001	E26	-0.134	0.000	0.33		12.4	OK	
E8.002	E27	-0.117	0.000	0.45		16.0	OK	
E7.002	E28	-0.114	0.000	0.48		32.2	OK	
E1.008	E29	-0.746	0.000	0.02		58.4	OK	
E9.000	E30	-0.043	0.000	0.60		7.4	OK	
E9.001	E31	-0.014	0.000	1.00		12.8	OK	
E9.002	E32	-0.135	0.000	0.34		12.8	OK	
E9.003	E33	-0.113	0.000	0.43		12.9	OK	
E9.004	E34	-0.091	0.000	0.64		19.2	OK	
E9.005	E35	-0.110	0.000	0.51		19.3	OK	
E9.006	E36	-0.159	0.000	0.19		19.4	OK	
E1.009	E37	-0.732	0.000	0.02		69.9	OK	
E10.000	E38	-0.110	0.000	0.16		8.1	OK	
E1.010	E39	-0.692	0.000	0.02		59.7	OK	
E11.000	E40	-0.154	0.000	0.22		8.3	OK	
E11.001	E41	-0.135	0.000	0.33		9.8	OK	
E11.002	E42	-0.132	0.000	0.35		13.3	OK	
E11.003	E43	-0.105	0.000	0.55		16.4	OK	
E12.000	E44	-0.107	0.000	0.18		4.2	OK	
E11.004	E45	-0.091	0.000	0.65		22.9	OK	
E11.005	E46	-0.063	0.000	0.86		25.0	OK	
E11.006	E47	-0.075	0.000	0.78		25.5	OK	
E13.000	E48	-0.104	0.000	0.20		2.7	OK	
E13.001	E49	-0.103	0.000	0.21		2.7	OK	
E13.002	E50	-0.082	0.000	0.42		7.4	OK	
E11.007	E51	-0.136	0.000	0.33		32.5	OK	
E1.011	E52	-0.684	0.000	0.02		79.7	OK	
E14.000	E53	-0.149	0.000	0.04		1.4	OK	
E14.001	E54	-0.054	0.000	0.40		14.7	OK	
E14.002	E55	0.016	0.000	0.38		18.7	SURCHARGED	
E15.000	E56	-0.109	0.000	0.16		3.3	OK	
E15.001	E57	-0.039	0.000	0.63		11.6	OK	
E14.003	E58	0.117	0.000	0.82		31.2	SURCHARGED	
E16.000	E59	-0.105	0.000	0.19		3.0	OK	
E16.001	E60	-0.047	0.000	0.80		13.3	OK	
E17.000	E61	-0.116	0.000	0.12		3.9	OK	
E16.002	E62	-0.031	0.000	0.85		24.6	OK	
E14.004	E63	0.142	0.000	1.90		59.1	SURCHARGED	
E1.012	E64	-0.590	0.000	0.01		63.8	OK	

©1982-2016 XP Solutions

30 year Return Period Summary of Critical Results by Maximum Level (Rank 1) for XDrainage Proposed CIVIL 3D TOSH branch 1 - Copy.ews

PN	US/MH Name	Surcharged Depth (m)	Flooded Volume (m^3)	Flow / Cap.	Overflow (l/s)	Pipe Flow (l/s)	Status	Level Exceeded
E18.000	E65	-0.090	0.000	0.32		4.4	OK	

©1982-2016 XP Solutions

30 year Return Period Summary of Critical Results by Maximum Level (Rank 1) for XDrainage Proposed CIVIL 3D TOSH branch 1 - Copy.ews

PN	US/MH Name	Storm	Return Period	Climate Change	First (X) Surcharge	First (Y) Flood	First (Z) Overflow	Overflow Act.	Water Level (m)
E19.000	E66	15 Winter	30	+0%	100/15 Winter				43.498
E18.001	E67	15 Winter	30	+0%	100/15 Winter				43.481
E18.002	E68	15 Winter	30	+0%	100/15 Winter				43.407
E20.000	E69	15 Winter	30	+0%					43.805
E18.003	E70	15 Winter	30	+0%	30/15 Winter				43.403
E21.000	E71	15 Winter	30	+0%					43.467
E21.001	E72	15 Winter	30	+0%	100/15 Winter				43.409
E18.004	E73	15 Winter	30	+0%	30/15 Winter				43.388
E22.000	E74	15 Winter	30	+0%					43.625
E23.000	E75	15 Winter	30	+0%					43.381
E23.001	E76	15 Winter	30	+0%					43.358
E24.000	E77	15 Winter	30	+0%	2/15 Winter				44.145
E24.001	E78	15 Winter	30	+0%					43.653
E24.002	E79	15 Winter	30	+0%					43.610
E24.003	E80	15 Winter	30	+0%					43.542
E24.004	E81	15 Winter	30	+0%					43.426
E18.005	E82	15 Winter	30	+0%	100/15 Winter				43.309
E18.006	E83	30 Winter	30	+0%	2/30 Winter				42.852
E25.000	E84	15 Winter	30	+0%					44.267
E26.000	E85	15 Winter	30	+0%	100/15 Winter				44.811
E26.001	E86	15 Winter	30	+0%	100/15 Winter				44.740
E18.007	E87	30 Winter	30	+0%	30/15 Winter				42.845
E1.013	E88	30 Winter	30	+0%	30/15 Winter				42.837
E1.014	E89	30 Winter	30	+0%	30/15 Winter				42.818

PN	US/MH Name	Surcharged Depth (m)	Flooded Volume (m³)	Flow / Cap.	Overflow (l/s)	Pipe Flow (l/s)	Status	Level Exceeded
E19.000	E66	-0.102	0.000	0.18		2.7	OK	
E18.001	E67	-0.033	0.000	0.87		11.7	OK	
E18.002	E68	0.000	0.000	0.23		10.9	OK	
E20.000	E69	-0.095	0.000	0.29		7.8	OK	
E18.003	E70	0.011	0.000	0.46		21.5	SURCHARGED	
E21.000	E71	-0.158	0.000	0.19		6.2	OK	
E21.001	E72	-0.124	0.000	0.24		12.1	OK	
E18.004	E73	0.019	0.000	0.43		37.4	SURCHARGED	
E22.000	E74	-0.121	0.000	0.08		2.4	OK	
E23.000	E75	-0.174	0.000	0.12		3.6	OK	
E23.001	E76	-0.150	0.000	0.24		9.5	OK	
E24.000	E77	0.211	0.000	2.12		27.1	SURCHARGED	
E24.001	E78	-0.221	0.000	0.35		27.1	OK	
E24.002	E79	-0.244	0.000	0.26		27.2	OK	
E24.003	E80	-0.242	0.000	0.27		29.0	OK	
E24.004	E81	-0.272	0.000	0.16		35.9	OK	
E18.005	E82	0.000	0.000	1.31		87.7	OK	

©1982-2016 XP Solutions

30 year Return Period Summary of Critical Results by Maximum Level (Rank 1) for XDrainage Proposed CIVIL 3D TOSH branch 1 - Copy.ews

PN	US/MH Name	Surcharged Depth (m)	Flooded Volume (m³)	Flow / Cap.	Overflow (l/s)	Pipe Flow (l/s)	Status	Level Exceeded
E18.006	E83	0.193	0.000	0.30		68.7	SURCHARGED	
E25.000	E84	-0.078	0.000	0.46		6.0	OK	
E26.000	E85	-0.039	0.000	0.88		11.3	OK	
E26.001	E86	-0.045	0.000	0.83		11.4	OK	
E18.007	E87	0.154	0.000	0.31		85.8	SURCHARGED	
E1.013	E88	0.217	0.000	0.64		72.5	SURCHARGED	
E1.014	E89	0.228	0.000	0.42		73.1	SURCHARGED	

©1982-2016 XP Solutions

100 year Return Period Summary of Critical Results by Maximum Level (Rank 1) for XDrainage Proposed CIVIL 3D TOSH branch 1 - Copy.ews

Simulation Criteria

Areal Reduction Factor	1.000	Additional Flow - % of Total Flow	0.000
Hot Start (mins)	0	MADD Factor * 10m³/ha Storage	2.000
Hot Start Level (mm)	0	Inlet Coeffiecient	0.800
Manhole Headloss Coeff (Global)	0.500	Flow per Person per Day (l/per/day)	0.000
Foul Sewage per hectare (l/s)	0.000		

Number of Input Hydrographs	0	Number of Storage Structures	0
Number of Online Controls	1	Number of Time/Area Diagrams	0
Number of Offline Controls	0	Number of Real Time Controls	0

Synthetic Rainfall Details

Rainfall Model	FSR	Ratio R	0.376
Region	England and Wales	Cv (Summer)	0.750
M5-60 (mm)	18.000	Cv (Winter)	0.840

Margin for Flood Risk Warning (mm)	300.0
Analysis Timestep	2.5 Second Increment (Extended)
DTS Status	OFF
DVD Status	ON
Inertia Status	ON

Profile(s)	Winter
Duration(s) (mins)	15, 30, 60, 120, 240, 360, 480, 960, 1440
Return Period(s) (years)	2, 30, 100
Climate Change (%)	0, 0, 40

PN	US/MH Name	Storm	Return Period	Climate Change	First (X) Surcharge	First (Y) Flood	First (Z) Overflow	Overflow Act.	Water Level (m)
E1.000	E1	15 Winter	100	+40%	100/15 Winter				45.020
E1.001	E2	15 Winter	100	+40%	100/15 Winter				44.966
E1.002	E3	15 Winter	100	+40%	30/15 Winter				44.879
E2.000	E4	15 Winter	100	+40%	100/15 Winter				44.803
E2.001	E5	15 Winter	100	+40%	100/15 Winter				44.795
E2.002	E6	15 Winter	100	+40%	100/15 Winter				44.770
E1.003	E7	15 Winter	100	+40%	30/15 Winter				44.759
E1.004	E8	15 Winter	100	+40%	30/15 Winter				44.533
E3.000	E9	15 Winter	100	+40%	100/15 Winter				44.528
E3.001	E10	15 Winter	100	+40%	100/15 Winter				44.496
E3.002	E11	15 Winter	100	+40%	100/15 Winter				44.466
E4.000	E12	15 Winter	100	+40%	100/15 Winter				44.450
E3.003	E13	15 Winter	100	+40%	100/15 Winter				44.447
E3.004	E14	15 Winter	100	+40%	2/15 Winter				44.414
E1.005	E15	15 Winter	100	+40%	30/15 Winter				44.331
E1.006	E16	60 Winter	100	+40%					43.355
E5.000	E17	15 Winter	100	+40%					44.129
E6.000	E18	15 Winter	100	+40%	100/15 Winter				44.304

©1982-2016 XP Solutions

100 year Return Period Summary of Critical Results by Maximum Level (Rank 1) for XDrainage Proposed CIVIL 3D TOSH branch 1 - Copy.ews

PN	US/MH Name	Surcharged Depth (m)	Flooded Volume (m³)	Flow / Cap.	Overflow (l/s)	Pipe Flow (l/s)	Status	Level Exceeded
E1.000	E1	0.545	0.000	0.49		19.6	FLOOD RISK	
E1.001	E2	0.723	0.000	0.76		29.2	FLOOD RISK	
E1.002	E3	0.764	0.000	0.96		36.6	FLOOD RISK	
E2.000	E4	0.393	0.000	0.40		12.0	FLOOD RISK	
E2.001	E5	0.414	0.000	0.35		13.3	FLOOD RISK	
E2.002	E6	0.507	0.000	0.25		18.2	FLOOD RISK	
E1.003	E7	0.766	0.000	1.56		57.6	FLOOD RISK	
E1.004	E8	0.630	0.000	1.59		57.5	SURCHARGED	
E3.000	E9	0.203	0.000	0.45		17.3	SURCHARGED	
E3.001	E10	0.293	0.000	0.41		15.5	SURCHARGED	
E3.002	E11	0.381	0.000	0.44		15.7	SURCHARGED	
E4.000	E12	0.125	0.000	0.06		4.4	SURCHARGED	
E3.003	E13	0.428	0.000	0.32		22.4	SURCHARGED	
E3.004	E14	0.677	0.000	0.66		25.1	SURCHARGED	
E1.005	E15	0.508	0.000	2.44		90.9	SURCHARGED	
E1.006	E16	-0.393	0.000	0.01		60.5	OK	
E5.000	E17	-0.092	0.000	0.31		16.8	OK	
E6.000	E18	0.054	0.000	0.64		8.0	SURCHARGED	

©1982-2016 XP Solutions

100 year Return Period Summary of Critical Results by Maximum Level (Rank 1) for XDrainage Proposed CIVIL 3D TOSH branch 1 - Copy.ews

PN	US/MH Name	Storm	Return Period	Climate Change	First (X) Surcharge	First (Y) Flood	First (Z) Overflow	Overflow Act.	Water Level (m)
E6.001	E19	15 Winter	100	+40%	100/15 Winter				44.281
E6.002	E20	15 Winter	100	+40%	100/15 Winter				44.103
E6.003	E21	15 Winter	100	+40%					43.966
E1.007	E22	60 Winter	100	+40%					43.352
E7.000	E23	15 Winter	100	+40%					44.129
E7.001	E24	15 Winter	100	+40%					43.911
E8.000	E25	15 Winter	100	+40%					44.127
E8.001	E26	15 Winter	100	+40%					43.940
E8.002	E27	15 Winter	100	+40%					43.859
E7.002	E28	15 Winter	100	+40%					43.802
E1.008	E29	60 Winter	100	+40%					43.345
E9.000	E30	15 Winter	100	+40%	100/15 Winter				44.513
E9.001	E31	15 Winter	100	+40%	100/15 Winter				44.452
E9.002	E32	15 Winter	100	+40%	100/15 Winter				44.247
E9.003	E33	15 Winter	100	+40%	100/15 Winter				44.177
E9.004	E34	15 Winter	100	+40%	100/15 Winter				44.121
E9.005	E35	15 Winter	100	+40%					43.990
E9.006	E36	15 Winter	100	+40%					43.804
E1.009	E37	60 Winter	100	+40%					43.342
E10.000	E38	15 Winter	100	+40%					44.054
E1.010	E39	60 Winter	100	+40%					43.326
E11.000	E40	15 Winter	100	+40%					44.266
E11.001	E41	15 Winter	100	+40%	100/15 Winter				44.237
E11.002	E42	15 Winter	100	+40%	100/15 Winter				44.225
E11.003	E43	15 Winter	100	+40%	100/15 Winter				44.156
E12.000	E44	15 Winter	100	+40%					44.104
E11.004	E45	15 Winter	100	+40%	100/15 Winter				44.085
E11.005	E46	15 Winter	100	+40%	100/15 Winter				43.998
E11.006	E47	15 Winter	100	+40%	100/15 Winter				43.913
E13.000	E48	15 Winter	100	+40%					44.063
E13.001	E49	15 Winter	100	+40%					43.964
E13.002	E50	15 Winter	100	+40%					43.932
E11.007	E51	15 Winter	100	+40%					43.729
E1.011	E52	60 Winter	100	+40%					43.323
E14.000	E53	15 Winter	100	+40%	100/15 Winter				44.808
E14.001	E54	15 Winter	100	+40%	100/15 Winter				44.803
E14.002	E55	15 Winter	100	+40%	30/15 Winter				44.720
E15.000	E56	15 Winter	100	+40%	100/15 Winter				44.882
E15.001	E57	15 Winter	100	+40%	100/15 Winter				44.865
E14.003	E58	15 Winter	100	+40%	30/15 Winter				44.605
E16.000	E59	15 Winter	100	+40%	100/15 Winter				45.310
E16.001	E60	15 Winter	100	+40%	100/15 Winter				45.291
E17.000	E61	15 Winter	100	+40%	100/15 Winter				45.148
E16.002	E62	15 Winter	100	+40%	100/15 Winter				45.130
E14.004	E63	15 Winter	100	+40%	30/15 Winter				44.357
E1.012	E64	60 Winter	100	+40%					43.280
E18.000	E65	15 Winter	100	+40%	100/15 Winter				43.844

©1982-2016 XP Solutions

100 year Return Period Summary of Critical Results by Maximum Level (Rank 1) for XDrainage Proposed CIVIL 3D TOSH branch 1 - Copy.ews

PN	US/MH Name	Surcharged Depth (m)	Flooded Volume (m³)	Flow / Cap.	Overflow (l/s)	Pipe Flow (l/s)	Status	Level Exceeded
E6.001	E19	0.081	0.000	1.12		15.2	SURCHARGED	
E6.002	E20	0.038	0.000	1.37		17.1	SURCHARGED	
E6.003	E21	-0.124	0.000	0.40		31.2	OK	
E1.007	E22	-0.331	0.000	0.01		41.7	OK	
E7.000	E23	-0.123	0.000	0.41		16.4	OK	
E7.001	E24	-0.123	0.000	0.42		16.4	OK	
E8.000	E25	-0.136	0.000	0.32		12.7	OK	
E8.001	E26	-0.097	0.000	0.60		22.4	OK	
E8.002	E27	-0.067	0.000	0.82		29.0	OK	
E7.002	E28	-0.061	0.000	0.87		58.0	OK	
E1.008	E29	-0.271	0.000	0.02		47.9	OK	
E9.000	E30	0.163	0.000	1.09		13.5	SURCHARGED	
E9.001	E31	0.152	0.000	1.81		23.2	SURCHARGED	
E9.002	E32	0.010	0.000	0.58		22.1	SURCHARGED	
E9.003	E33	0.058	0.000	0.75		22.5	SURCHARGED	
E9.004	E34	0.036	0.000	1.04		31.0	SURCHARGED	
E9.005	E35	-0.062	0.000	0.84		31.6	OK	
E9.006	E36	-0.140	0.000	0.31		31.7	OK	
E1.009	E37	-0.259	0.000	0.01		52.8	OK	
E10.000	E38	-0.096	0.000	0.28		14.6	OK	
E1.010	E39	-0.229	0.000	0.02		67.5	OK	
E11.000	E40	-0.059	0.000	0.38		14.6	OK	
E11.001	E41	0.039	0.000	0.57		16.9	SURCHARGED	
E11.002	E42	0.061	0.000	0.57		21.9	SURCHARGED	
E11.003	E43	0.131	0.000	0.87		26.1	SURCHARGED	
E12.000	E44	-0.046	0.000	0.32		7.3	OK	
E11.004	E45	0.103	0.000	1.03		36.2	SURCHARGED	
E11.005	E46	0.081	0.000	1.35		39.5	SURCHARGED	
E11.006	E47	0.023	0.000	1.24		40.6	SURCHARGED	
E13.000	E48	-0.087	0.000	0.36		4.8	OK	
E13.001	E49	-0.086	0.000	0.37		4.8	OK	
E13.002	E50	-0.051	0.000	0.75		13.3	OK	
E11.007	E51	-0.107	0.000	0.53		51.8	OK	
E1.011	E52	-0.223	0.000	0.01		66.1	OK	
E14.000	E53	0.483	0.000	0.09		3.1	SURCHARGED	
E14.001	E54	0.576	0.000	0.70		25.8	SURCHARGED	
E14.002	E55	0.590	0.000	0.66		32.2	SURCHARGED	
E15.000	E56	0.482	0.000	0.29		5.8	SURCHARGED	
E15.001	E57	0.604	0.000	1.01		18.6	SURCHARGED	
E14.003	E58	0.596	0.000	1.43		54.2	SURCHARGED	
E16.000	E59	0.485	0.000	0.29		4.4	FLOOD RISK	
E16.001	E60	0.611	0.000	1.14		18.9	FLOOD RISK	
E17.000	E61	0.248	0.000	0.18		6.2	SURCHARGED	
E16.002	E62	0.630	0.000	1.11		32.4	SURCHARGED	
E14.004	E63	0.468	0.000	2.97		92.5	SURCHARGED	
E1.012	E64	-0.155	0.000	0.02		90.7	OK	

©1982-2016 XP Solutions

100 year Return Period Summary of Critical Results by Maximum Level (Rank 1) for XDrainage Proposed CIVIL 3D TOSH branch 1 - Copy.ews

PN	US/MH Name	Surcharged Depth (m)	Flooded Volume (m³)	Flow / Cap.	Overflow (l/s)	Pipe Flow (l/s)	Status	Level Exceeded
E18.000	E65	0.194	0.000	0.55		7.4	FLOOD RISK	

©1982-2016 XP Solutions

100 year Return Period Summary of Critical Results by Maximum Level (Rank 1) for XDrainage Proposed CIVIL 3D TOSH branch 1 - Copy.ews

PN	US/MH Name	Storm	Return Period	Climate Change	First (X) Surcharge	First (Y) Flood	First (Z) Overflow	Overflow Act.	Water Level (m)
E19.000	E66	15 Winter	100	+40%	100/15 Winter				43.820
E18.001	E67	15 Winter	100	+40%	100/15 Winter				43.805
E18.002	E68	15 Winter	100	+40%	100/15 Winter				43.583
E20.000	E69	15 Winter	100	+40%					43.828
E18.003	E70	15 Winter	100	+40%	30/15 Winter				43.576
E21.000	E71	15 Winter	100	+40%					43.567
E21.001	E72	15 Winter	100	+40%	100/15 Winter				43.546
E18.004	E73	15 Winter	100	+40%	30/15 Winter				43.512
E22.000	E74	15 Winter	100	+40%					43.635
E23.000	E75	15 Winter	100	+40%					43.480
E23.001	E76	15 Winter	100	+40%					43.474
E24.000	E77	15 Winter	100	+40%	2/15 Winter				44.696
E24.001	E78	15 Winter	100	+40%					43.712
E24.002	E79	15 Winter	100	+40%					43.659
E24.003	E80	15 Winter	100	+40%					43.591
E24.004	E81	15 Winter	100	+40%					43.487
E18.005	E82	15 Winter	100	+40%	100/15 Winter				43.436
E18.006	E83	60 Winter	100	+40%	2/30 Winter				43.267
E25.000	E84	15 Winter	100	+40%					44.301
E26.000	E85	15 Winter	100	+40%	100/15 Winter				45.094
E26.001	E86	15 Winter	100	+40%	100/15 Winter				44.943
E18.007	E87	60 Winter	100	+40%	30/15 Winter				43.261
E1.013	E88	60 Winter	100	+40%	30/15 Winter				43.253
E1.014	E89	60 Winter	100	+40%	30/15 Winter				43.232

PN	US/MH Name	Surcharged Depth (m)	Flooded Volume (m³)	Flow / Cap.	Overflow (l/s)	Pipe Flow (l/s)	Status	Level Exceeded
E19.000	E66	0.220	0.000	0.30		4.5	FLOOD RISK	
E18.001	E67	0.291	0.000	1.42		19.1	SURCHARGED	
E18.002	E68	0.176	0.000	0.40		19.1	SURCHARGED	
E20.000	E69	-0.072	0.000	0.53		14.1	OK	
E18.003	E70	0.184	0.000	0.87		40.2	SURCHARGED	
E21.000	E71	-0.058	0.000	0.32		10.5	OK	
E21.001	E72	0.013	0.000	0.39		19.1	SURCHARGED	
E18.004	E73	0.143	0.000	0.79		69.0	SURCHARGED	
E22.000	E74	-0.111	0.000	0.15		4.3	OK	
E23.000	E75	-0.075	0.000	0.20		6.1	OK	
E23.001	E76	-0.034	0.000	0.39		15.5	OK	
E24.000	E77	0.762	0.000	3.69		47.0	FLOOD RISK	
E24.001	E78	-0.162	0.000	0.61		46.6	OK	
E24.002	E79	-0.195	0.000	0.46		47.8	OK	
E24.003	E80	-0.193	0.000	0.47		50.3	OK	
E24.004	E81	-0.211	0.000	0.28		63.2	OK	
E18.005	E82	0.127	0.000	2.39		159.6	SURCHARGED	

©1982-2016 XP Solutions

100 year Return Period Summary of Critical Results by Maximum Level (Rank 1) for XDrainage Proposed CIVIL 3D TOSH branch 1 - Copy.ews

PN	US/MH Name	Surcharged Depth (m)	Flooded Volume (m^3)	Flow / Cap.	Overflow (l/s)	Pipe Flow (l/s)	Status	Level Exceeded
E18.006	E83	0.608	0.000	0.44		99.0	SURCHARGED	
E25.000	E84	-0.044	0.000	0.84		10.8	OK	
E26.000	E85	0.244	0.000	1.52		19.5	SURCHARGED	
E26.001	E86	0.158	0.000	1.41		19.4	SURCHARGED	
E18.007	E87	0.570	0.000	0.44		120.7	SURCHARGED	
E1.013	E88	0.633	0.000	0.67		75.3	SURCHARGED	
E1.014	E89	0.642	0.000	0.43		73.8	SURCHARGED	

©1982-2016 XP Solutions

Proposed Catchment Areas				
Phase	Building (m^2)	Hardstanding (m^2)	Soft Landscaping (m^2)	Total (m^2)
1	9022	8236	9292	26550

Existing car park area outside of boundary to be drained into Phase 1A drainage network. Additional catchment area therefore included in table figures above.

Key

- Planning Boundary
- Phase 1 Boundary
  1.73ha Impermeable
  0.93ha Permeable
- Proposed Soft Landscaping Area
- Proposed Hardstanding Area
- Proposed Building Area

BUILDING DESIGN PARTNERSHIP SHALL HAVE NO RESPONSIBILITY FOR ANY USE MADE OF THIS DOCUMENT OTHER THAN FOR THAT WHICH IT WAS PREPARED AND ISSUED.

ALL DIMENSIONS SHOULD BE CHECKED ON SITE.

DO NOT SCALE FROM THIS DRAWING.

ANY DRAWING ERRORS OR DIVERGENCES SHOULD BE BROUGHT TO THE ATTENTION OF BUILDING DESIGN PARTNERSHIP AT THE ADDRESS SHOWN BELOW.

NOTES

REVISION	DESCRIPTION	DRAWN	CHECKED	DATE
FIRST ISSUE		CS	JP	20/09/16

KEY PLAN

CLIENT

MANCHESTER 1824
The University of Manchester

BDP.

11 Ducie Street
P.O. Box 85, Piccadilly Basin
Manchester M60 3JA
United Kingdom
T +44 (0)161 828 2200
F +44 (0)161 828 2235
www.bdp.com

PROJECT TITLE
Owens Park, Fallowfield Campus Redevelopment

PROJECT NUMBER
P2006665

DRAWING TITLE
Flood Risk Assessment & Drainage Strategy
Proposed Catchment Areas

SCALE @A1
1:1000

DATE
Mar '15

DRAWING No.
P00_00_(SK)_Z0_C_002

REVISION
-

SEE INSET

CUT LINE - SEE INSET



BDP SHALL HAVE NO RESPONSIBILITY FOR ANY USE MADE OF THIS DOCUMENT OTHER THAN FOR THAT WHICH IT WAS PREPARED AND ISSUED.
ALL DIMENSIONS SHOULD BE CHECKED ON SITE.
DO NOT SCALE FROM THIS DRAWING.
ANY DRAWING ERRORS OR DISCREPANCIES SHOULD BE BROUGHT TO THE ATTENTION OF BUILDING DESIGN PARTNERSHIP AT THE ADDRESS SHOWN BELOW

NOTES

1. All dimensions are in metres unless stated otherwise.
2. This drawing should be read in conjunction with all other relevant architectural and engineering details, drawings and specifications.
3. Any discrepancies should be reported to the architect and/or engineer immediately so that clarification can be sought prior to the commencement of work.

KEY

- Planning Boundary
- Phase 1 Site Boundary
- Existing Combined Drain & Manhole
- Existing Foul Drain & Manhole
- Existing Surface Water Drain & Manhole
- Existing Surface Water Gully
- Existing Public Combined Sewer & Manhole
- Existing Public surface Water Sewer & Manhole
- Existing Land Drainage
- Existing Soft Landscaping Area
- Existing Hardstanding Area

Existing Catchment Areas				
Phase	Building (m²)	Hardstanding (m²)	Soft Landscaping (m²)	Total (m²)
1	0	5640	20910	26550

First Issue	CS	JP	20/08/15
REVISION DESCRIPTION	DRAWN	AUTHORISED	DATE

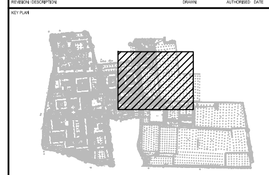

MANCHESTER 1824
The University of Manchester

BDP.

11 Ducie Street
P.O. Box 85, Piccadilly Basin
Manchester M60 3JA
United Kingdom
T +44 (0)161 828 2200
F +44 (0)161 828 2235
www.bdp.com

Project title: Owens Park, Fallowfield Campus Redevelopment	
Project no.: P2006665	
Drawing title: Phase 1A Existing Drainage & Catchment Areas	Scale @ A0: 1:250
	Date: Aug '15
Drawing no.: P1_00_(52)_Z0_C_100	Revision: -

Technical Specification		
Control Point	Head (m)	Flow (l/s)
Primary Design	3.000	74.366
Flush-Flo™	0.869	73.929
Kick-Flo®	1.866	59.113
Mean Flow		64.297

Hydro-Brake Optimum® Flow Control including:

- **8 mm** grade 304L stainless steel
- Integral stainless steel pivoting bypass door allowing clear line of sight through to outlet, c/w stainless steel operating rope
- Bead blasted finish to maximise corrosion resistance
- Stainless steel fixings
- Neoprene gasket to seal outlet

BBA APPROVAL INSPECTION TESTING CERTIFICATION
CERTIFICATE No 08/4596

WRc APPROVED
PT/329/0412

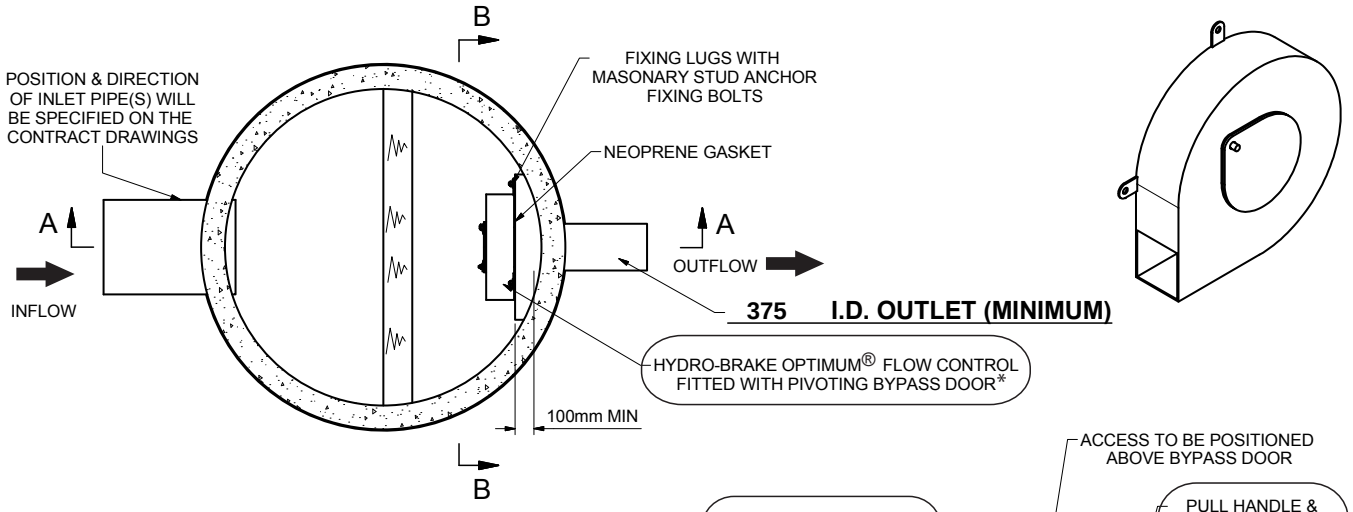

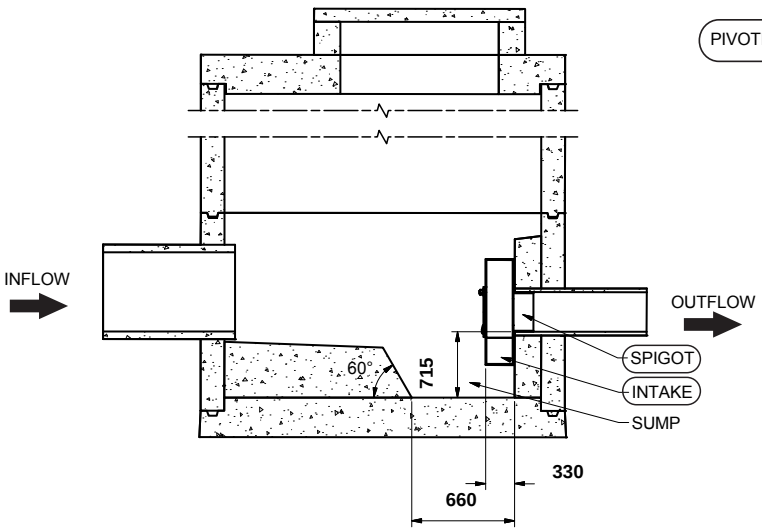

SECTION A-A

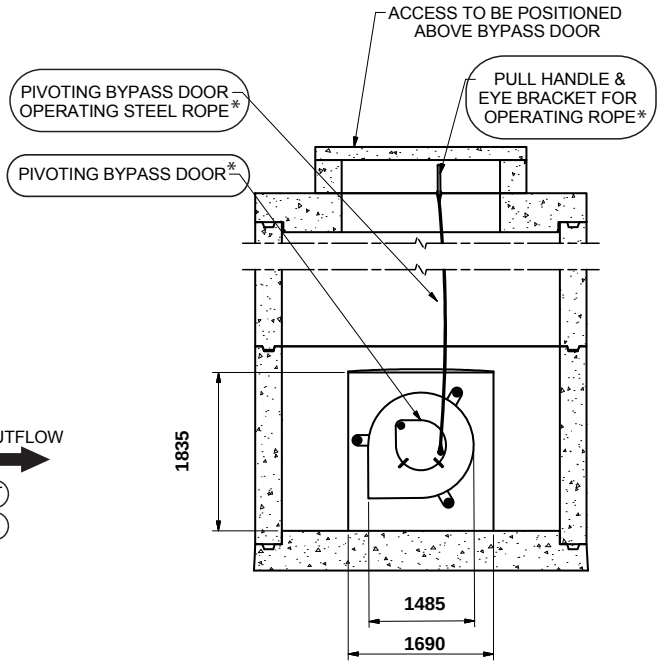

SECTION B-B

IMPORTANT: (LIMIT OF HYDRO INTERNATIONAL SUPPLY)
THE DEVICE WILL BE HANDED TO SUIT SITE CONDITIONS
FOR SITE SPECIFIC DETAILS AND MINIMUM CHAMBER SIZE REFER TO HYDRO INTERNATIONAL
ALL CIVIL AND INSTALLATION WORK BY OTHERS
* WHERE SUPPLIED
HYDRO-BRAKE® FLOW CONTROL & HYDRO-BRAKE OPTIMUM® FLOW CONTROL ARE REGISTERED TRADEMARKS FOR FLOW CONTROLS DESIGNED AND MANUFACTURED EXCLUSIVELY BY HYDRO INTERNATIONAL

THIS DESIGN LAYOUT IS FOR ILLUSTRATIVE PURPOSES ONLY. NOT TO SCALE.

DESIGN ADVICE !

The head/flow characteristics of this SHE-0321-7445-3000-7445 Hydro-Brake Optimum® Flow Control are unique. Dynamic hydraulic modelling evaluates the full head/flow characteristic curve.

The use of any other flow control will invalidate any design based on this data and could constitute a flood risk.

Hydro International

DATE	21/07/2017 14:10:14
SITE	Fallowfield
DESIGNER	Callum Simister
REF	S89 Hydrobrake

SHE-0321-7445-3000-7445

Hydro-Brake Optimum®

© 2017
Hydro International, Shearwater House, Clevedon Hall Estate, Victoria Road, Clevedon, BS21 7RD. Tel 01275 878371 Fax 01275 874979 Web www.hydro-int.com Email enquiries@hydro-int.com

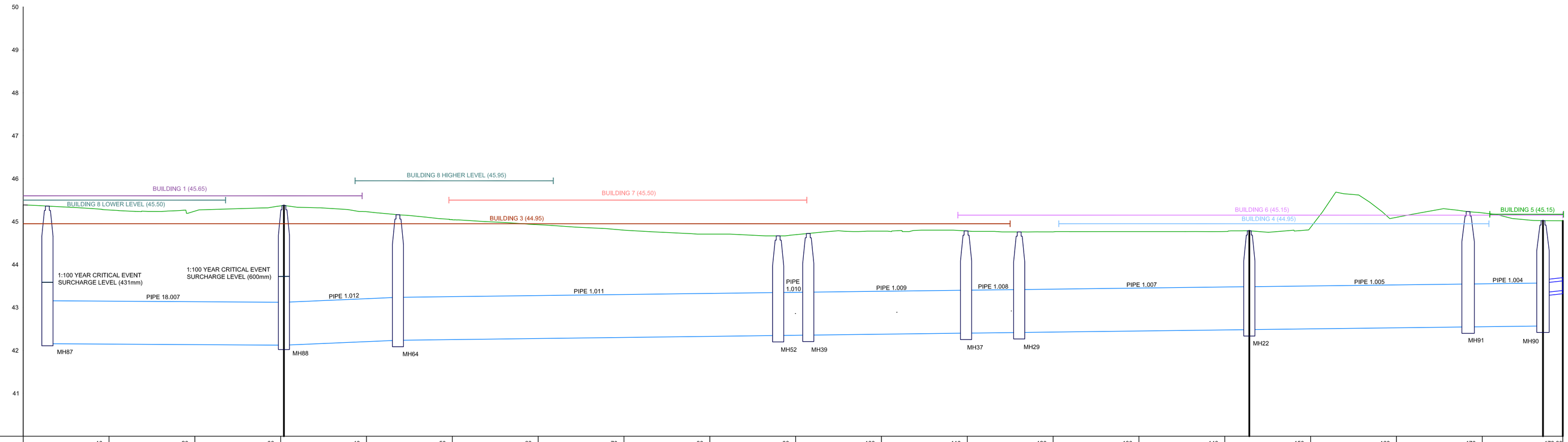

CHAINAGE	10	20	30	40	50	60	70	80	90	100	110	120	130	140	150	160	170	179.38
PROPOSED SURFACE LEVEL	45.271	45.243	45.366	45.231	45.046	44.927	44.927	44.800	44.694	44.777	44.783	44.760	44.767	44.767	44.864	45.099	45.203	45.020

COVER LEVEL	46.124	45.375	45.160	44.668	44.723	44.783	44.759	44.786	45.232	45.020
INVERT LEVEL	42.155	42.120	42.235	42.346	42.355	42.401	42.416	42.483	42.546	42.568

TANK LONG SECTION - LONGSECTION
SCALE: H 1:1,V 5:1. DATUM: 40.000

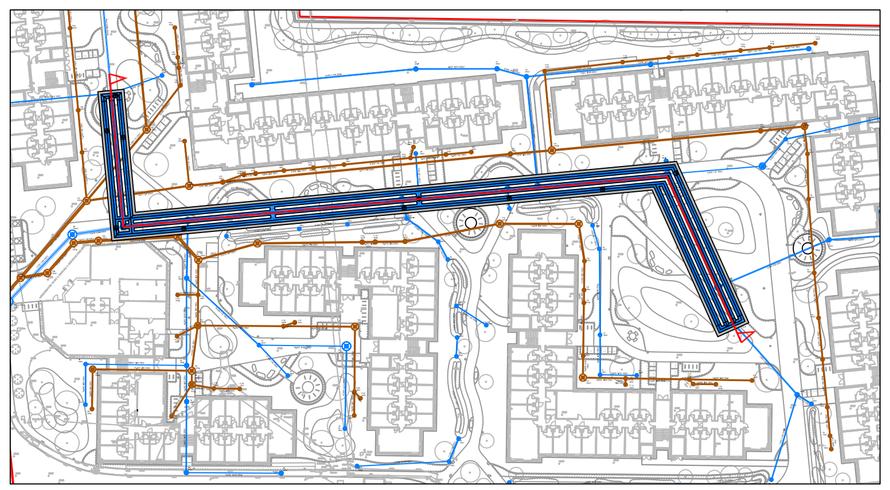

BDP SHALL HAVE NO RESPONSIBILITY FOR ANY USE MADE OF THIS DOCUMENT OTHER THAN FOR THAT WHICH IT WAS PREPARED AND ISSUED.
ALL DIMENSIONS SHOULD BE CHECKED ON SITE.
DO NOT SCALE FROM THIS DRAWING.
ANY DRAWING ERRORS OR DISCREPANCIES SHOULD BE BROUGHT TO THE ATTENTION OF BUILDING DESIGN PARTNERSHIP AT THE ADDRESS SHOWN BELOW

NOTES

1. All dimensions are in metres unless stated otherwise.
2. This drawing should be read in conjunction with all other relevant architectural and engineering details, drawings and specifications.
3. Any discrepancies should be reported to the architect and/or engineer immediately so that clarification can be sought prior to the commencement of work.
4. All information shown on this drawing is in the design development stage and is therefore subject to change as the scheme is progressed. It should not be relied upon for contractual or cost commitment purposes.
5. Building positions/ level are indicative only

REVISION	DRAWN	AUTHORISED	DATE
FIRST ISSUE	CS	JA	21/07/17

REVISION DESCRIPTION

MANCHESTER 1824
The University of Manchester

BDP.
11 Ducie Street
P.O. Box 85, Piccadilly Basin
Manchester M60 3JA
United Kingdom
T +44 (0)161 828 2200
F +44 (0)161 828 2235
www.bdp.com

PROJECT TITLE
Owens Park, Fallowfield
Campus Redevelopment

PROJECT NUMBER
P2006665

DRAWING TITLE
ATTENUATION TANK
LONG SECTION

SCALE @ A0
NTS

DATE
Jul '17

DRAWING No.
(SK)008

REVISION
-

Summary Wizard of 360 minute 100 year Winter I+40% for XDrainage Proposed CIVIL 3D TOSH branch 1 - Copy.ews

Simulation Criteria

Areal Reduction Factor	1.000	Additional Flow - % of Total Flow	0.000
Hot Start (mins)	0	MADD Factor * 10m³/ha Storage	2.000
Hot Start Level (mm)	0	Inlet Coeffiecient	0.800
Manhole Headloss Coeff (Global)	0.500	Flow per Person per Day (l/per/day)	0.000
Foul Sewage per hectare (l/s)	0.000		

Number of Input Hydrographs	0	Number of Storage Structures	0
Number of Online Controls	1	Number of Time/Area Diagrams	0
Number of Offline Controls	0	Number of Real Time Controls	0

Synthetic Rainfall Details

Rainfall Model	FSR	Ratio R	0.376
Region	England and Wales	Cv (Summer)	0.750
M5-60 (mm)	18.000	Cv (Winter)	0.840

Margin for Flood Risk Warning (mm)	300.0
Analysis Timestep	2.5 Second Increment (Extended)
DTS Status	OFF
DVD Status	ON
Inertia Status	ON

Profile(s)	Winter
Duration(s) (mins)	15, 30, 60, 120, 240, 360, 480, 960, 1440
Return Period(s) (years)	2, 30, 100
Climate Change (%)	0, 0, 40

PN	US/MH Name	Storm Rank	Water Level (m)	Surcharged Depth (m)	Flooded Volume (m³)	Flow / Cap.	Overflow (l/s)	Pipe Flow (l/s)	Status
E1.000	E1	13	44.295	-0.180	0.000	0.09		3.6	OK
E1.001	E2	13	44.075	-0.168	0.000	0.15		5.6	OK
E1.002	E3	13	43.956	-0.159	0.000	0.19		7.2	OK
E2.000	E4	13	44.224	-0.186	0.000	0.07		2.1	OK
E2.001	E5	13	44.193	-0.188	0.000	0.07		2.5	OK
E2.002	E6	13	44.070	-0.193	0.000	0.05		3.5	OK
E1.003	E7	13	43.853	-0.140	0.000	0.31		11.3	OK
E1.004	E8	13	43.764	-0.139	0.000	0.31		11.3	OK
E3.000	E9	13	44.141	-0.184	0.000	0.08		2.9	OK
E3.001	E10	13	44.019	-0.184	0.000	0.08		2.9	OK
E3.002	E11	13	43.903	-0.182	0.000	0.08		2.9	OK
E4.000	E12	13	44.110	-0.215	0.000	0.01		0.7	OK
E3.003	E13	13	43.830	-0.189	0.000	0.06		4.3	OK
E3.004	E14	13	43.716	-0.021	0.000	0.13		4.9	OK
E1.005	E15	13	43.709	-0.114	0.000	0.49		18.2	OK
E1.006	E16	6	42.881	-0.867	0.000	0.00		18.1	OK
E5.000	E17	13	44.092	-0.129	0.000	0.05		2.5	OK
E6.000	E18	13	44.131	-0.119	0.000	0.10		1.2	OK

©1982-2016 XP Solutions

Summary Wizard of 360 minute 100 year Winter I+40% for XDrainage Proposed CIVIL 3D TOSH branch 1 - Copy.ews

PN	US/MH Name	Storm Rank	Water Level (m)	Surcharged Depth (m)	Flooded Volume (m³)	Flow / Cap.	Overflow (l/s)	Pipe Flow (l/s)	Status
E6.001	E19	13	44.091	-0.109	0.000	0.17		2.3	OK
E6.002	E20	13	43.962	-0.103	0.000	0.21		2.7	OK
E6.003	E21	13	43.901	-0.189	0.000	0.06		4.8	OK
E1.007	E22	6	42.879	-0.804	0.000	0.01		22.2	OK
E7.000	E23	13	44.063	-0.189	0.000	0.06		2.5	OK
E7.001	E24	13	43.846	-0.188	0.000	0.06		2.5	OK
E8.000	E25	13	44.070	-0.193	0.000	0.05		1.9	OK
E8.001	E26	13	43.857	-0.180	0.000	0.09		3.4	OK
E8.002	E27	13	43.753	-0.173	0.000	0.12		4.3	OK
E7.002	E28	13	43.692	-0.171	0.000	0.13		8.8	OK
E1.008	E29	6	42.876	-0.740	0.000	0.01		26.5	OK
E9.000	E30	13	44.240	-0.110	0.000	0.16		2.0	OK
E9.001	E31	13	44.203	-0.097	0.000	0.27		3.5	OK
E9.002	E32	13	44.058	-0.179	0.000	0.09		3.5	OK
E9.003	E33	13	43.945	-0.174	0.000	0.12		3.5	OK
E9.004	E34	13	43.923	-0.162	0.000	0.18		5.2	OK
E9.005	E35	13	43.883	-0.169	0.000	0.14		5.2	OK
E9.006	E36	13	43.751	-0.193	0.000	0.05		5.2	OK
E1.009	E37	6	42.874	-0.727	0.000	0.01		31.3	OK
E10.000	E38	13	44.020	-0.130	0.000	0.04		2.2	OK
E1.010	E39	6	42.866	-0.689	0.000	0.01		33.5	OK
E11.000	E40	13	44.135	-0.190	0.000	0.06		2.3	OK
E11.001	E41	13	44.018	-0.180	0.000	0.09		2.7	OK
E11.002	E42	13	43.985	-0.179	0.000	0.09		3.6	OK
E11.003	E43	13	43.857	-0.168	0.000	0.15		4.4	OK
E12.000	E44	13	44.021	-0.129	0.000	0.05		1.1	OK
E11.004	E45	13	43.820	-0.162	0.000	0.18		6.2	OK
E11.005	E46	13	43.765	-0.152	0.000	0.23		6.8	OK
E11.006	E47	13	43.735	-0.155	0.000	0.21		6.9	OK
E13.000	E48	13	44.022	-0.128	0.000	0.05		0.7	OK
E13.001	E49	13	43.923	-0.127	0.000	0.06		0.7	OK
E13.002	E50	13	43.866	-0.117	0.000	0.11		1.9	OK
E11.007	E51	13	43.656	-0.180	0.000	0.09		8.9	OK
E1.011	E52	6	42.865	-0.681	0.000	0.01		37.8	OK
E14.000	E53	13	44.113	-0.212	0.000	0.01		0.4	OK
E14.001	E54	13	44.053	-0.174	0.000	0.12		4.3	OK
E14.002	E55	13	43.954	-0.176	0.000	0.11		5.3	OK
E15.000	E56	13	44.270	-0.130	0.000	0.04		0.9	OK
E15.001	E57	13	44.152	-0.109	0.000	0.17		3.1	OK
E14.003	E58	13	43.858	-0.151	0.000	0.24		9.0	OK
E16.000	E59	13	44.697	-0.128	0.000	0.05		0.8	OK
E16.001	E60	13	44.576	-0.104	0.000	0.21		3.5	OK
E17.000	E61	13	44.767	-0.133	0.000	0.03		1.0	OK
E16.002	E62	13	44.398	-0.102	0.000	0.22		6.5	OK
E14.004	E63	13	43.781	-0.108	0.000	0.54		16.8	OK
E1.012	E64	7	42.839	-0.596	0.000	0.01		55.2	OK
E18.000	E65	13	43.530	-0.120	0.000	0.09		1.2	OK

©1982-2016 XP Solutions

Summary Wizard of 360 minute 100 year Winter I+40% for XDrainage Proposed CIVIL 3D TOSH branch 1 - Copy.ews

PN	US/MH Name	Storm Rank	Water Level (m)	Surcharged Depth (m)	Flooded Volume (m³)	Flow / Cap.	Overflow (l/s)	Pipe Flow (l/s)	Status
E19.000	E66	13	43.471	-0.129	0.000	0.05		0.7	OK
E18.001	E67	13	43.414	-0.100	0.000	0.24		3.2	OK
E18.002	E68	13	43.173	-0.234	0.000	0.07		3.2	OK
E20.000	E69	13	43.778	-0.122	0.000	0.08		2.1	OK
E18.003	E70	13	43.168	-0.224	0.000	0.14		6.7	OK
E21.000	E71	13	43.433	-0.192	0.000	0.05		1.7	OK
E21.001	E72	13	43.345	-0.188	0.000	0.07		3.2	OK
E18.004	E73	13	43.122	-0.247	0.000	0.13		11.8	OK
E22.000	E74	13	43.611	-0.135	0.000	0.02		0.6	OK
E23.000	E75	13	43.356	-0.199	0.000	0.03		1.0	OK
E23.001	E76	13	43.319	-0.189	0.000	0.06		2.5	OK
E24.000	E77	13	43.866	-0.068	0.000	0.58		7.4	OK
E24.001	E78	13	43.577	-0.297	0.000	0.10		7.4	OK
E24.002	E79	13	43.545	-0.309	0.000	0.07		7.6	OK
E24.003	E80	13	43.477	-0.307	0.000	0.08		8.1	OK
E24.004	E81	13	43.375	-0.323	0.000	0.05		10.6	OK
E18.005	E82	13	43.100	-0.209	0.000	0.41		27.3	OK
E18.006	E83	7	42.839	0.180	0.000	0.12		28.0	SURCHARGED
E25.000	E84	13	44.230	-0.115	0.000	0.12		1.6	OK
E26.000	E85	13	44.749	-0.101	0.000	0.24		3.1	OK
E26.001	E86	13	44.683	-0.102	0.000	0.22		3.1	OK
E18.007	E87	7	42.835	0.144	0.000	0.12		34.1	SURCHARGED
E1.013	E88	7	42.830	0.210	0.000	0.64		71.6	SURCHARGED
E1.014	E89	7	42.816	0.226	0.000	0.42		73.1	SURCHARGED

©1982-2016 XP Solutions

2 year Return Period Summary of Critical Results by Maximum Level (Rank 1) for XDrainage Proposed CIVIL 3D TOSH branch 1 - Copy.ews

Simulation Criteria

Areal Reduction Factor	1.000	Additional Flow - % of Total Flow	0.000
Hot Start (mins)	0	MADD Factor * 10m³/ha Storage	2.000
Hot Start Level (mm)	0	Inlet Coeffiecient	0.800
Manhole Headloss Coeff (Global)	0.500	Flow per Person per Day (l/per/day)	0.000
Foul Sewage per hectare (l/s)	0.000		

Number of Input Hydrographs	0	Number of Storage Structures	0
Number of Online Controls	1	Number of Time/Area Diagrams	0
Number of Offline Controls	0	Number of Real Time Controls	0

Synthetic Rainfall Details

Rainfall Model	FSR	Ratio R	0.376
Region	England and Wales	Cv (Summer)	0.750
M5-60 (mm)	18.000	Cv (Winter)	0.840

Margin for Flood Risk Warning (mm)	300.0
Analysis Timestep	2.5 Second Increment (Extended)
DTS Status	OFF
DVD Status	ON
Inertia Status	ON

Profile(s)	Winter
Duration(s) (mins)	15, 30, 60, 120, 240, 360, 480, 960, 1440
Return Period(s) (years)	2, 30, 100
Climate Change (%)	0, 0, 40

PN	US/MH Name	Storm	Return Period	Climate Change	First (X) Surcharge	First (Y) Flood	First (Z) Overflow	Overflow Act.	Water Level (m)
E1.000	E1	15 Winter	2	+0%	100/15 Winter				44.314
E1.001	E2	15 Winter	2	+0%	100/15 Winter				44.098
E1.002	E3	15 Winter	2	+0%	30/15 Winter				43.980
E2.000	E4	15 Winter	2	+0%	100/15 Winter				44.241
E2.001	E5	15 Winter	2	+0%	100/15 Winter				44.209
E2.002	E6	15 Winter	2	+0%	100/15 Winter				44.083
E1.003	E7	15 Winter	2	+0%	30/15 Winter				43.887
E1.004	E8	15 Winter	2	+0%	30/15 Winter				43.799
E3.000	E9	15 Winter	2	+0%	100/15 Winter				44.158
E3.001	E10	15 Winter	2	+0%	100/15 Winter				44.036
E3.002	E11	15 Winter	2	+0%	100/15 Winter				43.920
E4.000	E12	15 Winter	2	+0%	100/15 Winter				44.120
E3.003	E13	15 Winter	2	+0%	100/15 Winter				43.845
E3.004	E14	15 Winter	2	+0%	2/15 Winter				43.774
E1.005	E15	15 Winter	2	+0%	30/15 Winter				43.760
E1.006	E16	30 Winter	2	+0%					42.619
E5.000	E17	15 Winter	2	+0%					44.102
E6.000	E18	15 Winter	2	+0%	100/15 Winter				44.145

©1982-2016 XP Solutions

2 year Return Period Summary of Critical Results by Maximum Level (Rank 1) for XDrainage Proposed CIVIL 3D TOSH branch 1 - Copy.ews

PN	US/MH Name	Surcharged Depth (m)	Flooded Volume (m³)	Flow / Cap.	Overflow (l/s)	Pipe Flow (l/s)	Status	Level Exceeded
E1.000	E1	-0.161	0.000	0.17		7.0	OK	
E1.001	E2	-0.145	0.000	0.27		10.3	OK	
E1.002	E3	-0.135	0.000	0.33		12.7	OK	
E2.000	E4	-0.169	0.000	0.14		4.1	OK	
E2.001	E5	-0.172	0.000	0.12		4.7	OK	
E2.002	E6	-0.180	0.000	0.09		6.5	OK	
E1.003	E7	-0.106	0.000	0.54		20.0	OK	
E1.004	E8	-0.104	0.000	0.55		20.1	OK	
E3.000	E9	-0.167	0.000	0.15		5.6	OK	
E3.001	E10	-0.167	0.000	0.15		5.6	OK	
E3.002	E11	-0.165	0.000	0.16		5.7	OK	
E4.000	E12	-0.205	0.000	0.02		1.4	OK	
E3.003	E13	-0.174	0.000	0.12		8.1	OK	
E3.004	E14	0.037	0.000	0.23		8.9	SURCHARGED	
E1.005	E15	-0.063	0.000	0.86		32.1	OK	
E1.006	E16	-1.129	0.000	0.01		26.6	OK	
E5.000	E17	-0.119	0.000	0.09		4.9	OK	
E6.000	E18	-0.105	0.000	0.19		2.4	OK	

©1982-2016 XP Solutions

2 year Return Period Summary of Critical Results by Maximum Level (Rank 1) for XDrainage Proposed CIVIL 3D TOSH branch 1 - Copy.ews

PN	US/MH Name	Storm	Return Period	Climate Change	First (X) Surcharge	First (Y) Flood	First (Z) Overflow	Overflow Act.	Water Level (m)
E6.001	E19	15 Winter	2	+0%	100/15 Winter				44.108
E6.002	E20	15 Winter	2	+0%	100/15 Winter				43.979
E6.003	E21	15 Winter	2	+0%					43.914
E1.007	E22	30 Winter	2	+0%					42.614
E7.000	E23	15 Winter	2	+0%					44.080
E7.001	E24	15 Winter	2	+0%					43.861
E8.000	E25	15 Winter	2	+0%					44.085
E8.001	E26	15 Winter	2	+0%					43.873
E8.002	E27	15 Winter	2	+0%					43.772
E7.002	E28	15 Winter	2	+0%					43.711
E1.008	E29	30 Winter	2	+0%					42.613
E9.000	E30	15 Winter	2	+0%	100/15 Winter				44.258
E9.001	E31	15 Winter	2	+0%	100/15 Winter				44.226
E9.002	E32	15 Winter	2	+0%	100/15 Winter				44.074
E9.003	E33	15 Winter	2	+0%	100/15 Winter				43.964
E9.004	E34	15 Winter	2	+0%	100/15 Winter				43.946
E9.005	E35	15 Winter	2	+0%					43.903
E9.006	E36	15 Winter	2	+0%					43.764
E1.009	E37	30 Winter	2	+0%					42.613
E10.000	E38	15 Winter	2	+0%					44.029
E1.010	E39	30 Winter	2	+0%					42.612
E11.000	E40	15 Winter	2	+0%					44.151
E11.001	E41	15 Winter	2	+0%	100/15 Winter				44.036
E11.002	E42	15 Winter	2	+0%	100/15 Winter				44.002
E11.003	E43	15 Winter	2	+0%	100/15 Winter				43.879
E12.000	E44	15 Winter	2	+0%					44.031
E11.004	E45	15 Winter	2	+0%	100/15 Winter				43.844
E11.005	E46	15 Winter	2	+0%	100/15 Winter				43.792
E11.006	E47	15 Winter	2	+0%	100/15 Winter				43.760
E13.000	E48	15 Winter	2	+0%					44.033
E13.001	E49	15 Winter	2	+0%					43.933
E13.002	E50	15 Winter	2	+0%					43.878
E11.007	E51	15 Winter	2	+0%					43.671
E1.011	E52	30 Winter	2	+0%					42.611
E14.000	E53	15 Winter	2	+0%	100/15 Winter				44.124
E14.001	E54	15 Winter	2	+0%	100/15 Winter				44.070
E14.002	E55	15 Winter	2	+0%	30/15 Winter				43.970
E15.000	E56	15 Winter	2	+0%	100/15 Winter				44.280
E15.001	E57	15 Winter	2	+0%	100/15 Winter				44.166
E14.003	E58	15 Winter	2	+0%	30/15 Winter				43.884
E16.000	E59	15 Winter	2	+0%	100/15 Winter				44.707
E16.001	E60	15 Winter	2	+0%	100/15 Winter				44.593
E17.000	E61	15 Winter	2	+0%	100/15 Winter				44.774
E16.002	E62	15 Winter	2	+0%	100/15 Winter				44.415
E14.004	E63	15 Winter	2	+0%	30/15 Winter				43.833
E1.012	E64	30 Winter	2	+0%					42.600
E18.000	E65	15 Winter	2	+0%	100/15 Winter				43.542

©1982-2016 XP Solutions

2 year Return Period Summary of Critical Results by Maximum Level (Rank 1) for XDrainage Proposed CIVIL 3D TOSH branch 1 - Copy.ews

PN	US/MH Name	Surcharged Depth (m)	Flooded Volume (m³)	Flow / Cap.	Overflow (l/s)	Pipe Flow (l/s)	Status	Level Exceeded
E6.001	E19	-0.092	0.000	0.31		4.2	OK	
E6.002	E20	-0.086	0.000	0.38		4.8	OK	
E6.003	E21	-0.176	0.000	0.11		8.3	OK	
E1.007	E22	-1.069	0.000	0.01		37.3	OK	
E7.000	E23	-0.172	0.000	0.12		4.8	OK	
E7.001	E24	-0.173	0.000	0.12		4.8	OK	
E8.000	E25	-0.178	0.000	0.09		3.7	OK	
E8.001	E26	-0.164	0.000	0.16		6.1	OK	
E8.002	E27	-0.154	0.000	0.22		7.7	OK	
E7.002	E28	-0.152	0.000	0.23		15.6	OK	
E1.008	E29	-1.003	0.000	0.02		46.2	OK	
E9.000	E30	-0.092	0.000	0.32		3.9	OK	
E9.001	E31	-0.074	0.000	0.49		6.3	OK	
E9.002	E32	-0.163	0.000	0.17		6.4	OK	
E9.003	E33	-0.155	0.000	0.21		6.4	OK	
E9.004	E34	-0.139	0.000	0.31		9.3	OK	
E9.005	E35	-0.149	0.000	0.24		9.2	OK	
E9.006	E36	-0.180	0.000	0.09		9.2	OK	
E1.009	E37	-0.988	0.000	0.02		54.0	OK	
E10.000	E38	-0.121	0.000	0.08		4.3	OK	
E1.010	E39	-0.943	0.000	0.02		50.1	OK	
E11.000	E40	-0.174	0.000	0.11		4.4	OK	
E11.001	E41	-0.162	0.000	0.17		5.1	OK	
E11.002	E42	-0.162	0.000	0.17		6.7	OK	
E11.003	E43	-0.146	0.000	0.27		8.0	OK	
E12.000	E44	-0.119	0.000	0.10		2.2	OK	
E11.004	E45	-0.138	0.000	0.32		11.2	OK	
E11.005	E46	-0.125	0.000	0.41		12.1	OK	
E11.006	E47	-0.130	0.000	0.37		12.2	OK	
E13.000	E48	-0.117	0.000	0.11		1.4	OK	
E13.001	E49	-0.117	0.000	0.11		1.4	OK	
E13.002	E50	-0.105	0.000	0.19		3.4	OK	
E11.007	E51	-0.165	0.000	0.16		15.5	OK	
E1.011	E52	-0.935	0.000	0.01		63.5	OK	
E14.000	E53	-0.201	0.000	0.02		0.8	OK	
E14.001	E54	-0.157	0.000	0.19		7.2	OK	
E14.002	E55	-0.160	0.000	0.18		9.0	OK	
E15.000	E56	-0.120	0.000	0.09		1.7	OK	
E15.001	E57	-0.095	0.000	0.29		5.3	OK	
E14.003	E58	-0.125	0.000	0.40		15.4	OK	
E16.000	E59	-0.118	0.000	0.10		1.6	OK	
E16.001	E60	-0.087	0.000	0.36		6.0	OK	
E17.000	E61	-0.126	0.000	0.06		2.1	OK	
E16.002	E62	-0.085	0.000	0.39		11.3	OK	
E14.004	E63	-0.056	0.000	0.91		28.5	OK	
E1.012	E64	-0.835	0.000	0.01		48.1	OK	

©1982-2016 XP Solutions

2 year Return Period Summary of Critical Results by Maximum Level (Rank 1) for XDrainage Proposed CIVIL 3D TOSH branch 1 - Copy.ews

PN	US/MH Name	Surcharged Depth (m)	Flooded Volume (m^3)	Flow / Cap.	Overflow (l/s)	Pipe Flow (l/s)	Status	Level Exceeded
E18.000	E65	-0.108	0.000	0.17		2.3	OK	

©1982-2016 XP Solutions

2 year Return Period Summary of Critical Results by Maximum Level (Rank 1) for XDrainage Proposed CIVIL 3D TOSH branch 1 - Copy.ews

PN	US/MH Name	Storm	Return Period	Climate Change	First (X) Surcharge	First (Y) Flood	First (Z) Overflow	Overflow Act.	Water Level (m)
E19.000	E66	15 Winter	2	+0%	100/15 Winter				43.481
E18.001	E67	15 Winter	2	+0%	100/15 Winter				43.434
E18.002	E68	15 Winter	2	+0%	100/15 Winter				43.204
E20.000	E69	15 Winter	2	+0%					43.789
E18.003	E70	15 Winter	2	+0%	30/15 Winter				43.199
E21.000	E71	15 Winter	2	+0%					43.448
E21.001	E72	15 Winter	2	+0%	100/15 Winter				43.360
E18.004	E73	15 Winter	2	+0%	30/15 Winter				43.182
E22.000	E74	15 Winter	2	+0%					43.616
E23.000	E75	15 Winter	2	+0%					43.366
E23.001	E76	15 Winter	2	+0%					43.333
E24.000	E77	15 Winter	2	+0%	2/15 Winter				43.949
E24.001	E78	15 Winter	2	+0%					43.609
E24.002	E79	15 Winter	2	+0%					43.573
E24.003	E80	15 Winter	2	+0%					43.504
E24.004	E81	15 Winter	2	+0%					43.397
E18.005	E82	15 Winter	2	+0%	100/15 Winter				43.164
E18.006	E83	30 Winter	2	+0%	2/30 Winter				42.674
E25.000	E84	15 Winter	2	+0%					44.245
E26.000	E85	15 Winter	2	+0%	100/15 Winter				44.773
E26.001	E86	15 Winter	2	+0%	100/15 Winter				44.705
E18.007	E87	30 Winter	2	+0%	30/15 Winter				42.670
E1.013	E88	30 Winter	2	+0%	30/15 Winter				42.594
E1.014	E89	30 Winter	2	+0%	30/15 Winter				42.556

PN	US/MH Name	Surcharged Depth (m)	Flooded Volume (m³)	Flow / Cap.	Overflow (l/s)	Pipe Flow (l/s)	Status	Level Exceeded
E19.000	E66	-0.119	0.000	0.09		1.4	OK	
E18.001	E67	-0.080	0.000	0.44		5.9	OK	
E18.002	E68	-0.203	0.000	0.12		5.9	OK	
E20.000	E69	-0.111	0.000	0.15		4.1	OK	
E18.003	E70	-0.193	0.000	0.26		12.1	OK	
E21.000	E71	-0.177	0.000	0.10		3.3	OK	
E21.001	E72	-0.173	0.000	0.12		5.8	OK	
E18.004	E73	-0.187	0.000	0.23		20.2	OK	
E22.000	E74	-0.130	0.000	0.04		1.3	OK	
E23.000	E75	-0.189	0.000	0.06		1.9	OK	
E23.001	E76	-0.175	0.000	0.11		4.4	OK	
E24.000	E77	0.015	0.000	1.13		14.5	SURCHARGED	
E24.001	E78	-0.265	0.000	0.19		14.5	OK	
E24.002	E79	-0.281	0.000	0.14		14.4	OK	
E24.003	E80	-0.280	0.000	0.14		15.4	OK	
E24.004	E81	-0.301	0.000	0.09		19.1	OK	
E18.005	E82	-0.145	0.000	0.68		45.7	OK	

©1982-2016 XP Solutions

2 year Return Period Summary of Critical Results by Maximum Level (Rank 1) for XDrainage Proposed CIVIL 3D TOSH branch 1 - Copy.ews

PN	US/MH Name	Surcharged Depth (m)	Flooded Volume (m³)	Flow / Cap.	Overflow (l/s)	Pipe Flow (l/s)	Status	Level Exceeded
E18.006	E83	0.015	0.000	0.17		39.7	SURCHARGED	
E25.000	E84	-0.100	0.000	0.24		3.2	OK	
E26.000	E85	-0.077	0.000	0.47		6.0	OK	
E26.001	E86	-0.080	0.000	0.44		6.0	OK	
E18.007	E87	-0.021	0.000	0.15		40.7	OK	
E1.013	E88	-0.026	0.000	0.59		66.0	OK	
E1.014	E89	-0.034	0.000	0.39		67.6	OK	

©1982-2016 XP Solutions

30 year Return Period Summary of Critical Results by Maximum Level (Rank 1) for XDrainage Proposed CIVIL 3D TOSH branch 1 - Copy.ews

Simulation Criteria

Areal Reduction Factor	1.000	Additional Flow - % of Total Flow	0.000
Hot Start (mins)	0	MADD Factor * 10m³/ha Storage	2.000
Hot Start Level (mm)	0	Inlet Coeffiecient	0.800
Manhole Headloss Coeff (Global)	0.500	Flow per Person per Day (l/per/day)	0.000
Foul Sewage per hectare (l/s)	0.000		

Number of Input Hydrographs	0	Number of Storage Structures	0
Number of Online Controls	1	Number of Time/Area Diagrams	0
Number of Offline Controls	0	Number of Real Time Controls	0

Synthetic Rainfall Details

Rainfall Model	FSR	Ratio R	0.376
Region	England and Wales	Cv (Summer)	0.750
M5-60 (mm)	18.000	Cv (Winter)	0.840

Margin for Flood Risk Warning (mm)	300.0
Analysis Timestep	2.5 Second Increment (Extended)
DTS Status	OFF
DVD Status	ON
Inertia Status	ON

Profile(s)	Winter
Duration(s) (mins)	15, 30, 60, 120, 240, 360, 480, 960, 1440
Return Period(s) (years)	2, 30, 100
Climate Change (%)	0, 0, 40

PN	US/MH Name	Storm	Return Period	Climate Change	First (X) Surcharge	First (Y) Flood	First (Z) Overflow	Overflow Act.	Water Level (m)
E1.000	E1	15 Winter	30	+0%	100/15 Winter				44.340
E1.001	E2	15 Winter	30	+0%	100/15 Winter				44.227
E1.002	E3	15 Winter	30	+0%	30/15 Winter				44.190
E2.000	E4	15 Winter	30	+0%	100/15 Winter				44.263
E2.001	E5	15 Winter	30	+0%	100/15 Winter				44.232
E2.002	E6	15 Winter	30	+0%	100/15 Winter				44.129
E1.003	E7	15 Winter	30	+0%	30/15 Winter				44.123
E1.004	E8	15 Winter	30	+0%	30/15 Winter				44.032
E3.000	E9	15 Winter	30	+0%	100/15 Winter				44.182
E3.001	E10	15 Winter	30	+0%	100/15 Winter				44.060
E3.002	E11	15 Winter	30	+0%	100/15 Winter				43.995
E4.000	E12	15 Winter	30	+0%	100/15 Winter				44.127
E3.003	E13	15 Winter	30	+0%	100/15 Winter				43.984
E3.004	E14	15 Winter	30	+0%	2/15 Winter				43.965
E1.005	E15	15 Winter	30	+0%	30/15 Winter				43.942
E1.006	E16	30 Winter	30	+0%					42.874
E5.000	E17	15 Winter	30	+0%					44.113
E6.000	E18	15 Winter	30	+0%	100/15 Winter				44.163

©1982-2016 XP Solutions

30 year Return Period Summary of Critical Results by Maximum Level (Rank 1) for XDrainage Proposed CIVIL 3D TOSH branch 1 - Copy.ews

PN	US/MH Name	Surcharged Depth (m)	Flooded Volume (m³)	Flow / Cap.	Overflow (l/s)	Pipe Flow (l/s)	Status	Level Exceeded
E1.000	E1	-0.135	0.000	0.33		13.2	OK	
E1.001	E2	-0.016	0.000	0.47		17.9	OK	
E1.002	E3	0.075	0.000	0.59		22.3	SURCHARGED	
E2.000	E4	-0.147	0.000	0.26		7.8	OK	
E2.001	E5	-0.149	0.000	0.24		9.2	OK	
E2.002	E6	-0.134	0.000	0.17		12.8	OK	
E1.003	E7	0.130	0.000	0.94		34.7	SURCHARGED	
E1.004	E8	0.129	0.000	0.96		34.7	SURCHARGED	
E3.000	E9	-0.143	0.000	0.28		10.6	OK	
E3.001	E10	-0.143	0.000	0.28		10.7	OK	
E3.002	E11	-0.090	0.000	0.28		10.0	OK	
E4.000	E12	-0.198	0.000	0.03		2.7	OK	
E3.003	E13	-0.035	0.000	0.21		14.5	OK	
E3.004	E14	0.228	0.000	0.42		16.0	SURCHARGED	
E1.005	E15	0.119	0.000	1.48		55.3	SURCHARGED	
E1.006	E16	-0.874	0.000	0.01		47.2	OK	
E5.000	E17	-0.108	0.000	0.17		9.3	OK	
E6.000	E18	-0.087	0.000	0.36		4.5	OK	

©1982-2016 XP Solutions

30 year Return Period Summary of Critical Results by Maximum Level (Rank 1) for XDrainage Proposed CIVIL 3D TOSH branch 1 - Copy.ews

PN	US/MH Name	Storm	Return Period	Climate Change	First (X) Surcharge	First (Y) Flood	First (Z) Overflow	Overflow Act.	Water Level (m)
E6.001	E19	15 Winter	30	+0%	100/15 Winter				44.139
E6.002	E20	15 Winter	30	+0%	100/15 Winter				44.019
E6.003	E21	15 Winter	30	+0%					43.940
E1.007	E22	30 Winter	30	+0%					42.873
E7.000	E23	15 Winter	30	+0%					44.101
E7.001	E24	15 Winter	30	+0%					43.883
E8.000	E25	15 Winter	30	+0%					44.102
E8.001	E26	15 Winter	30	+0%					43.903
E8.002	E27	15 Winter	30	+0%					43.809
E7.002	E28	15 Winter	30	+0%					43.749
E1.008	E29	30 Winter	30	+0%					42.870
E9.000	E30	15 Winter	30	+0%	100/15 Winter				44.307
E9.001	E31	15 Winter	30	+0%	100/15 Winter				44.286
E9.002	E32	15 Winter	30	+0%	100/15 Winter				44.102
E9.003	E33	15 Winter	30	+0%	100/15 Winter				44.006
E9.004	E34	15 Winter	30	+0%	100/15 Winter				43.994
E9.005	E35	15 Winter	30	+0%					43.942
E9.006	E36	15 Winter	30	+0%					43.785
E1.009	E37	30 Winter	30	+0%					42.869
E10.000	E38	15 Winter	30	+0%					44.040
E1.010	E39	30 Winter	30	+0%					42.863
E11.000	E40	15 Winter	30	+0%					44.171
E11.001	E41	15 Winter	30	+0%	100/15 Winter				44.063
E11.002	E42	15 Winter	30	+0%	100/15 Winter				44.032
E11.003	E43	15 Winter	30	+0%	100/15 Winter				43.920
E12.000	E44	15 Winter	30	+0%					44.043
E11.004	E45	15 Winter	30	+0%	100/15 Winter				43.891
E11.005	E46	15 Winter	30	+0%	100/15 Winter				43.854
E11.006	E47	15 Winter	30	+0%	100/15 Winter				43.815
E13.000	E48	15 Winter	30	+0%					44.046
E13.001	E49	15 Winter	30	+0%					43.947
E13.002	E50	15 Winter	30	+0%					43.901
E11.007	E51	15 Winter	30	+0%					43.700
E1.011	E52	30 Winter	30	+0%					42.862
E14.000	E53	15 Winter	30	+0%	100/15 Winter				44.176
E14.001	E54	15 Winter	30	+0%	100/15 Winter				44.173
E14.002	E55	15 Winter	30	+0%	30/15 Winter				44.146
E15.000	E56	15 Winter	30	+0%	100/15 Winter				44.291
E15.001	E57	15 Winter	30	+0%	100/15 Winter				44.222
E14.003	E58	15 Winter	30	+0%	30/15 Winter				44.126
E16.000	E59	15 Winter	30	+0%	100/15 Winter				44.720
E16.001	E60	15 Winter	30	+0%	100/15 Winter				44.633
E17.000	E61	15 Winter	30	+0%	100/15 Winter				44.784
E16.002	E62	15 Winter	30	+0%	100/15 Winter				44.469
E14.004	E63	15 Winter	30	+0%	30/15 Winter				44.031
E1.012	E64	30 Winter	30	+0%					42.845
E18.000	E65	15 Winter	30	+0%	100/15 Winter				43.560

©1982-2016 XP Solutions

30 year Return Period Summary of Critical Results by Maximum Level (Rank 1) for XDrainage Proposed CIVIL 3D TOSH branch 1 - Copy.ews

PN	US/MH Name	Surcharged Depth (m)	Flooded Volume (m³)	Flow / Cap.	Overflow (l/s)	Pipe Flow (l/s)	Status	Level Exceeded
E6.001	E19	-0.061	0.000	0.64		8.8	OK	
E6.002	E20	-0.046	0.000	0.80		10.0	OK	
E6.003	E21	-0.150	0.000	0.24		18.3	OK	
E1.007	E22	-0.810	0.000	0.01		52.8	OK	
E7.000	E23	-0.151	0.000	0.23		9.1	OK	
E7.001	E24	-0.151	0.000	0.23		9.1	OK	
E8.000	E25	-0.161	0.000	0.18		7.0	OK	
E8.001	E26	-0.134	0.000	0.33		12.4	OK	
E8.002	E27	-0.117	0.000	0.45		16.0	OK	
E7.002	E28	-0.114	0.000	0.48		32.2	OK	
E1.008	E29	-0.746	0.000	0.02		58.4	OK	
E9.000	E30	-0.043	0.000	0.60		7.4	OK	
E9.001	E31	-0.014	0.000	1.00		12.8	OK	
E9.002	E32	-0.135	0.000	0.34		12.8	OK	
E9.003	E33	-0.113	0.000	0.43		12.9	OK	
E9.004	E34	-0.091	0.000	0.64		19.2	OK	
E9.005	E35	-0.110	0.000	0.51		19.3	OK	
E9.006	E36	-0.159	0.000	0.19		19.4	OK	
E1.009	E37	-0.732	0.000	0.02		69.9	OK	
E10.000	E38	-0.110	0.000	0.16		8.1	OK	
E1.010	E39	-0.692	0.000	0.02		59.7	OK	
E11.000	E40	-0.154	0.000	0.22		8.3	OK	
E11.001	E41	-0.135	0.000	0.33		9.8	OK	
E11.002	E42	-0.132	0.000	0.35		13.3	OK	
E11.003	E43	-0.105	0.000	0.55		16.4	OK	
E12.000	E44	-0.107	0.000	0.18		4.2	OK	
E11.004	E45	-0.091	0.000	0.65		22.9	OK	
E11.005	E46	-0.063	0.000	0.86		25.0	OK	
E11.006	E47	-0.075	0.000	0.78		25.5	OK	
E13.000	E48	-0.104	0.000	0.20		2.7	OK	
E13.001	E49	-0.103	0.000	0.21		2.7	OK	
E13.002	E50	-0.082	0.000	0.42		7.4	OK	
E11.007	E51	-0.136	0.000	0.33		32.5	OK	
E1.011	E52	-0.684	0.000	0.02		79.7	OK	
E14.000	E53	-0.149	0.000	0.04		1.4	OK	
E14.001	E54	-0.054	0.000	0.40		14.7	OK	
E14.002	E55	0.016	0.000	0.38		18.7	SURCHARGED	
E15.000	E56	-0.109	0.000	0.16		3.3	OK	
E15.001	E57	-0.039	0.000	0.63		11.6	OK	
E14.003	E58	0.117	0.000	0.82		31.2	SURCHARGED	
E16.000	E59	-0.105	0.000	0.19		3.0	OK	
E16.001	E60	-0.047	0.000	0.80		13.3	OK	
E17.000	E61	-0.116	0.000	0.12		3.9	OK	
E16.002	E62	-0.031	0.000	0.85		24.6	OK	
E14.004	E63	0.142	0.000	1.90		59.1	SURCHARGED	
E1.012	E64	-0.590	0.000	0.01		63.8	OK	

©1982-2016 XP Solutions

30 year Return Period Summary of Critical Results by Maximum Level (Rank 1) for XDrainage Proposed CIVIL 3D TOSH branch 1 - Copy.ews

PN	US/MH Name	Surcharged Depth (m)	Flooded Volume (m^3)	Flow / Cap.	Overflow (l/s)	Pipe Flow (l/s)	Status	Level Exceeded
E18.000	E65	-0.090	0.000	0.32		4.4	OK	

©1982-2016 XP Solutions

30 year Return Period Summary of Critical Results by Maximum Level (Rank 1) for XDrainage Proposed CIVIL 3D TOSH branch 1 - Copy.ews

PN	US/MH Name	Storm	Return Period	Climate Change	First (X) Surcharge	First (Y) Flood	First (Z) Overflow	Overflow Act.	Water Level (m)
E19.000	E66	15 Winter	30	+0%	100/15 Winter				43.498
E18.001	E67	15 Winter	30	+0%	100/15 Winter				43.481
E18.002	E68	15 Winter	30	+0%	100/15 Winter				43.407
E20.000	E69	15 Winter	30	+0%					43.805
E18.003	E70	15 Winter	30	+0%	30/15 Winter				43.403
E21.000	E71	15 Winter	30	+0%					43.467
E21.001	E72	15 Winter	30	+0%	100/15 Winter				43.409
E18.004	E73	15 Winter	30	+0%	30/15 Winter				43.388
E22.000	E74	15 Winter	30	+0%					43.625
E23.000	E75	15 Winter	30	+0%					43.381
E23.001	E76	15 Winter	30	+0%					43.358
E24.000	E77	15 Winter	30	+0%	2/15 Winter				44.145
E24.001	E78	15 Winter	30	+0%					43.653
E24.002	E79	15 Winter	30	+0%					43.610
E24.003	E80	15 Winter	30	+0%					43.542
E24.004	E81	15 Winter	30	+0%					43.426
E18.005	E82	15 Winter	30	+0%	100/15 Winter				43.309
E18.006	E83	30 Winter	30	+0%	2/30 Winter				42.852
E25.000	E84	15 Winter	30	+0%					44.267
E26.000	E85	15 Winter	30	+0%	100/15 Winter				44.811
E26.001	E86	15 Winter	30	+0%	100/15 Winter				44.740
E18.007	E87	30 Winter	30	+0%	30/15 Winter				42.845
E1.013	E88	30 Winter	30	+0%	30/15 Winter				42.837
E1.014	E89	30 Winter	30	+0%	30/15 Winter				42.818

PN	US/MH Name	Surcharged Depth (m)	Flooded Volume (m³)	Flow / Cap.	Overflow (l/s)	Pipe Flow (l/s)	Status	Level Exceeded
E19.000	E66	-0.102	0.000	0.18		2.7	OK	
E18.001	E67	-0.033	0.000	0.87		11.7	OK	
E18.002	E68	0.000	0.000	0.23		10.9	OK	
E20.000	E69	-0.095	0.000	0.29		7.8	OK	
E18.003	E70	0.011	0.000	0.46		21.5	SURCHARGED	
E21.000	E71	-0.158	0.000	0.19		6.2	OK	
E21.001	E72	-0.124	0.000	0.24		12.1	OK	
E18.004	E73	0.019	0.000	0.43		37.4	SURCHARGED	
E22.000	E74	-0.121	0.000	0.08		2.4	OK	
E23.000	E75	-0.174	0.000	0.12		3.6	OK	
E23.001	E76	-0.150	0.000	0.24		9.5	OK	
E24.000	E77	0.211	0.000	2.12		27.1	SURCHARGED	
E24.001	E78	-0.221	0.000	0.35		27.1	OK	
E24.002	E79	-0.244	0.000	0.26		27.2	OK	
E24.003	E80	-0.242	0.000	0.27		29.0	OK	
E24.004	E81	-0.272	0.000	0.16		35.9	OK	
E18.005	E82	0.000	0.000	1.31		87.7	OK	

©1982-2016 XP Solutions

30 year Return Period Summary of Critical Results by Maximum Level (Rank 1) for XDrainage Proposed CIVIL 3D TOSH branch 1 - Copy.ews

PN	US/MH Name	Surcharged Depth (m)	Flooded Volume (m³)	Flow / Cap.	Overflow (l/s)	Pipe Flow (l/s)	Status	Level Exceeded
E18.006	E83	0.193	0.000	0.30		68.7	SURCHARGED	
E25.000	E84	-0.078	0.000	0.46		6.0	OK	
E26.000	E85	-0.039	0.000	0.88		11.3	OK	
E26.001	E86	-0.045	0.000	0.83		11.4	OK	
E18.007	E87	0.154	0.000	0.31		85.8	SURCHARGED	
E1.013	E88	0.217	0.000	0.64		72.5	SURCHARGED	
E1.014	E89	0.228	0.000	0.42		73.1	SURCHARGED	

©1982-2016 XP Solutions

100 year Return Period Summary of Critical Results by Maximum Level (Rank 1) for XDrainage Proposed CIVIL 3D TOSH branch 1 - Copy.ews

Simulation Criteria

Areal Reduction Factor	1.000	Additional Flow - % of Total Flow	0.000
Hot Start (mins)	0	MADD Factor * 10m³/ha Storage	2.000
Hot Start Level (mm)	0	Inlet Coeffiecient	0.800
Manhole Headloss Coeff (Global)	0.500	Flow per Person per Day (l/per/day)	0.000
Foul Sewage per hectare (l/s)	0.000		

Number of Input Hydrographs	0	Number of Storage Structures	0
Number of Online Controls	1	Number of Time/Area Diagrams	0
Number of Offline Controls	0	Number of Real Time Controls	0

Synthetic Rainfall Details

Rainfall Model	FSR	Ratio R	0.376
Region	England and Wales	Cv (Summer)	0.750
M5-60 (mm)	18.000	Cv (Winter)	0.840

Margin for Flood Risk Warning (mm)	300.0
Analysis Timestep	2.5 Second Increment (Extended)
DTS Status	OFF
DVD Status	ON
Inertia Status	ON

Profile(s)	Winter
Duration(s) (mins)	15, 30, 60, 120, 240, 360, 480, 960, 1440
Return Period(s) (years)	2, 30, 100
Climate Change (%)	0, 0, 40

PN	US/MH Name	Storm	Return Period	Climate Change	First (X) Surcharge	First (Y) Flood	First (Z) Overflow	Overflow Act.	Water Level (m)
E1.000	E1	15 Winter	100	+40%	100/15 Winter				45.020
E1.001	E2	15 Winter	100	+40%	100/15 Winter				44.966
E1.002	E3	15 Winter	100	+40%	30/15 Winter				44.879
E2.000	E4	15 Winter	100	+40%	100/15 Winter				44.803
E2.001	E5	15 Winter	100	+40%	100/15 Winter				44.795
E2.002	E6	15 Winter	100	+40%	100/15 Winter				44.770
E1.003	E7	15 Winter	100	+40%	30/15 Winter				44.759
E1.004	E8	15 Winter	100	+40%	30/15 Winter				44.533
E3.000	E9	15 Winter	100	+40%	100/15 Winter				44.528
E3.001	E10	15 Winter	100	+40%	100/15 Winter				44.496
E3.002	E11	15 Winter	100	+40%	100/15 Winter				44.466
E4.000	E12	15 Winter	100	+40%	100/15 Winter				44.450
E3.003	E13	15 Winter	100	+40%	100/15 Winter				44.447
E3.004	E14	15 Winter	100	+40%	2/15 Winter				44.414
E1.005	E15	15 Winter	100	+40%	30/15 Winter				44.331
E1.006	E16	60 Winter	100	+40%					43.355
E5.000	E17	15 Winter	100	+40%					44.129
E6.000	E18	15 Winter	100	+40%	100/15 Winter				44.304

©1982-2016 XP Solutions

100 year Return Period Summary of Critical Results by Maximum Level (Rank 1) for XDrainage Proposed CIVIL 3D TOSH branch 1 - Copy.ews

PN	US/MH Name	Surcharged Depth (m)	Flooded Volume (m³)	Flow / Cap.	Overflow (l/s)	Pipe Flow (l/s)	Status	Level Exceeded
E1.000	E1	0.545	0.000	0.49		19.6	FLOOD RISK	
E1.001	E2	0.723	0.000	0.76		29.2	FLOOD RISK	
E1.002	E3	0.764	0.000	0.96		36.6	FLOOD RISK	
E2.000	E4	0.393	0.000	0.40		12.0	FLOOD RISK	
E2.001	E5	0.414	0.000	0.35		13.3	FLOOD RISK	
E2.002	E6	0.507	0.000	0.25		18.2	FLOOD RISK	
E1.003	E7	0.766	0.000	1.56		57.6	FLOOD RISK	
E1.004	E8	0.630	0.000	1.59		57.5	SURCHARGED	
E3.000	E9	0.203	0.000	0.45		17.3	SURCHARGED	
E3.001	E10	0.293	0.000	0.41		15.5	SURCHARGED	
E3.002	E11	0.381	0.000	0.44		15.7	SURCHARGED	
E4.000	E12	0.125	0.000	0.06		4.4	SURCHARGED	
E3.003	E13	0.428	0.000	0.32		22.4	SURCHARGED	
E3.004	E14	0.677	0.000	0.66		25.1	SURCHARGED	
E1.005	E15	0.508	0.000	2.44		90.9	SURCHARGED	
E1.006	E16	-0.393	0.000	0.01		60.5	OK	
E5.000	E17	-0.092	0.000	0.31		16.8	OK	
E6.000	E18	0.054	0.000	0.64		8.0	SURCHARGED	

©1982-2016 XP Solutions

100 year Return Period Summary of Critical Results by Maximum Level (Rank 1) for XDrainage Proposed CIVIL 3D TOSH branch 1 - Copy.ews

PN	US/MH Name	Storm	Return Period	Climate Change	First (X) Surcharge	First (Y) Flood	First (Z) Overflow	Overflow Act.	Water Level (m)
E6.001	E19	15 Winter	100	+40%	100/15 Winter				44.281
E6.002	E20	15 Winter	100	+40%	100/15 Winter				44.103
E6.003	E21	15 Winter	100	+40%					43.966
E1.007	E22	60 Winter	100	+40%					43.352
E7.000	E23	15 Winter	100	+40%					44.129
E7.001	E24	15 Winter	100	+40%					43.911
E8.000	E25	15 Winter	100	+40%					44.127
E8.001	E26	15 Winter	100	+40%					43.940
E8.002	E27	15 Winter	100	+40%					43.859
E7.002	E28	15 Winter	100	+40%					43.802
E1.008	E29	60 Winter	100	+40%					43.345
E9.000	E30	15 Winter	100	+40%	100/15 Winter				44.513
E9.001	E31	15 Winter	100	+40%	100/15 Winter				44.452
E9.002	E32	15 Winter	100	+40%	100/15 Winter				44.247
E9.003	E33	15 Winter	100	+40%	100/15 Winter				44.177
E9.004	E34	15 Winter	100	+40%	100/15 Winter				44.121
E9.005	E35	15 Winter	100	+40%					43.990
E9.006	E36	15 Winter	100	+40%					43.804
E1.009	E37	60 Winter	100	+40%					43.342
E10.000	E38	15 Winter	100	+40%					44.054
E1.010	E39	60 Winter	100	+40%					43.326
E11.000	E40	15 Winter	100	+40%					44.266
E11.001	E41	15 Winter	100	+40%	100/15 Winter				44.237
E11.002	E42	15 Winter	100	+40%	100/15 Winter				44.225
E11.003	E43	15 Winter	100	+40%	100/15 Winter				44.156
E12.000	E44	15 Winter	100	+40%					44.104
E11.004	E45	15 Winter	100	+40%	100/15 Winter				44.085
E11.005	E46	15 Winter	100	+40%	100/15 Winter				43.998
E11.006	E47	15 Winter	100	+40%	100/15 Winter				43.913
E13.000	E48	15 Winter	100	+40%					44.063
E13.001	E49	15 Winter	100	+40%					43.964
E13.002	E50	15 Winter	100	+40%					43.932
E11.007	E51	15 Winter	100	+40%					43.729
E1.011	E52	60 Winter	100	+40%					43.323
E14.000	E53	15 Winter	100	+40%	100/15 Winter				44.808
E14.001	E54	15 Winter	100	+40%	100/15 Winter				44.803
E14.002	E55	15 Winter	100	+40%	30/15 Winter				44.720
E15.000	E56	15 Winter	100	+40%	100/15 Winter				44.882
E15.001	E57	15 Winter	100	+40%	100/15 Winter				44.865
E14.003	E58	15 Winter	100	+40%	30/15 Winter				44.605
E16.000	E59	15 Winter	100	+40%	100/15 Winter				45.310
E16.001	E60	15 Winter	100	+40%	100/15 Winter				45.291
E17.000	E61	15 Winter	100	+40%	100/15 Winter				45.148
E16.002	E62	15 Winter	100	+40%	100/15 Winter				45.130
E14.004	E63	15 Winter	100	+40%	30/15 Winter				44.357
E1.012	E64	60 Winter	100	+40%					43.280
E18.000	E65	15 Winter	100	+40%	100/15 Winter				43.844

©1982-2016 XP Solutions

100 year Return Period Summary of Critical Results by Maximum Level (Rank 1) for XDrainage Proposed CIVIL 3D TOSH branch 1 - Copy.ews

PN	US/MH Name	Surcharged Depth (m)	Flooded Volume (m³)	Flow / Cap.	Overflow (l/s)	Pipe Flow (l/s)	Status	Level Exceeded
E6.001	E19	0.081	0.000	1.12		15.2	SURCHARGED	
E6.002	E20	0.038	0.000	1.37		17.1	SURCHARGED	
E6.003	E21	-0.124	0.000	0.40		31.2	OK	
E1.007	E22	-0.331	0.000	0.01		41.7	OK	
E7.000	E23	-0.123	0.000	0.41		16.4	OK	
E7.001	E24	-0.123	0.000	0.42		16.4	OK	
E8.000	E25	-0.136	0.000	0.32		12.7	OK	
E8.001	E26	-0.097	0.000	0.60		22.4	OK	
E8.002	E27	-0.067	0.000	0.82		29.0	OK	
E7.002	E28	-0.061	0.000	0.87		58.0	OK	
E1.008	E29	-0.271	0.000	0.02		47.9	OK	
E9.000	E30	0.163	0.000	1.09		13.5	SURCHARGED	
E9.001	E31	0.152	0.000	1.81		23.2	SURCHARGED	
E9.002	E32	0.010	0.000	0.58		22.1	SURCHARGED	
E9.003	E33	0.058	0.000	0.75		22.5	SURCHARGED	
E9.004	E34	0.036	0.000	1.04		31.0	SURCHARGED	
E9.005	E35	-0.062	0.000	0.84		31.6	OK	
E9.006	E36	-0.140	0.000	0.31		31.7	OK	
E1.009	E37	-0.259	0.000	0.01		52.8	OK	
E10.000	E38	-0.096	0.000	0.28		14.6	OK	
E1.010	E39	-0.229	0.000	0.02		67.5	OK	
E11.000	E40	-0.059	0.000	0.38		14.6	OK	
E11.001	E41	0.039	0.000	0.57		16.9	SURCHARGED	
E11.002	E42	0.061	0.000	0.57		21.9	SURCHARGED	
E11.003	E43	0.131	0.000	0.87		26.1	SURCHARGED	
E12.000	E44	-0.046	0.000	0.32		7.3	OK	
E11.004	E45	0.103	0.000	1.03		36.2	SURCHARGED	
E11.005	E46	0.081	0.000	1.35		39.5	SURCHARGED	
E11.006	E47	0.023	0.000	1.24		40.6	SURCHARGED	
E13.000	E48	-0.087	0.000	0.36		4.8	OK	
E13.001	E49	-0.086	0.000	0.37		4.8	OK	
E13.002	E50	-0.051	0.000	0.75		13.3	OK	
E11.007	E51	-0.107	0.000	0.53		51.8	OK	
E1.011	E52	-0.223	0.000	0.01		66.1	OK	
E14.000	E53	0.483	0.000	0.09		3.1	SURCHARGED	
E14.001	E54	0.576	0.000	0.70		25.8	SURCHARGED	
E14.002	E55	0.590	0.000	0.66		32.2	SURCHARGED	
E15.000	E56	0.482	0.000	0.29		5.8	SURCHARGED	
E15.001	E57	0.604	0.000	1.01		18.6	SURCHARGED	
E14.003	E58	0.596	0.000	1.43		54.2	SURCHARGED	
E16.000	E59	0.485	0.000	0.29		4.4	FLOOD RISK	
E16.001	E60	0.611	0.000	1.14		18.9	FLOOD RISK	
E17.000	E61	0.248	0.000	0.18		6.2	SURCHARGED	
E16.002	E62	0.630	0.000	1.11		32.4	SURCHARGED	
E14.004	E63	0.468	0.000	2.97		92.5	SURCHARGED	
E1.012	E64	-0.155	0.000	0.02		90.7	OK	

©1982-2016 XP Solutions

100 year Return Period Summary of Critical Results by Maximum Level (Rank 1) for XDrainage Proposed CIVIL 3D TOSH branch 1 - Copy.ews

PN	US/MH Name	Surcharged Depth (m)	Flooded Volume (m³)	Flow / Cap.	Overflow (l/s)	Pipe Flow (l/s)	Status	Level Exceeded
E18.000	E65	0.194	0.000	0.55		7.4	FLOOD RISK	

©1982-2016 XP Solutions

100 year Return Period Summary of Critical Results by Maximum Level (Rank 1) for XDrainage Proposed CIVIL 3D TOSH branch 1 - Copy.ews

PN	US/MH Name	Storm	Return Period	Climate Change	First (X) Surcharge	First (Y) Flood	First (Z) Overflow	Overflow Act.	Water Level (m)
E19.000	E66	15 Winter	100	+40%	100/15 Winter				43.820
E18.001	E67	15 Winter	100	+40%	100/15 Winter				43.805
E18.002	E68	15 Winter	100	+40%	100/15 Winter				43.583
E20.000	E69	15 Winter	100	+40%					43.828
E18.003	E70	15 Winter	100	+40%	30/15 Winter				43.576
E21.000	E71	15 Winter	100	+40%					43.567
E21.001	E72	15 Winter	100	+40%	100/15 Winter				43.546
E18.004	E73	15 Winter	100	+40%	30/15 Winter				43.512
E22.000	E74	15 Winter	100	+40%					43.635
E23.000	E75	15 Winter	100	+40%					43.480
E23.001	E76	15 Winter	100	+40%					43.474
E24.000	E77	15 Winter	100	+40%	2/15 Winter				44.696
E24.001	E78	15 Winter	100	+40%					43.712
E24.002	E79	15 Winter	100	+40%					43.659
E24.003	E80	15 Winter	100	+40%					43.591
E24.004	E81	15 Winter	100	+40%					43.487
E18.005	E82	15 Winter	100	+40%	100/15 Winter				43.436
E18.006	E83	60 Winter	100	+40%	2/30 Winter				43.267
E25.000	E84	15 Winter	100	+40%					44.301
E26.000	E85	15 Winter	100	+40%	100/15 Winter				45.094
E26.001	E86	15 Winter	100	+40%	100/15 Winter				44.943
E18.007	E87	60 Winter	100	+40%	30/15 Winter				43.261
E1.013	E88	60 Winter	100	+40%	30/15 Winter				43.253
E1.014	E89	60 Winter	100	+40%	30/15 Winter				43.232

PN	US/MH Name	Surcharged Depth (m)	Flooded Volume (m³)	Flow / Cap.	Overflow (l/s)	Pipe Flow (l/s)	Status	Level Exceeded
E19.000	E66	0.220	0.000	0.30		4.5	FLOOD RISK	
E18.001	E67	0.291	0.000	1.42		19.1	SURCHARGED	
E18.002	E68	0.176	0.000	0.40		19.1	SURCHARGED	
E20.000	E69	-0.072	0.000	0.53		14.1	OK	
E18.003	E70	0.184	0.000	0.87		40.2	SURCHARGED	
E21.000	E71	-0.058	0.000	0.32		10.5	OK	
E21.001	E72	0.013	0.000	0.39		19.1	SURCHARGED	
E18.004	E73	0.143	0.000	0.79		69.0	SURCHARGED	
E22.000	E74	-0.111	0.000	0.15		4.3	OK	
E23.000	E75	-0.075	0.000	0.20		6.1	OK	
E23.001	E76	-0.034	0.000	0.39		15.5	OK	
E24.000	E77	0.762	0.000	3.69		47.0	FLOOD RISK	
E24.001	E78	-0.162	0.000	0.61		46.6	OK	
E24.002	E79	-0.195	0.000	0.46		47.8	OK	
E24.003	E80	-0.193	0.000	0.47		50.3	OK	
E24.004	E81	-0.211	0.000	0.28		63.2	OK	
E18.005	E82	0.127	0.000	2.39		159.6	SURCHARGED	

©1982-2016 XP Solutions

100 year Return Period Summary of Critical Results by Maximum Level (Rank 1) for XDrainage Proposed CIVIL 3D TOSH branch 1 - Copy.ews

PN	US/MH Name	Surcharged Depth (m)	Flooded Volume (m^3)	Flow / Cap.	Overflow (l/s)	Pipe Flow (l/s)	Status	Level Exceeded
E18.006	E83	0.608	0.000	0.44		99.0	SURCHARGED	
E25.000	E84	-0.044	0.000	0.84		10.8	OK	
E26.000	E85	0.244	0.000	1.52		19.5	SURCHARGED	
E26.001	E86	0.158	0.000	1.41		19.4	SURCHARGED	
E18.007	E87	0.570	0.000	0.44		120.7	SURCHARGED	
E1.013	E88	0.633	0.000	0.67		75.3	SURCHARGED	
E1.014	E89	0.642	0.000	0.43		73.8	SURCHARGED	

©1982-2016 XP Solutions

Proposed Catchment Areas				
Phase	Building (m^2)	Hardstanding (m^2)	Soft Landscaping (m^2)	Total (m^2)
1	9022	8236	9292	26550

Existing car park area outside of boundary to be drained into Phase 1A drainage network. Additional catchment area therefore included in table figures above.

Key

- Planning Boundary
- Phase 1 Boundary
  1.73ha Impermeable
  0.93ha Permeable
- Proposed Soft Landscaping Area
- Proposed Hardstanding Area
- Proposed Building Area

BUILDING DESIGN PARTNERSHIP SHALL HAVE NO RESPONSIBILITY FOR ANY USE MADE OF THIS DOCUMENT OTHER THAN FOR THAT WHICH IT WAS PREPARED AND ISSUED.

ALL DIMENSIONS SHOULD BE CHECKED ON SITE.

DO NOT SCALE FROM THIS DRAWING.

ANY DRAWING ERRORS OR DIVERGENCES SHOULD BE BROUGHT TO THE ATTENTION OF BUILDING DESIGN PARTNERSHIP AT THE ADDRESS SHOWN BELOW.

NOTES

REVISION	DESCRIPTION	DRAWN	CHECKED	DATE
FIRST ISSUE		CS	JP	20/09/16

KEY PLAN

CLIENT

MANCHESTER 1824
The University of Manchester

BDP.

11 Ducie Street
P.O. Box 85, Piccadilly Basin
Manchester M60 3JA
United Kingdom
T +44 (0)161 828 2200
F +44 (0)161 828 2235
www.bdp.com

PROJECT TITLE
Owens Park, Fallowfield Campus Redevelopment

PROJECT NUMBER
P2006665

DRAWING TITLE
Flood Risk Assessment & Drainage Strategy
Proposed Catchment Areas

SCALE @A1
1:1000

DATE
Mar '15

DRAWING No.
P00_00_(SK)_Z0_C_002

REVISION
-

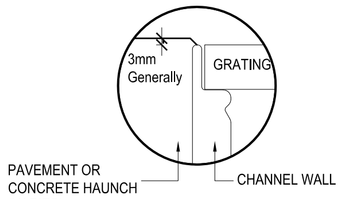

DETAIL A

SCALE 1:10

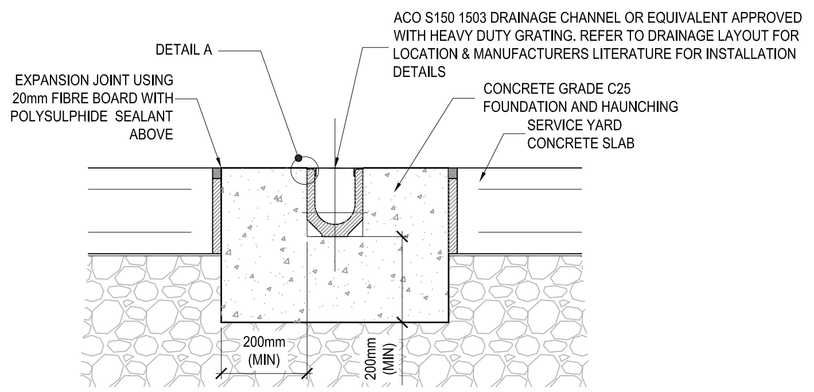

TYPICAL DRAINAGE CHANNEL DETAIL CONCRETE PAVEMENT

Scale 1:10

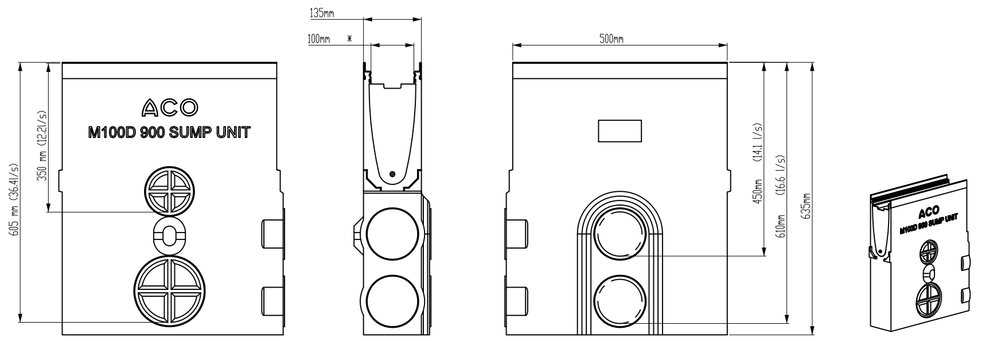

ACO UNIVERSAL SUMP UNIT

Scale 1:10

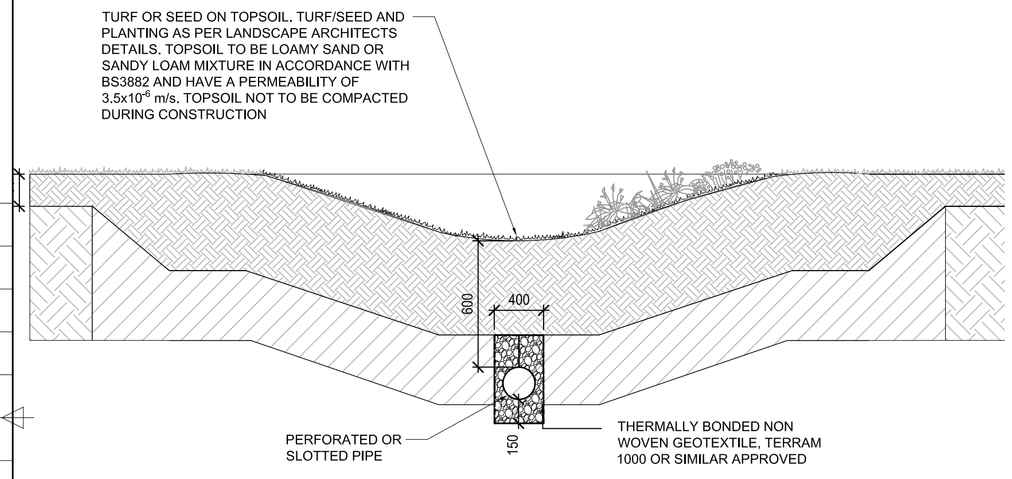

TYPICAL DRY SWALE DETAIL

SCALE 1:20

REFER TO LANDSCAPE ARCHITECTS DETAILS FOR SWALE DIMENSIONS

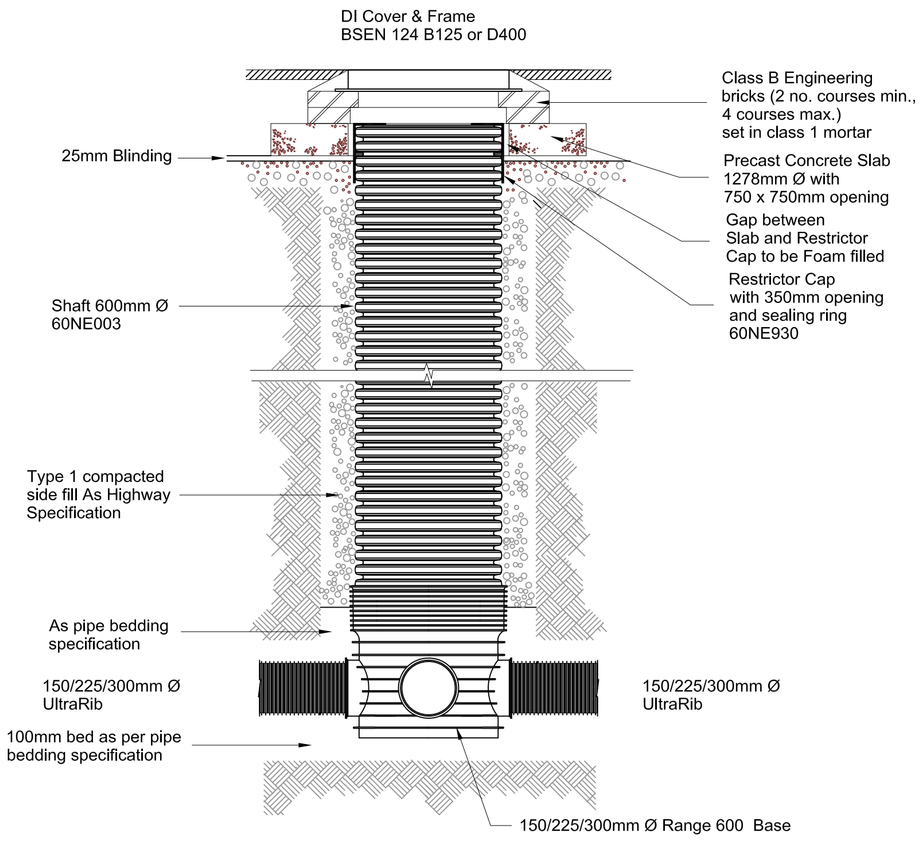

Range 600 Chamber B125 / D400 Loading

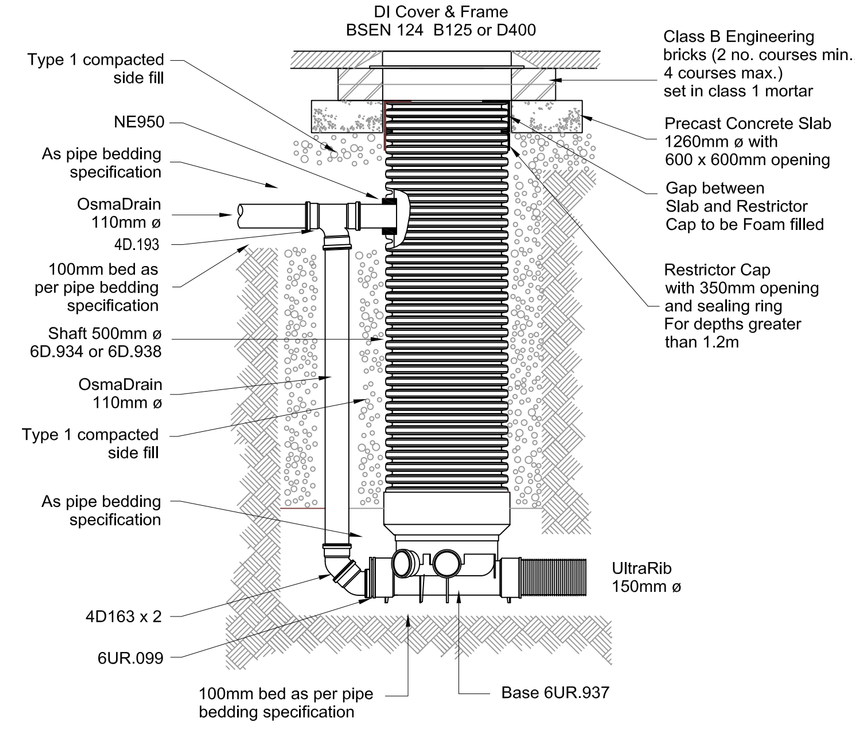

NIC Chamber with 110mm Back Drop

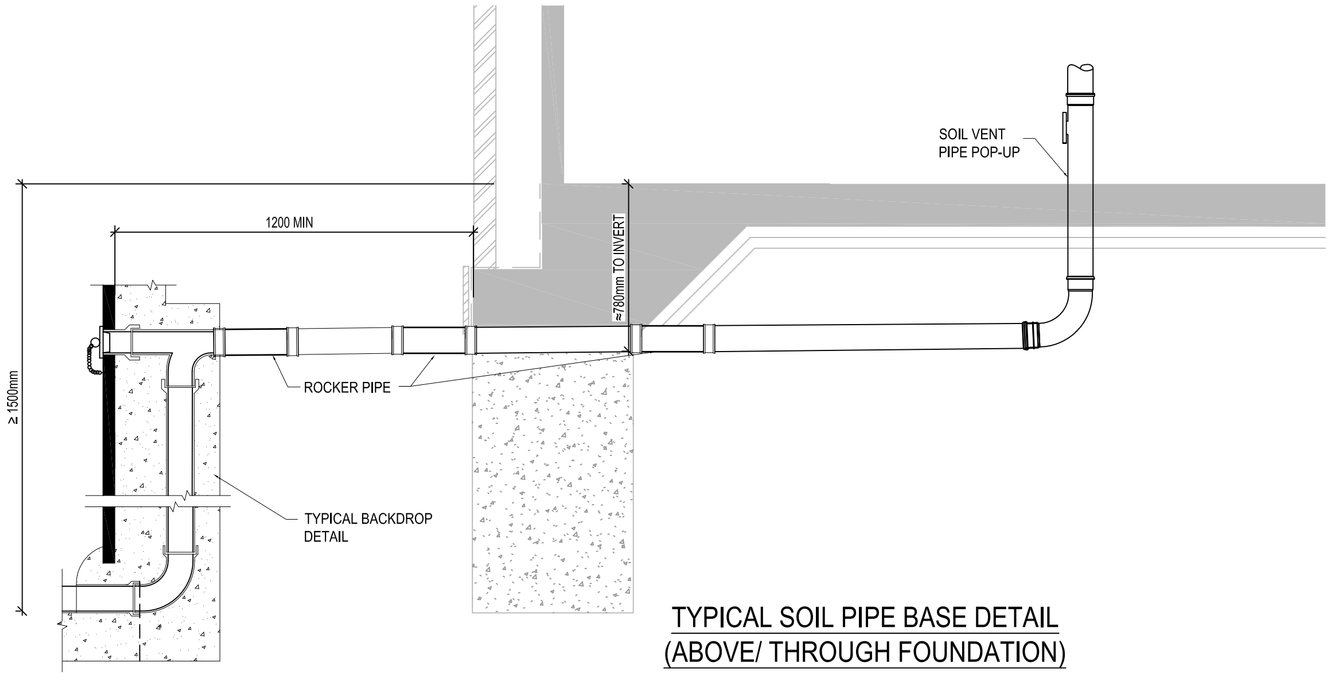

TYPICAL SOIL PIPE BASE DETAIL (ABOVE/ THROUGH FOUNDATION)

DETAIL APPLIES TO ALL CONNECTIONS TO EXTERNAL MANHOLES/ INSPECTION CHAMBERS
WHERE DEPTH TO INVERT IS EQUAL TO OR MORE THAN 1.5m

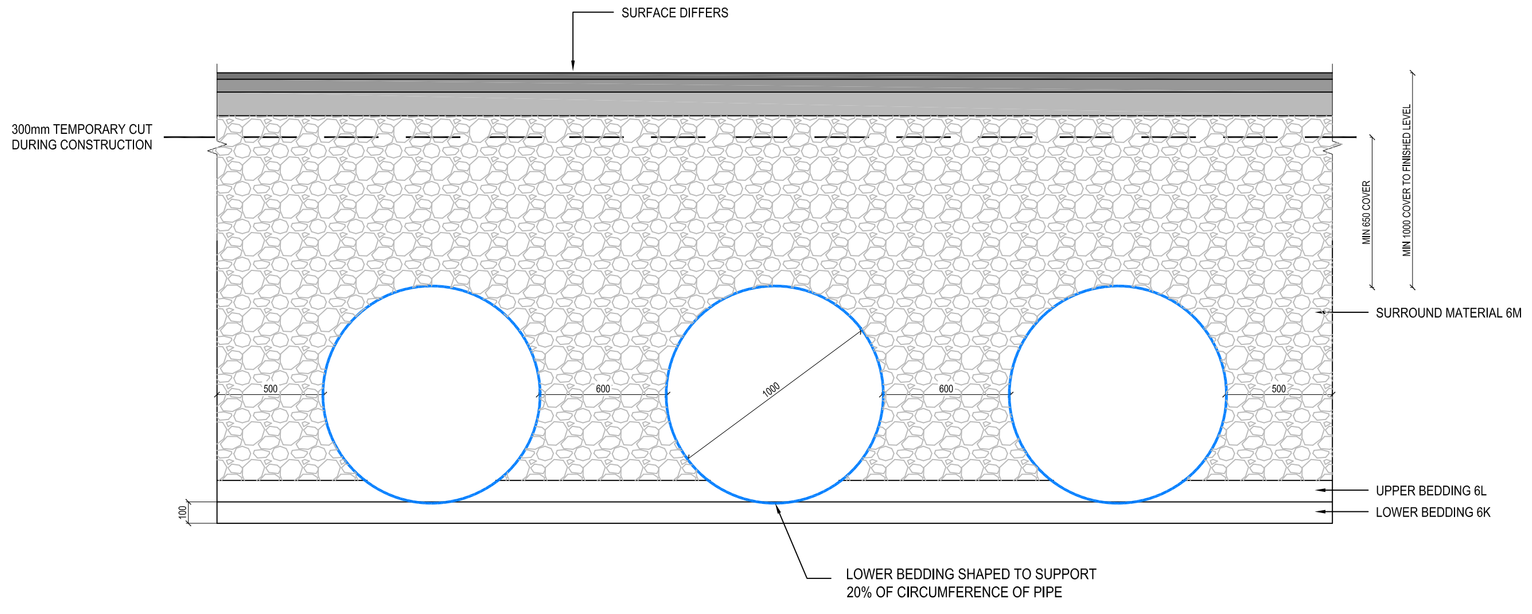

SECTION THROUGH TUBOSIDER ATTENUATION

BUILDING DESIGN PARTNERSHIP SHALL HAVE NO RESPONSIBILITY FOR ANY USE MADE OF THIS DOCUMENT OTHER THAN FOR THAT WHICH IT WAS PREPARED AND ISSUED.

ALL DIMENSIONS SHOULD BE CHECKED ON SITE.

DO NOT SCALE FROM THIS DRAWING.

ANY DRAWING ERRORS OR DIVERGENCES SHOULD BE BROUGHT TO THE ATTENTION OF BUILDING DESIGN PARTNERSHIP AT THE ADDRESS SHOWN BELOW.

NOTES

1. ALL DIMENSIONS ARE IN MILLIMETRES UNLESS OTHERWISE STATED.
2. THIS DRAWING IN FOR INFORMATION ONLY AND SHOULD BE READ IN CONJUNCTION WITH OTHER RELEVANT DESIGN DRAWINGS/SPECIFICATIONS.
3. SERVICES ARE PRESENT IN THE AREA. CONTRACTOR TO ESTABLISH THE PRECISE LINE AND DEPTH OF ALL SERVICES PRIOR TO COMMENCING ANY EXCAVATION WORKS.

REVISION DESCRIPTION	DRAWN	CHECKED	DATE
P04 UPDATED IN LINE WITH CARILLION COMMENTS	CS	JA	19/07/17
P03 - STAGE 4 ISSUE	CS	DN	05/06/17
P02 - STAGE 3 ISSUE	CS	DN	07/04/17
P01 - ISSUED FOR ITT	CS	JP	17/11/16
FIRST ISSUE			

KEY PLAN

CLIENT

MANCHESTER 1824
The University of Manchester

BDP.
11 Ducie Street
P.O. Box 85, Piccadilly Basin
Manchester M60 3JA
United Kingdom
T +44 (0)161 828 2200
F +44 (0)161 828 2235
www.bdp.com

PROJECT TITLE
Owens Park, Fallowfield Campus redevelopment

PROJECT NUMBER
P2006665

DRAWING TITLE
Drainage Details
Sheet 2 of 2

SCALE @ A1
As Shown

DATE
Nov '16

DRAWING No.
P00_00_(52)_Z0_C_301

REVISION
P04

SEE INSET

CUT LINE - SEE INSET



BDP SHALL HAVE NO RESPONSIBILITY FOR ANY USE MADE OF THIS DOCUMENT OTHER THAN FOR THAT WHICH IT WAS PREPARED AND ISSUED.
ALL DIMENSIONS SHOULD BE CHECKED ON SITE.
DO NOT SCALE FROM THIS DRAWING.
ANY DRAWING ERRORS OR DISCREPANCIES SHOULD BE BROUGHT TO THE ATTENTION OF BUILDING DESIGN PARTNERSHIP AT THE ADDRESS SHOWN BELOW

NOTES

1. All dimensions are in metres unless stated otherwise.
2. This drawing should be read in conjunction with all other relevant architectural and engineering details, drawings and specifications.
3. Any discrepancies should be reported to the architect and/or engineer immediately so that clarification can be sought prior to the commencement of work.

KEY

- Planning Boundary
- Phase 1 Site Boundary
- Existing Combined Drain & Manhole
- Existing Foul Drain & Manhole
- Existing Surface Water Drain & Manhole
- Existing Surface Water Gully
- Existing Public Combined Sewer & Manhole
- Existing Public surface Water Sewer & Manhole
- Existing Land Drainage
- Existing Soft Landscaping Area
- Existing Hardstanding Area

Existing Catchment Areas				
Phase	Building (m²)	Hardstanding (m²)	Soft Landscaping (m²)	Total (m²)
1	0	5640	20910	26550

First Issue	CS	JP	20/08/15
REVISION DESCRIPTION	DRAWN	AUTHORISED	DATE

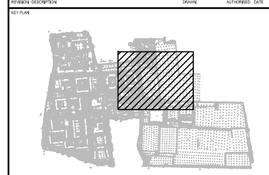

MANCHESTER 1824
The University of Manchester

BDP.

11 Ducie Street
P.O. Box 85, Piccadilly Basin
Manchester M60 3JA
United Kingdom
T +44 (0)161 828 2200
F +44 (0)161 828 2235
www.bdp.com

Project title: Owens Park, Fallowfield Campus Redevelopment	
Project no.: P2006665	
Drawing title: Phase 1A Existing Drainage & Catchment Areas	Scale @ A0: 1:250
	Date: Aug '15
Drawing no.: P1_00_(52)_Z0_C_100	Revision: -