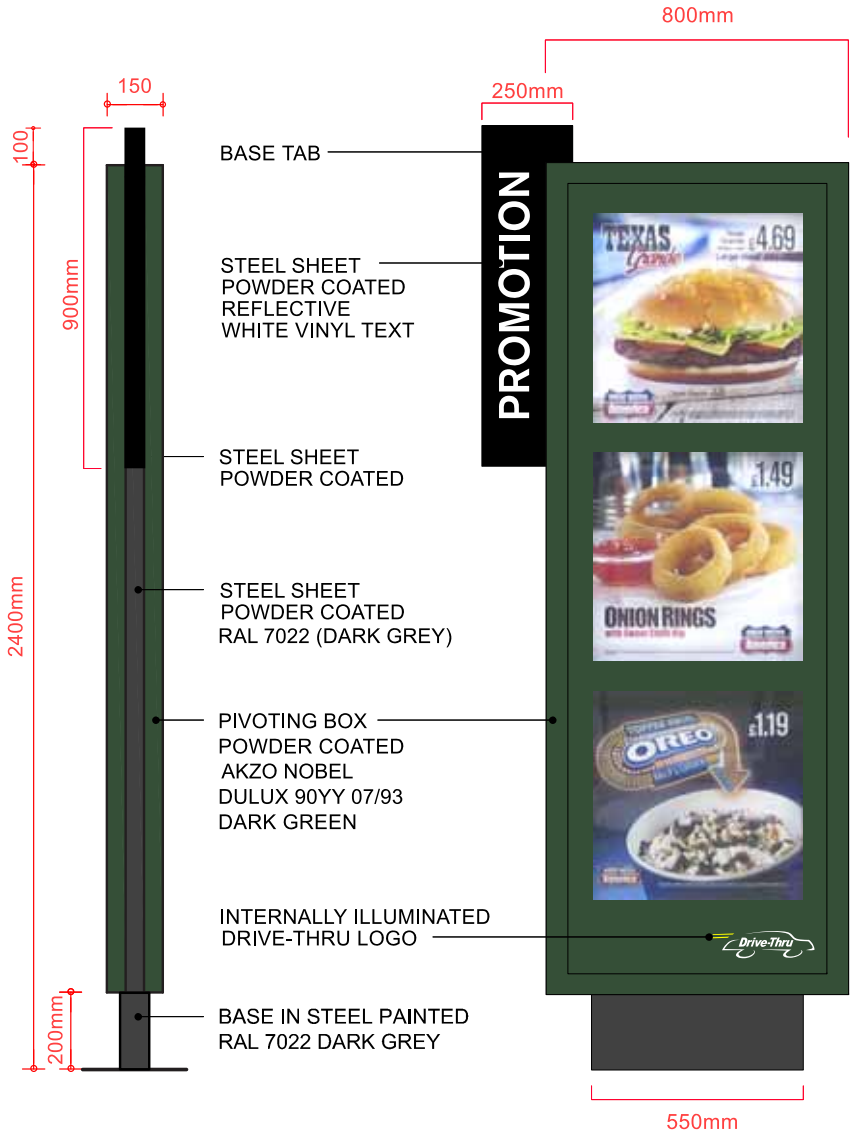

NB. TABS CURRENTLY UNDER REVIEW FOR USE IN THE UK.

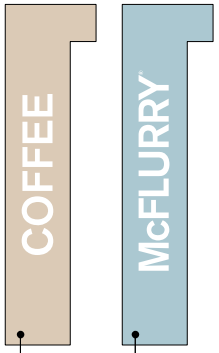

MAGNETIC TABS
DIGITALLY PRINTED
COLOUR OVERLAY WITH
WHITE REFLECTIVE TEXT

scale 1:10

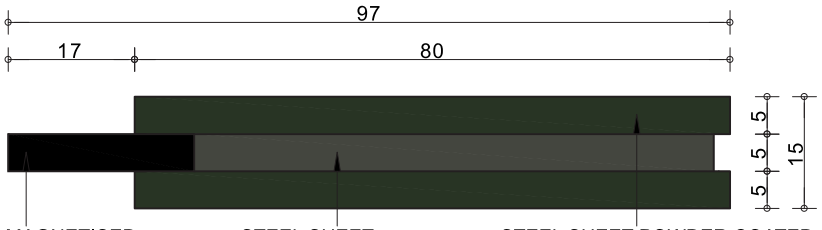

MAGNETISED
STEEL SHEET
POWDER COATED

STEEL SHEET
POWDER COATED
RAL 7022 DARK GREY

STEEL SHEET POWDER COATED
AKZO NOBEL DULUX 90YY 07/93
DARK GREEN

scale 1:10

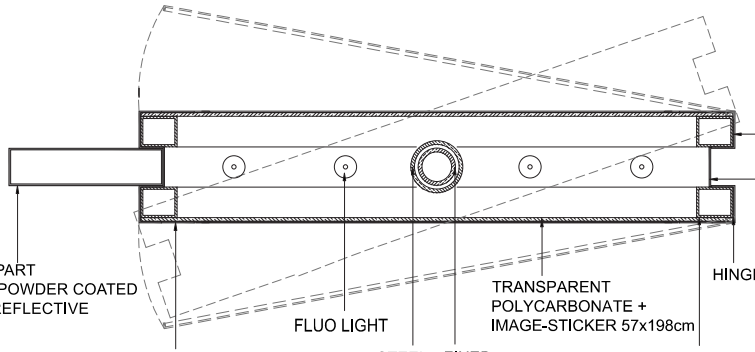

STEEL SHEET
POWDER COATED
AKZO NOBEL DULUX
90YY 07/93
DARK GREEN

STEEL SHEET
POWDER COATED
RAL 7022 DARK GREY

HINGE

MAGNETISED PART
STEEL SHEET POWDER COATED
TEXT: WHITE REFLECTIVE

FLUO LIGHT

TRANSPARENT
POLYCARBONATE +
IMAGE-STICKER 57x198cm

STEEL SHEET 2mm
POWDER COATED
AKZO NOBEL DULUX 90YY 07/93
DARK GREEN

STEEL
TUBE
FP

FIXED
STEEL SUPPORT
78% (
FP

STEEL PROFILE

