

McDRIVE LOGO BOX
IS ADJUSTABLE AND POINTS
TO THE DRIVE-THRU LANE.

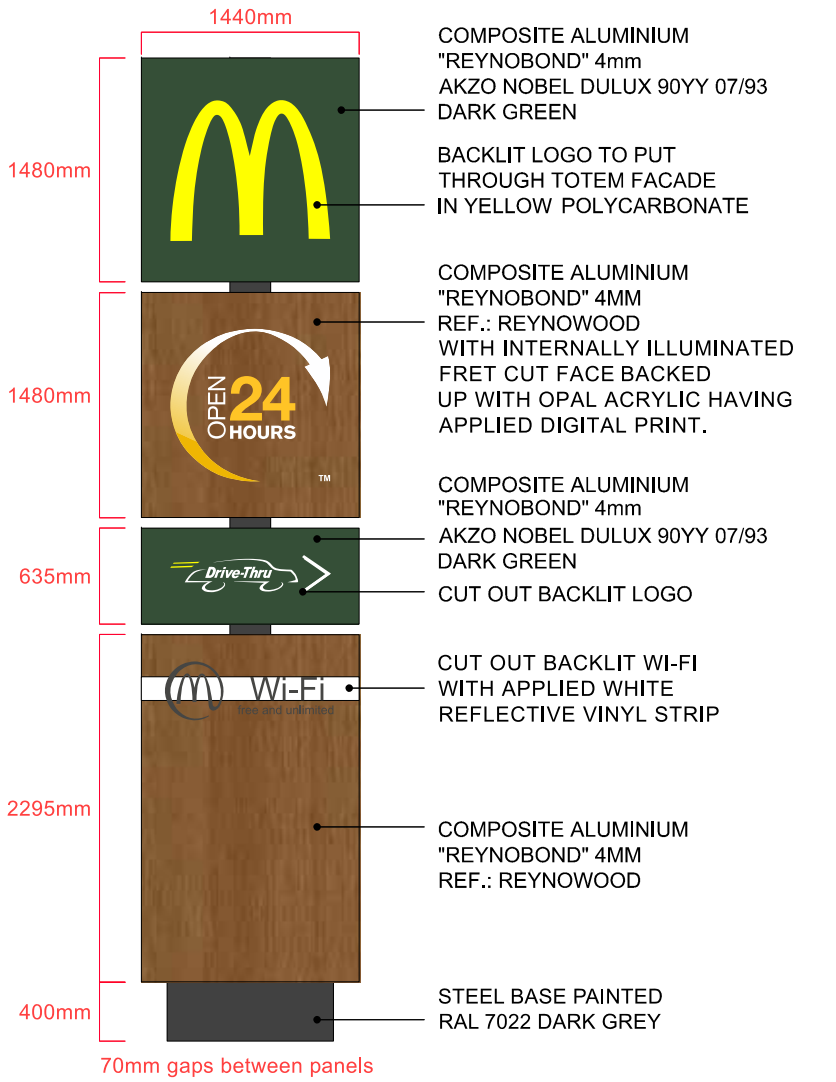

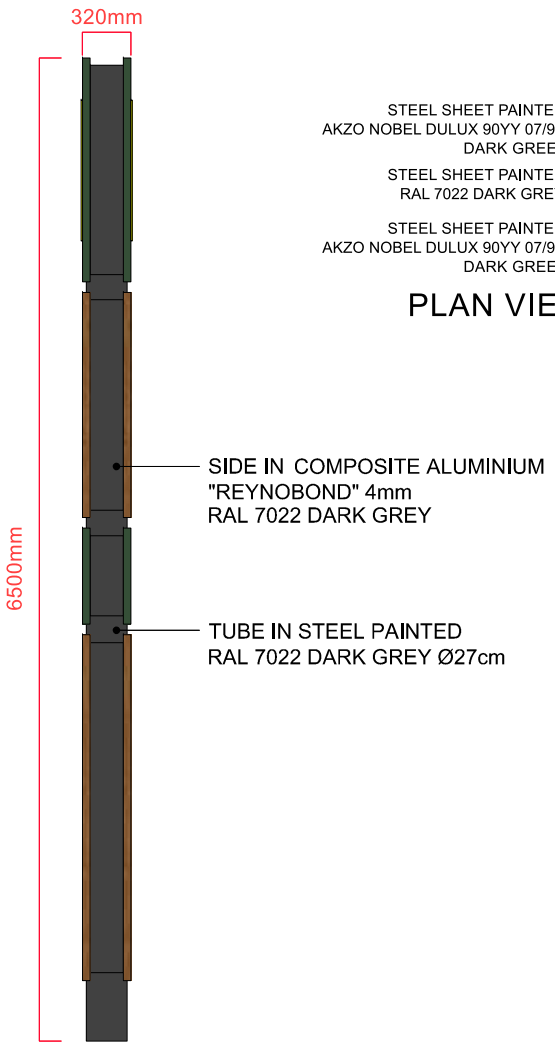

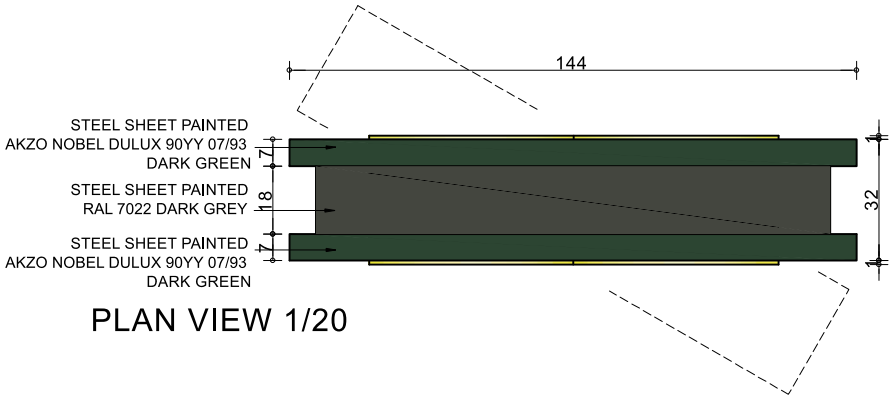

PLAN VIEW 1/20

