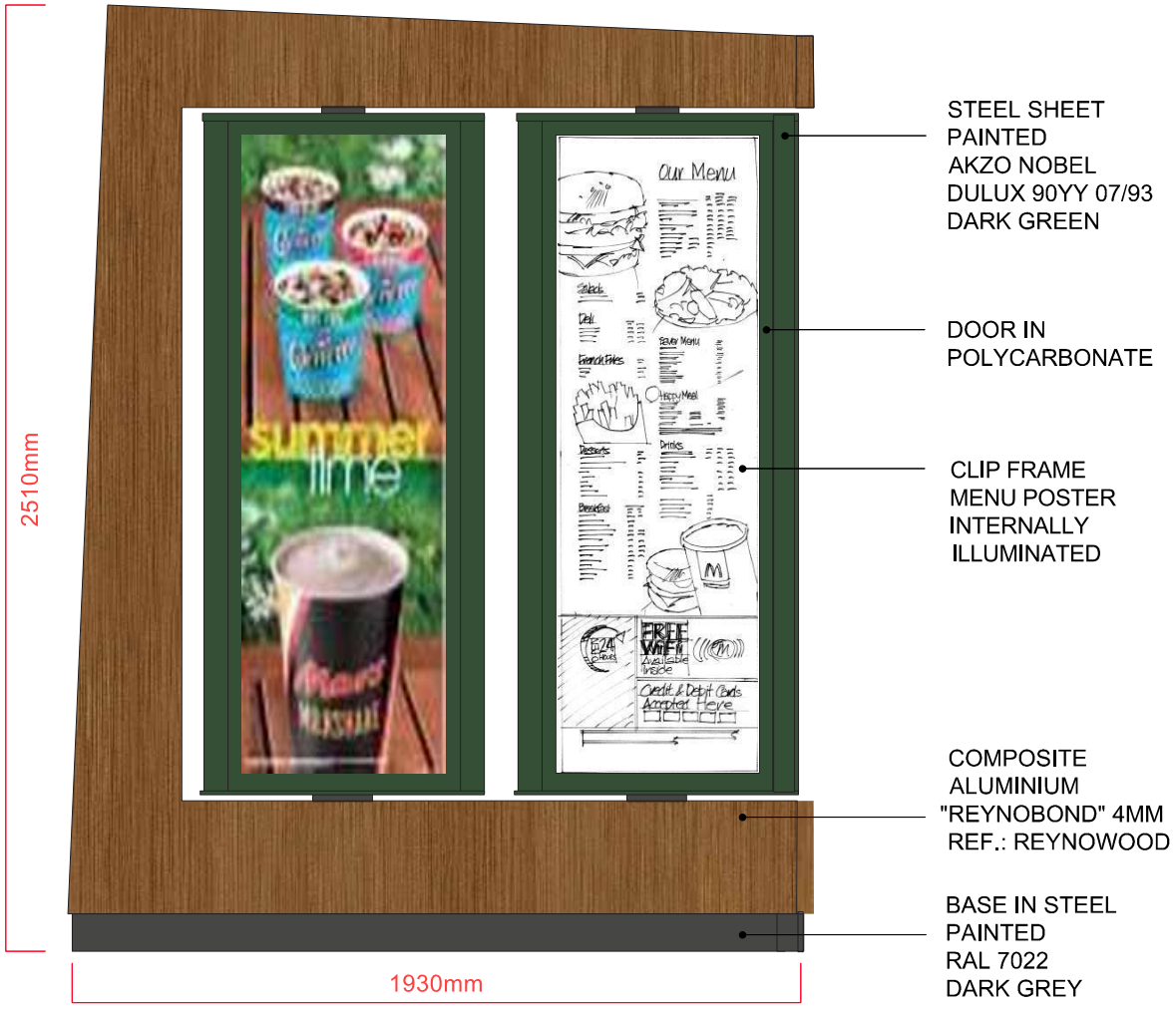
2510mm
1930mm
Our Menu
summer time
STEEL SHEET
PAINTED
AKZO NOBEL
DULUX 90YY 07/93
DARK GREEN
DOOR IN
POLYCARBONATE
CLIP FRAME
MENU POSTER
INTERNALLY
ILLUMINATED
COMPOSITE
ALUMINIUM
"REYNOBOND" 4MM
REF.: REYNOWOOD
BASE IN STEEL
PAINTED
RAL 7022
DARK GREY

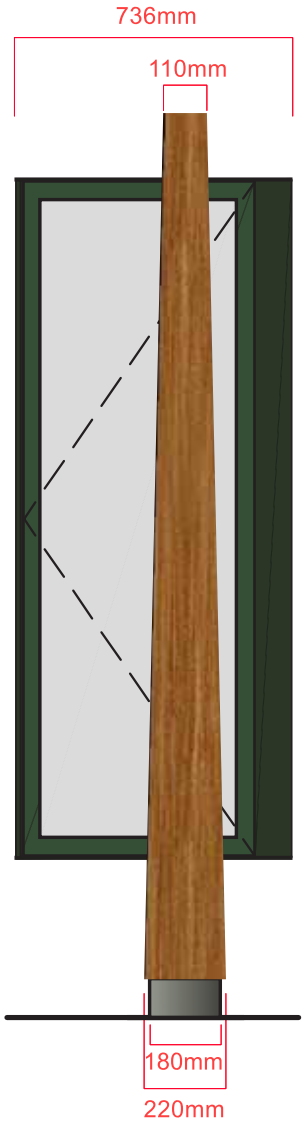
736mm
110mm
180mm
220mm

SECTION

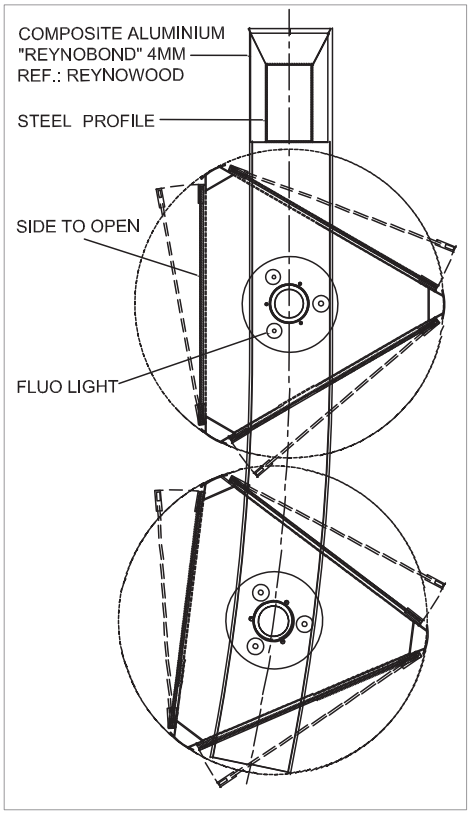
COMPOSITE ALUMINIUM
"REYNOBOND" 4MM
REF.: REYNOWOOD
STEEL PROFILE
SIDE TO OPEN
FLUO LIGHT


0
1
2
3
4
5
1:20@A4 scale bar
Metres