
FRESHLY
GROUND
COFFEE
COMPOSITE ALUMINIUM
"REYNOBOND" 4MM
REF.: REYNOWOOD
STEEL FRAME PAINTED
AKZO NOBEL DULUX 90YY 07/93
DARK GREEN
POLYCARBONATE DOOR
+ BACKLIT GRAPHIC
TUBE PAINTED
RAL 7022 DARK GREY
BASE IN STEEL PAINTED
RAL 7022 DARK GREY
2640mm
1700mm
150mm

SECTION

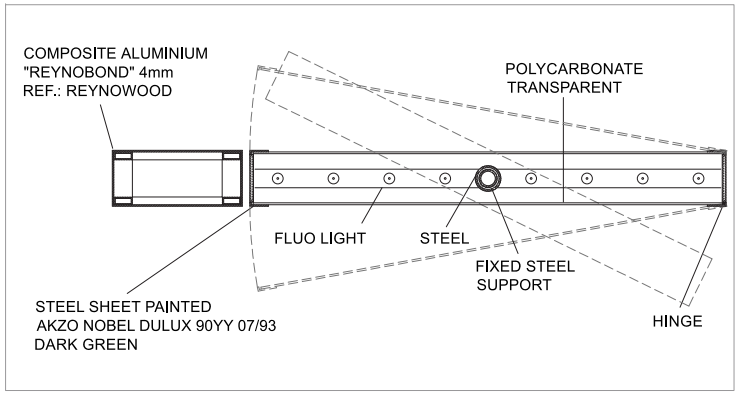
COMPOSITE ALUMINIUM
"REYNOBOND" 4mm
REF.: REYNOWOOD
POLYCARBONATE
TRANSPARENT
FLUO LIGHT
STEEL
FIXED STEEL
SUPPORT
STEEL SHEET PAINTED
AKZO NOBEL DULUX 90YY 07/93
DARK GREEN
HINGE


0
1
2
3
4
5
1:20@A4 scale bar
Metres