Technical drawings

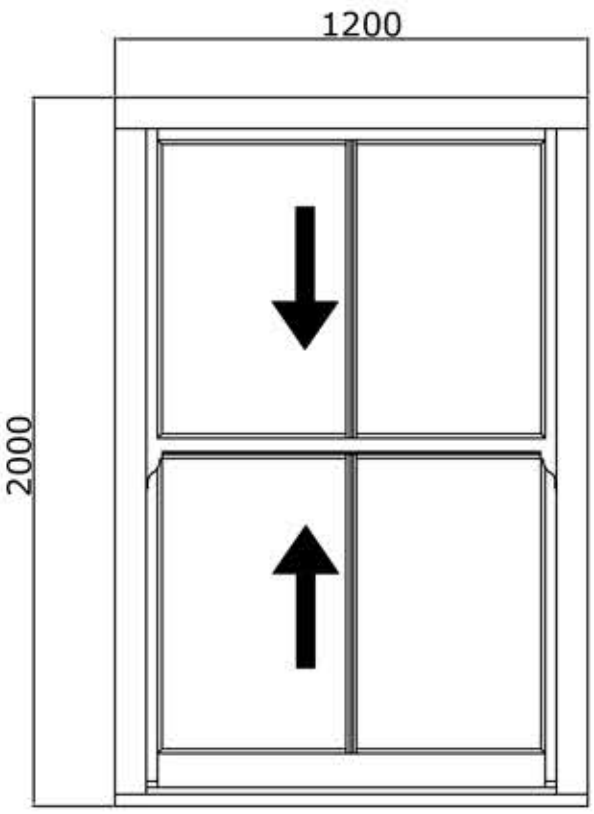

'U' value	Energy rating	Acoustic performance
1.49 W/m²K	A	-34 dB

All values are based on standard specifications, and can be altered through use of options.

Maximum Sizes (White profile):
35mm Mid Rail/Slim Sash Option 1200mm X 2000mm
Slim/Intermediate Sash Option 1500mm X 3000mm

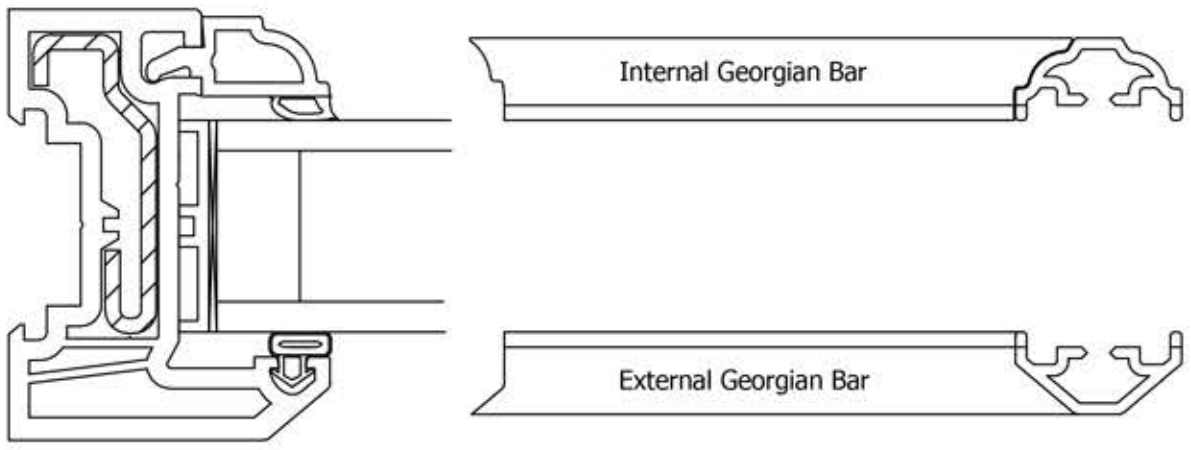

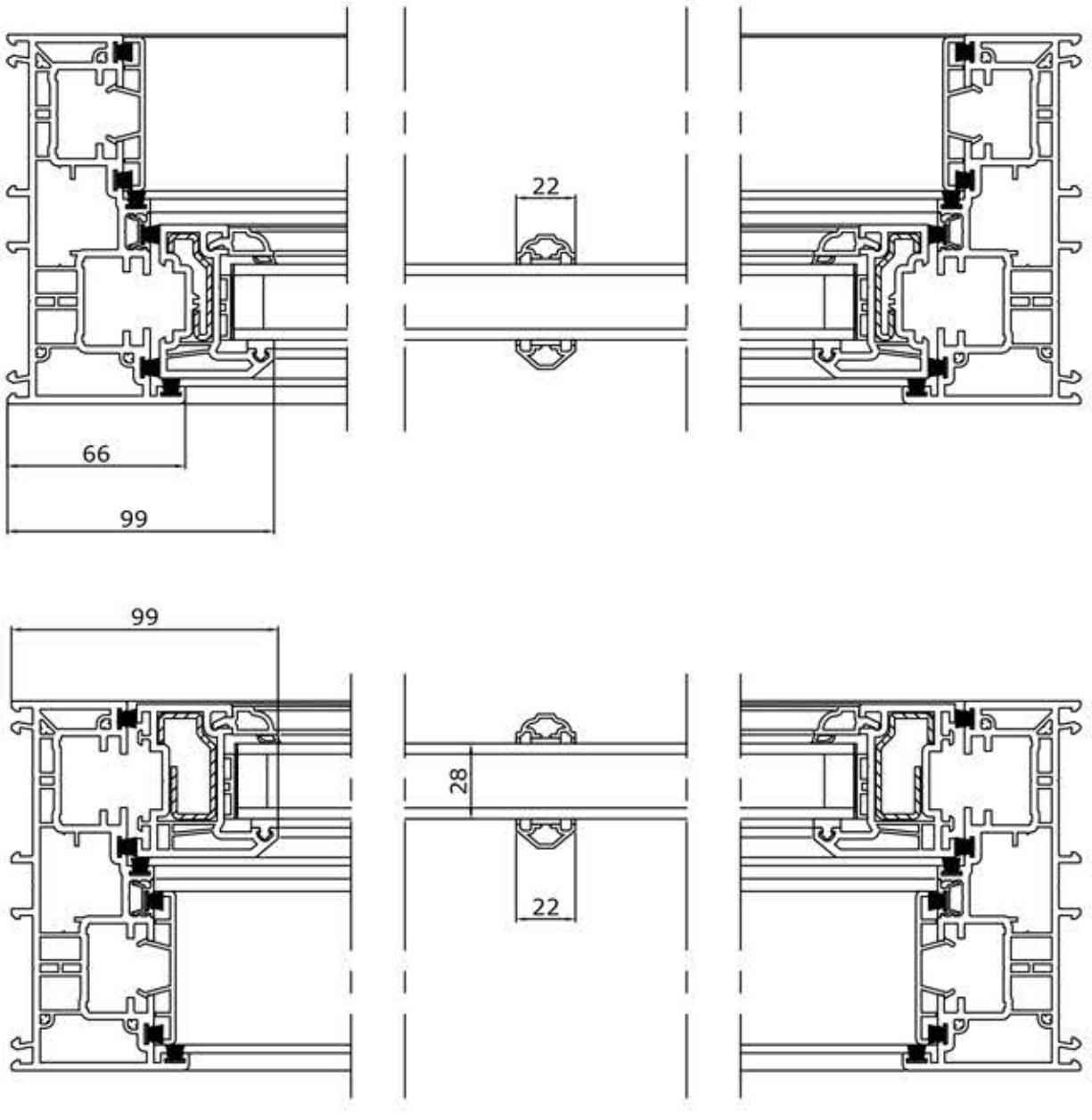

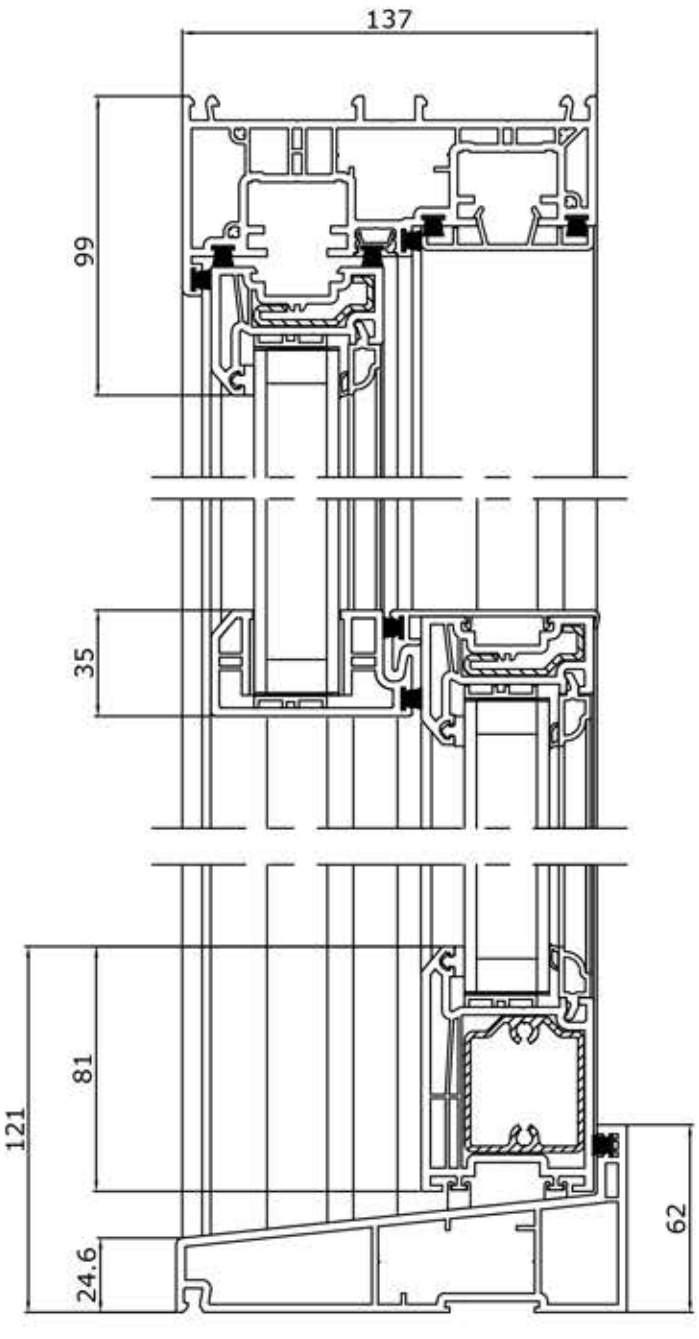

Roseview windows

35 Stilebrook Road
Olney, Bucks. MK46 5EA
phone: 01234 712657
web: www.roseview.co.uk

© Roseview Windows 2016 v1