HARD SURFACES

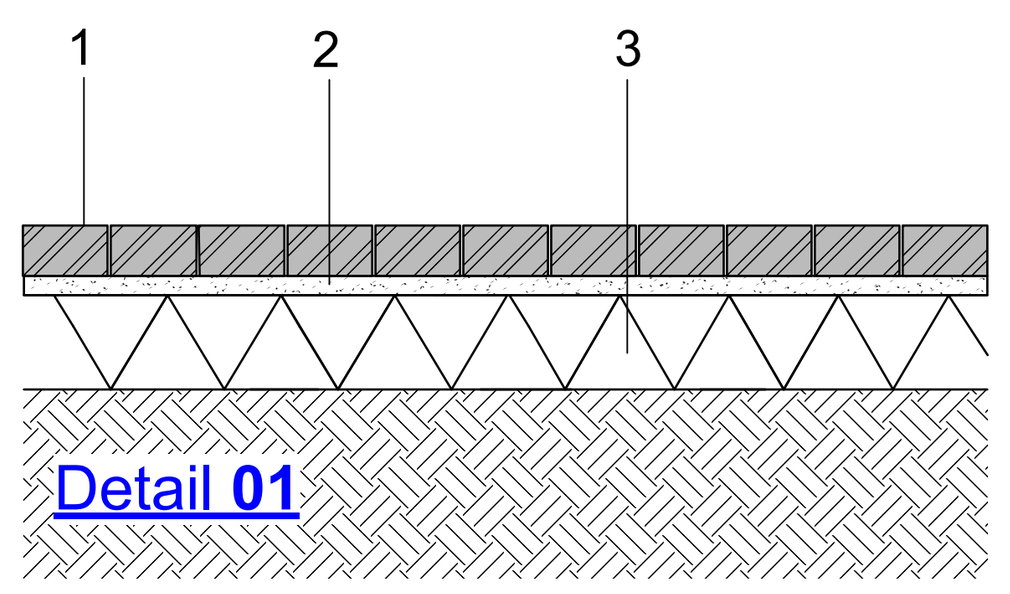

1. S4 Charcon Woburn Origional
Size:134x134x80mm
Colour:Graphite.

2. Unbound bedding aggregate to clause Q25 305J and jointing to Q25 295J.

3. Unbound road base and sub-base underneath to engineers details.

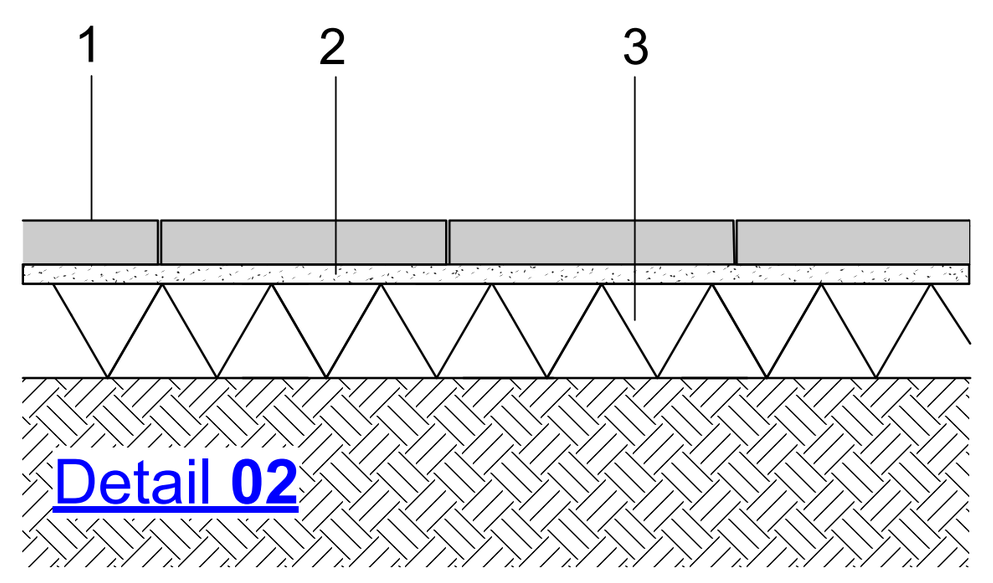

1. S3 Marshalls Perfecta Trafica Paving
Size: 450x450x70mm Colour: Natural grey.
Item code: FL4100750

2. Unbound bedding course to clause Q25 305J and jointing to Q25 295J.

3. Unbound road base and sub-base underneath to engineers details.

EDGE RESTRAINTS

K1 Road kerb: to be Exposed aggregate concrete Marshalls 'Conservation' kerb. Silver grey colour. 145mm W x 255mm D. Clause Q10/112J

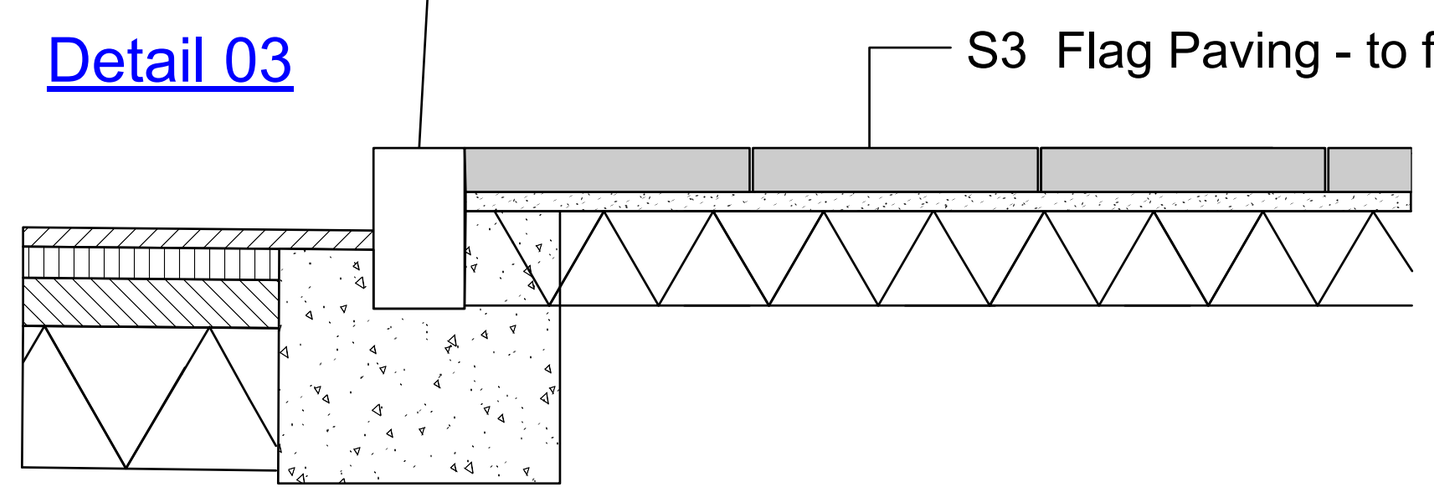

K2 Kerb to service yard. Standard precast concrete half-battered kerb, natural grey colour. Allow for drop kerb and other special units.

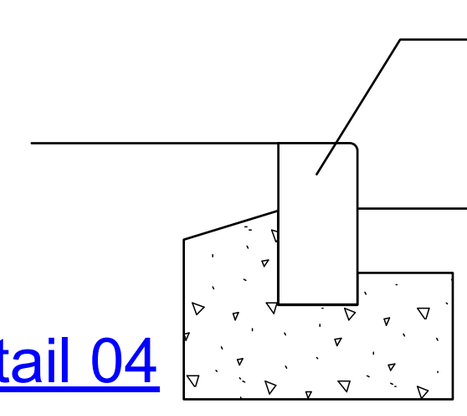

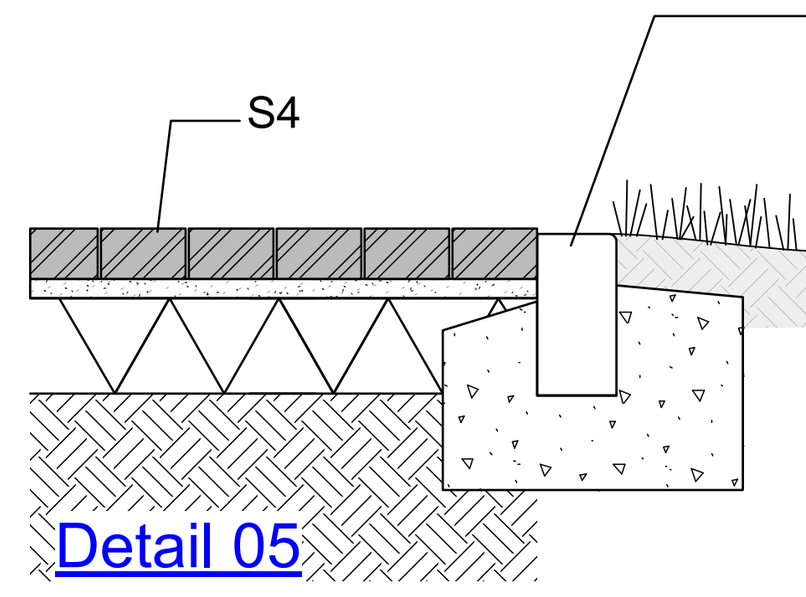

K7 Flush Concrete Kerb
to service access at the rear of the building.
BS standard 145mmW x 200mm D bullnosed kerb. Natural grey colour. Kerb to sit 5mm below the finished paving to ensure water runs off over the edge.

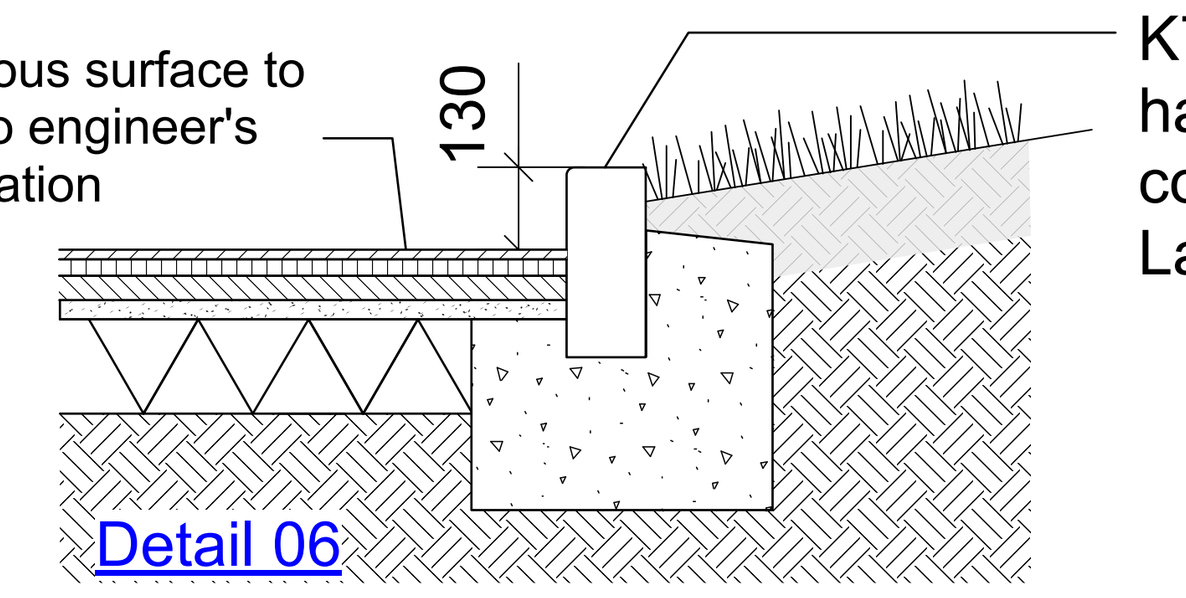

K7.1. Kerb/edge to trafficked hardstandings. Standard precast concrete bullnose kerb 145mm wide. Laid with upstand of 130mm

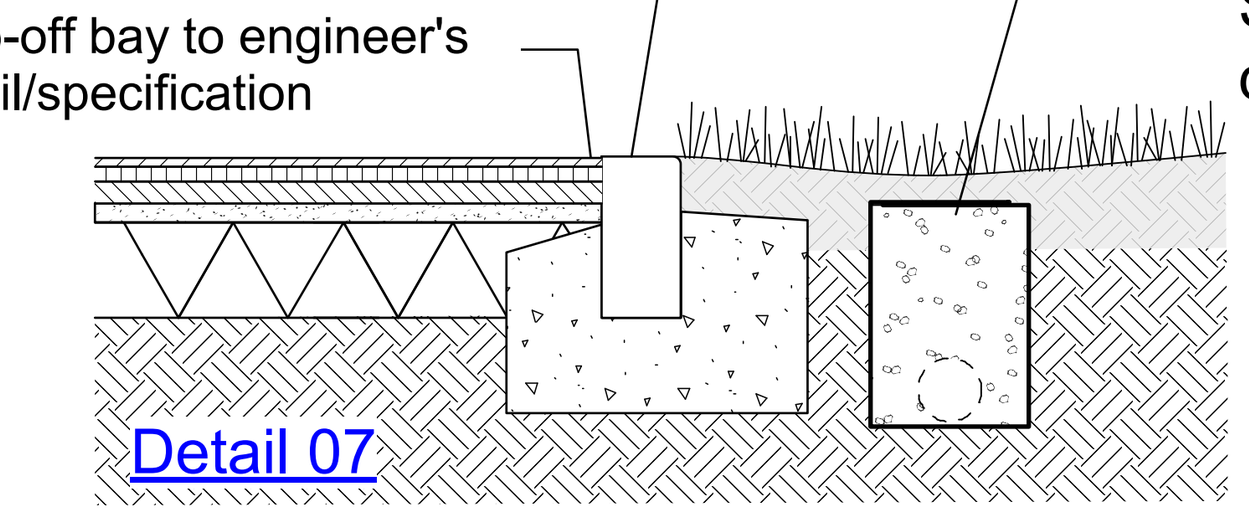

D13 French Drain - connection to SW sewage to civil engineer's design.

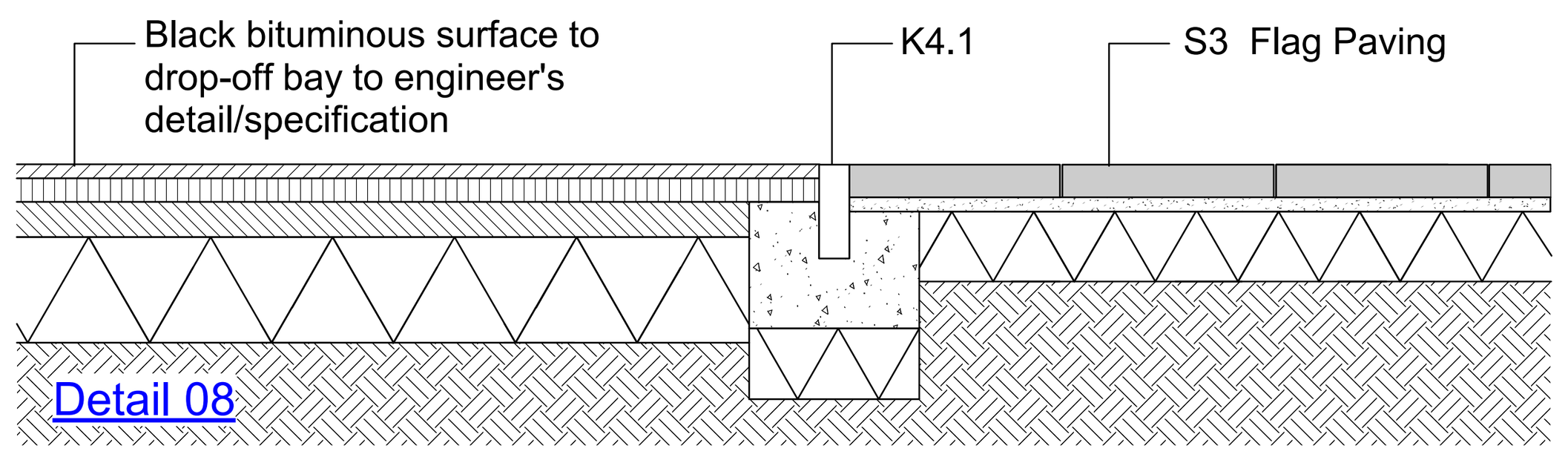

K4.1 BS standard pre-cast concrete edging. 50mm wide, 200mm deep, laid flush with adjacent black top and paving.

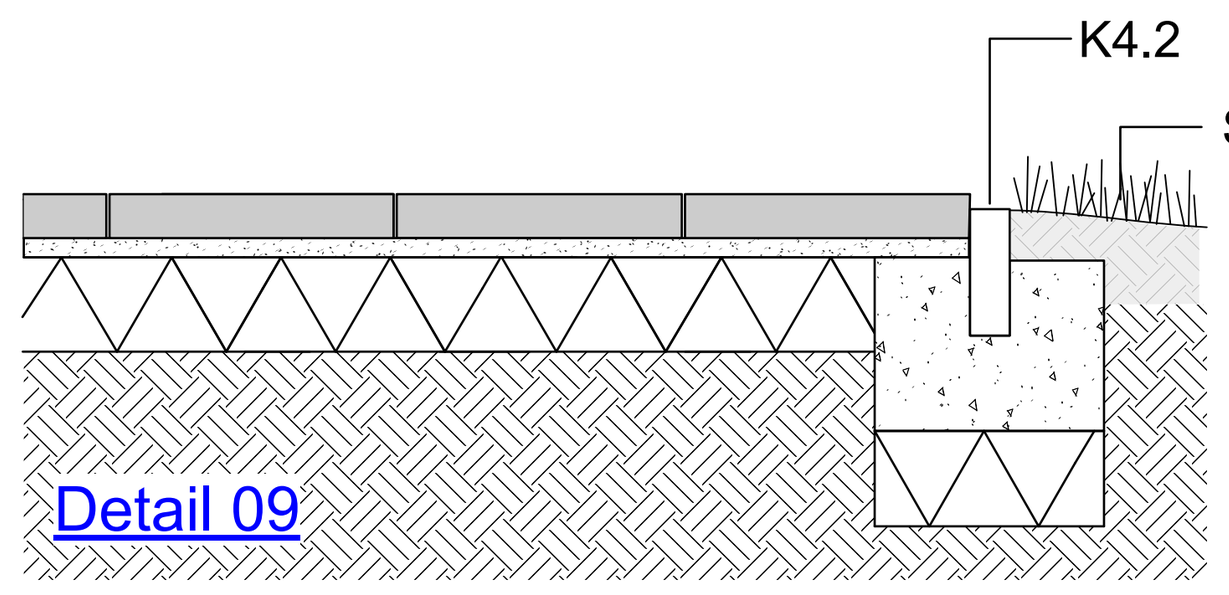

K4.2 BS standard pre-cast concrete edging. 50mm wide, 200mm deep, laid 25 below adjacent paving.

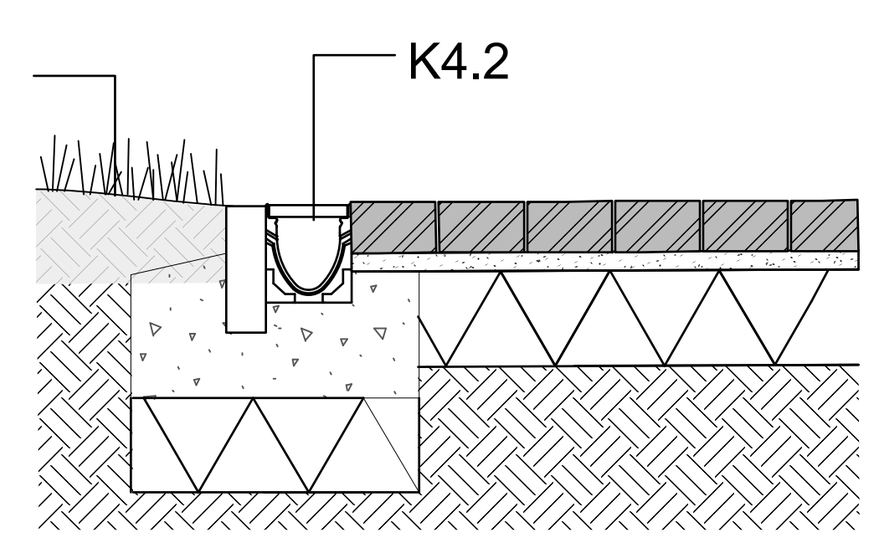

K4.2 BS standard pre-cast concrete edging. 50mm wide, 200mm deep, laid 25 below adjacent paving.

SITTING WALL

Stone aggregate reinforced lawn: Gritstone/sandstone or granite crushed 5-20mm gage aggregate mixed with topsoil (2:1). 150mm thick layer lightly compacted over lightly compacted unorganic sub-soil. With grass seeding.

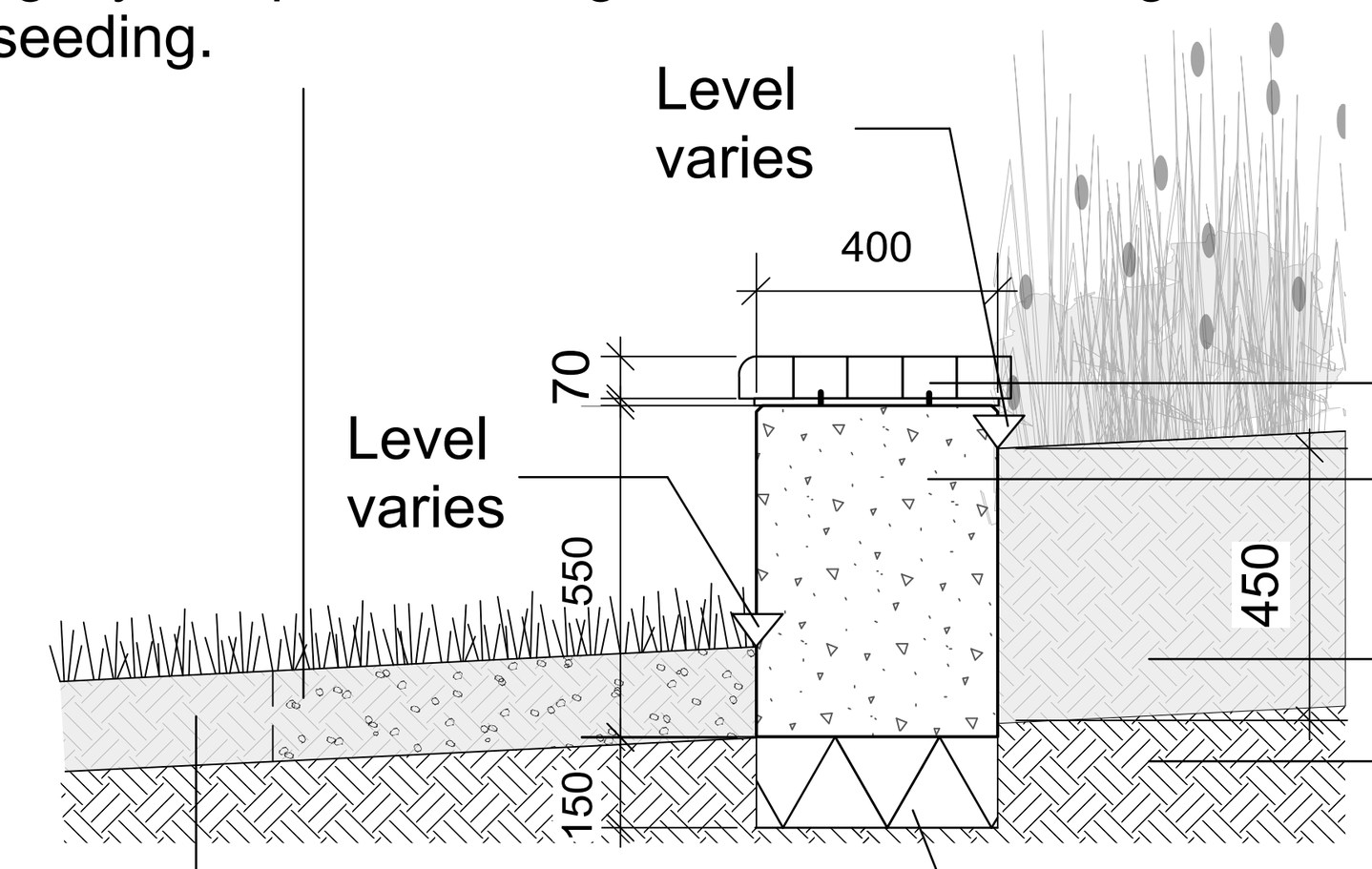

Timber Seating Top: Untreated 100% Hardwood (Cumaru FSC)
Slats Dimensions: 70 x 70 x 660 mm
External grade timber, all timber to have beveled edge and smooth to touch finish.
Mechanically fixed to flat bar steel frame using anti vandal concealed fixings to engineers specification.

K11 Sitting walls
Insitu concrete retaining edge (fairfaced) - Finished height vary: as shown on GA drawing 6241_PIE_00_ZZ_SI_AL_1102.

TopSoil backfill 450mm

Uncompacted backfill with existing sub-soil

Compacted DfT Type 1 unbound aggregate

Topsoil with grass seeding

LINEAR DRAINAGE

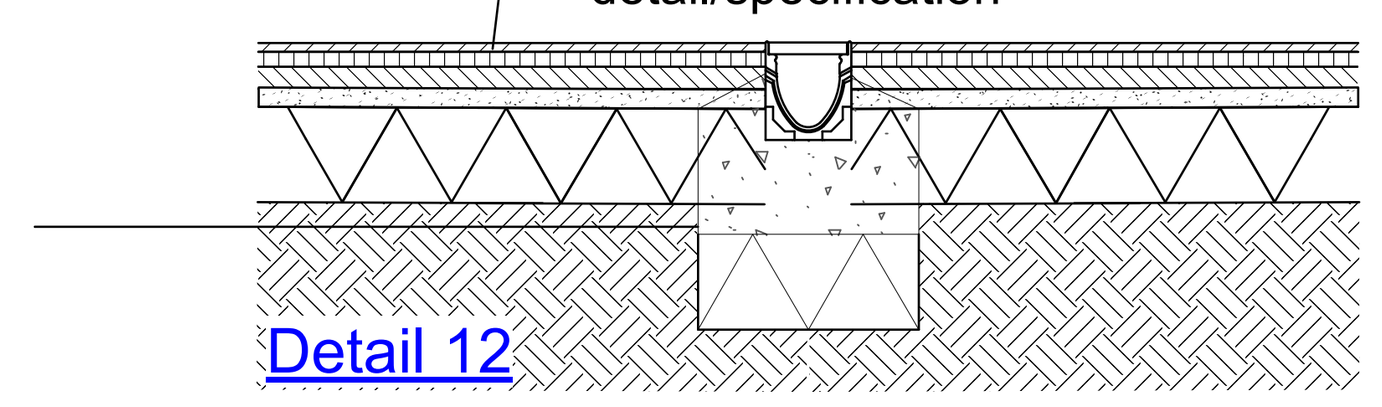

D11 Box drainage channel with grating: to be Aco Multidrain MD 100 with 'Heelguard' ductile iron grating or equal and approved. Load class D400.

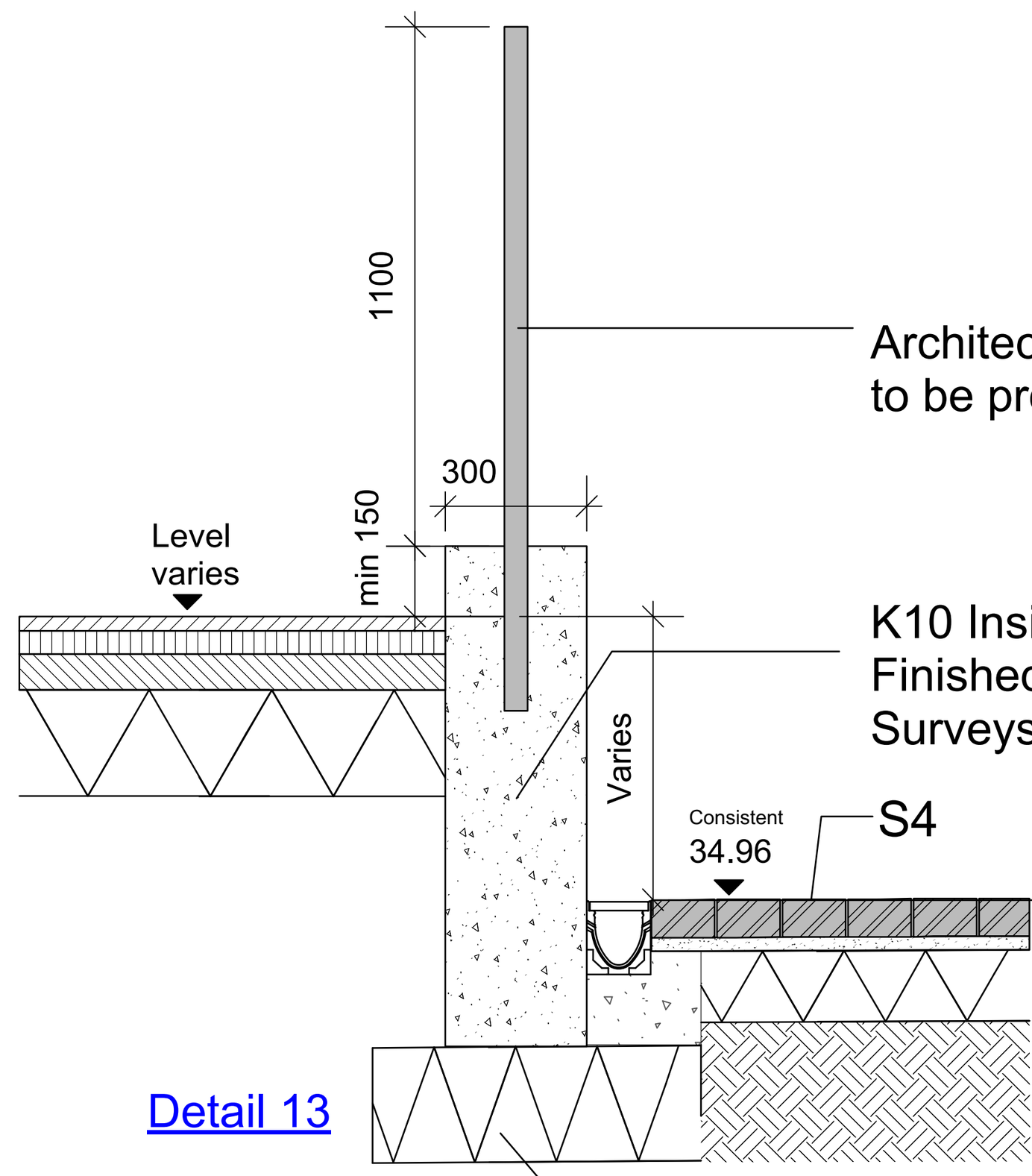

Architectural balustrade metalworks and fixings to be provided by RVA

K10 Insitu retaining wall (Fairfaced)
Finished height varies. Refer to Topographical Surveys of Cycleways.

D12 Box drainage channel with grating: to be Aco 'CivicDrain' 100 with 'Heelguard' composite grating or equal and approved. Load class C250.

Note:
Engineer to confirm structural design of wall.
Foundation to be design by engineers.

CYCLE STORAGE

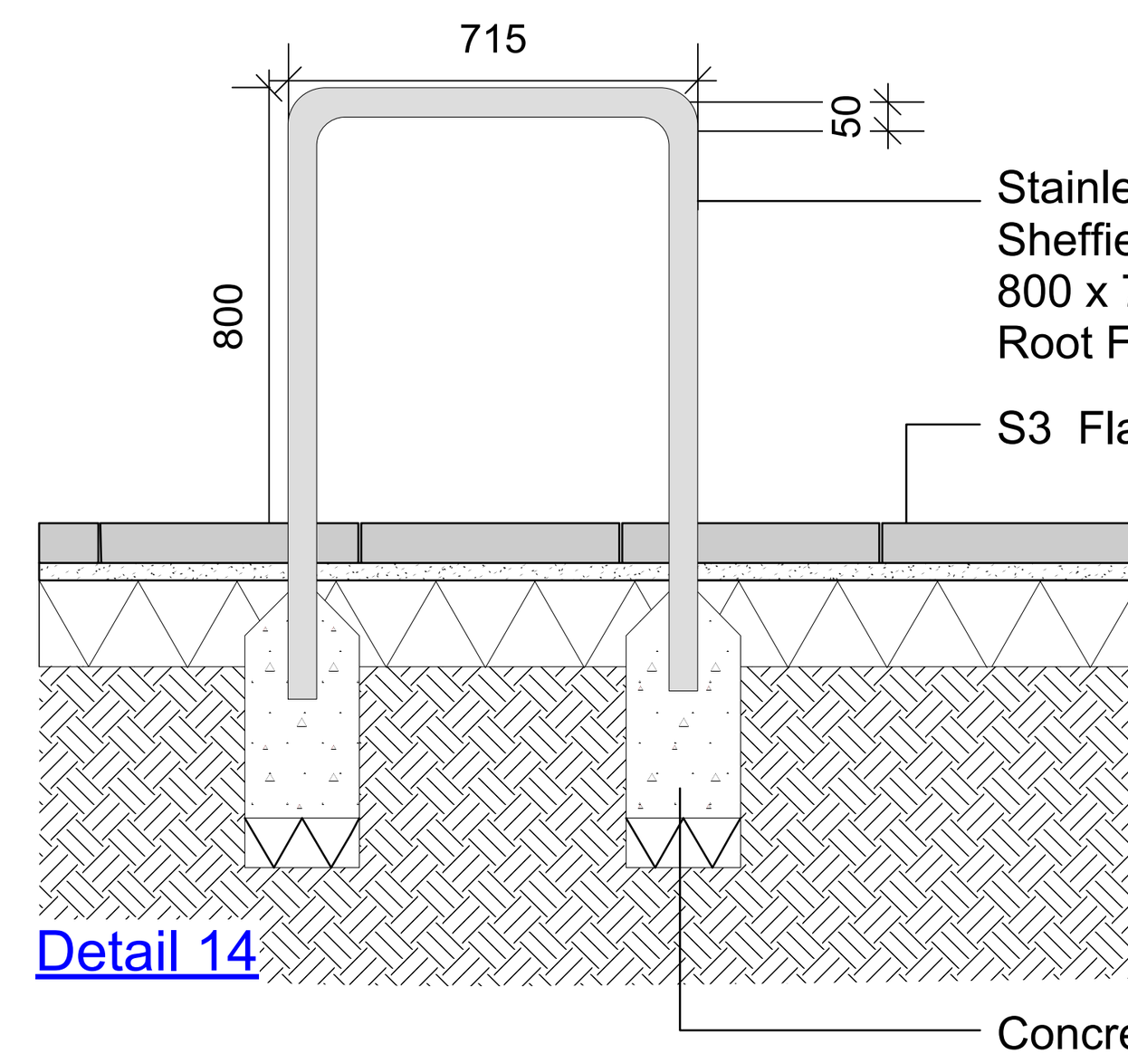

Stainless Steel
Sheffield Bicycle Stand
800 x 715 x 48.3 (mm)
Root Fixed.

S3 Flag Paving

Concrete foundations and footing (To Engineers Specification)



LOCATION PLAN (NTS)

NOTES

For all sub-surface construction design details and specification refer to the engineer's information.
Don't scale from the drawing, engineers' dimensions take precedence.
Please consult with us in case of inconsistencies with engineers' information.

Submit proposals and samples for all surface materials for approval prior to construction.

All drawings and details to be read in conjunction with the written NBS Specification clauses and any ambiguities to be raised with the landscape architect prior to construction:

F21 Natural stone/ashlar walling/dressings
L37 External stair, ramps, handrail and balustrades systems
Q10 Kerbs/ edgings/ channels/ paving accessories
Q15 Steps and Plinths
Q22 Asphalt roads/ pavings
Q25 Slab/brick/sett/cobble pavings
Q28 Topsoil and growing media
Q30 Seeding/turfing
Q31 External planting
Q35 Landscape maintenance
Q40 Fencing
Q50 Site/street furniture/equipment

KEY PLAN

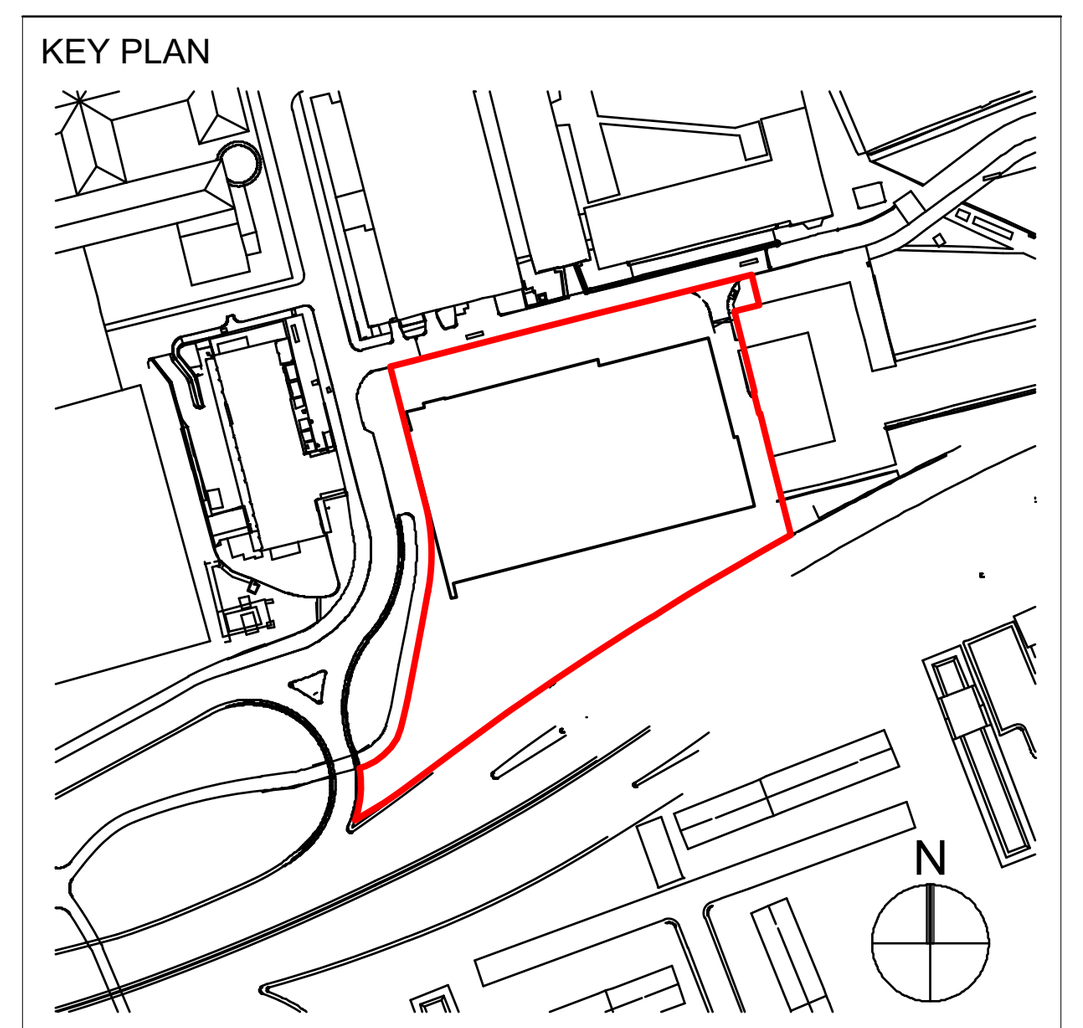

PROJECT NAME AND LOCATION:
GRAPHENE ENGINEERING INNOVATION CENTRE
THE UNIVERSITY OF MANCHESTER
MANCHESTER, M13 9PL

OWNER:
THE UNIVERSITY OF MANCHESTER
OXFORD ROAD, MANCHESTER, M13 9PL
TEL: +44 161 306 6000

PROJECT MANAGER / COST MANAGER:
EC HARRIS LLP
34 YORK WAY
LONDON, N1 9AB
TEL: +44 20 7812 2000

ARCHITECT OF RECORD:
RAFAEL VIÑOLY ARCHITECTS PC
2ND FLOOR, 84 SILK STREET, ANCOATS
MANCHESTER, M4 6BJ
TEL: +44 161 277 6800

CIVIL / STRUCTURAL ENGINEER:
RAMBOLL UK
3RD FLOOR, KINGS COURT, 2 - 4 EXCHANGE STREET
ST MARY'S GATE, MANCHESTER, M2 7HA
TEL: +44 161 827 1890

BUILDING SERVICES ENGINEER:
CH2M HILL
CITY PARK, 368 ALEXANDRA PARADE
GLASGOW, G31 3AU
TEL: +44 141 552 2000

LANDSCAPE ARCHITECT:
PLANIT
2 BACK GRAFTON STREET, ALTRINCHAM
CHESHIRE, WA14 1DY
TEL: +44 161 928 9281

REV	DESCRIPTION	DATE	DRWN	APRV
06	Stage 4 / D4 - Landscape Enhancements	23/02/18	KV	KR
05	Stage 4 / D4 - Suitable for Manufacture/Procurement	08/12/17	KV	KR
04	Stage 4 / D4 - Suitable for Manufacture/Procurement	25/09/17	JD	KR
03	Stage 4 / D2 - Suitable for Tender	25/02/16	JV	KR
02	Stage 4 / D2 - Suitable for Tender	08/01/16	SAB/JD	KR
01	Stage 4 / D2 - Suitable for Tender	11/12/15	SAB	KR

DRAWING ORIGINATOR:
Planit - IE LLP
2 Back Grafton St Altrincham WA14 1DY
0161 928 9281
18 Bowling Green Lane London EC1R 0BW
020 7430 0754

WORKS: LANDSCAPE PROPOSALS

DRAWING TITLE:
PAVING AND EDGING DETAILS

DATE: 08/01/2016 SCALE: 1:25 SIZE: A1

DRAWING NUMBER / FILE NAME:
6241_PIE_00_ZZ_DA_AL-40101

STAGE: 4 REV: 06

DISCLAIMER:
THE ARCHITECT SHALL HAVE NO RESPONSIBILITY FOR ANY LIABILITY, LOSS, COST, DAMAGE OR EXPENSE ARISING FROM OR RELATING TO ANY USE OF THIS DOCUMENT FOR ANY PURPOSE OTHER THAN ITS INTENDED PURPOSE ON THIS PROJECT. THIS DOCUMENT IS PROTECTED BY COPYRIGHT.
THIS DOCUMENT IS TO BE CONSIDERED IN CONJUNCTION WITH ALL RELATED DOCUMENTATION.
ANY DISCREPANCIES IDENTIFIED IN THIS DOCUMENT MUST BE REPORTED IMMEDIATELY TO THE ARCHITECT OF RECORD BEFORE PROCEEDING.
CONTRACTORS MUST VERIFY ALL DIMENSIONS PRIOR TO PROCEEDING WITH ANY WORK. ONLY FIGURED DIMENSIONS ARE TO BE USED FOR VERIFICATION.

DOCUMENT STATUS: D4 - Suitable for Manufacture/Procurement

The University of Manchester