HERON HOUSE.
SCAFFOLD PROPOSAL

BRAZENNOSE ST.

HOARDING ARRANGEMENT SHOWN SEPERATELY

GANTRY FOR MATERIAL STORAGE ABOVE GROUND LEVEL.

HOARDING ARRANGEMENT SHOWN SEPERATELY

LINCOLN SQ.

ALBERT SQ.

LLOYD ST

GANTRY FOR MATERIAL STORAGE ABOVE GROUND LEVEL.

GANTRY FOR MATERIAL STORAGE ABOVE GROUND LEVEL.

← HOARDED IN SCAFFOLD TOWERS IN FRONT OF EACH COLLONADE COLUMN PROJECTION FROM FACE 1850MM TO WIDTH OF COLUMN. ACCESS INTO COLONNADE OPENINGS CLEAR TO 2.7m HIGH.

↔ – WALK THROUGH SCAFFOLD PROJECTION 1850MM FROM THE BUILDING.

– LADDER BEAM BRIDGE TO GIVE CLEAR ACCESS.

GANTRIES IN PLACE FOR ERECTION & DISMANTLE PERIOD ONLY.

Station	Easting	Northing	Level
1	383759.038	398101.315	38.928
2	383737.551	398101.128	37.117
3	383728.084	398066.204	38.339
4	383771.233	398067.861	40.001
5	383765.773	398063.323	39.967

398120N
398100N
398080N
383680E
383780E

HERON HOUSE
HOARDING PROPOSAL

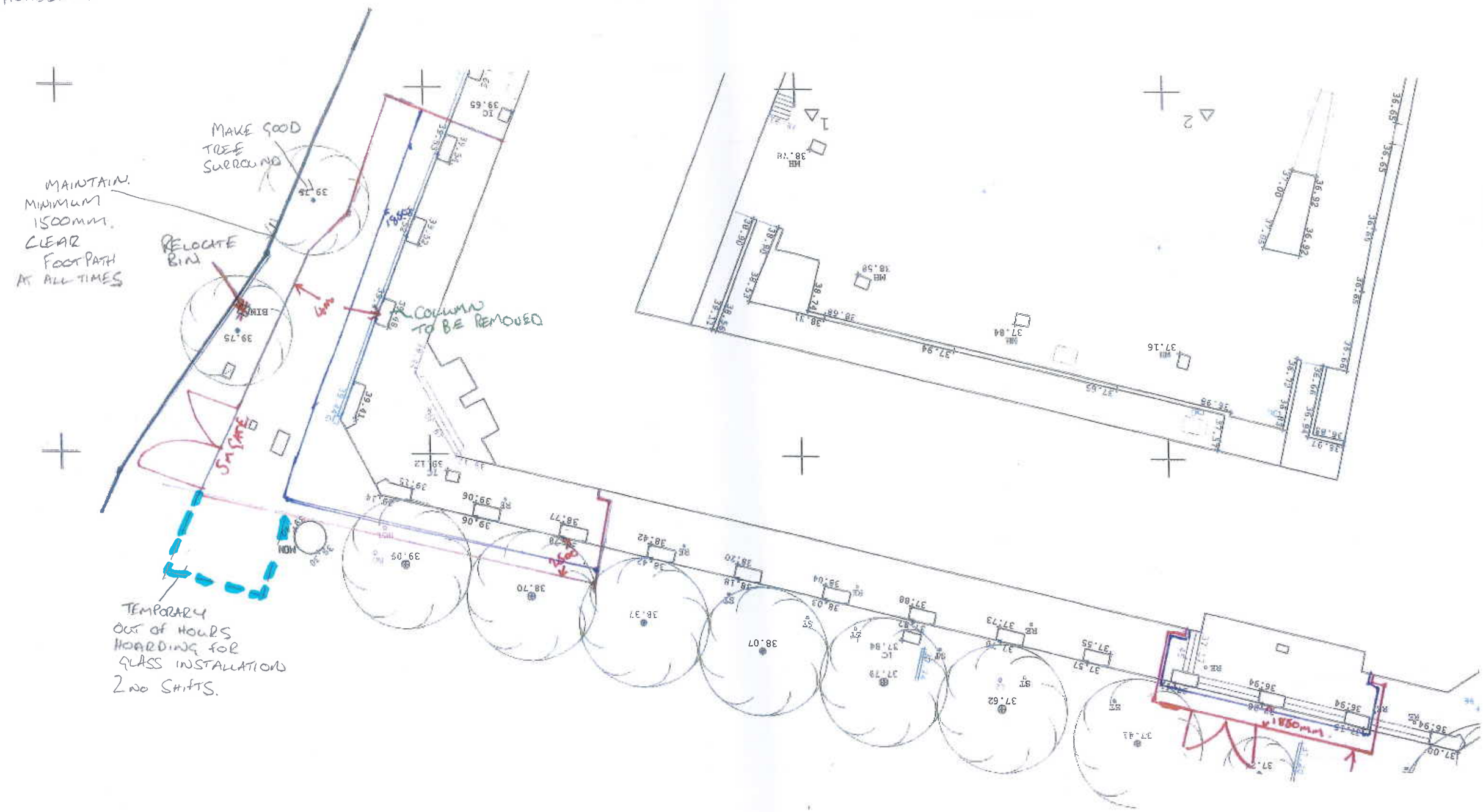

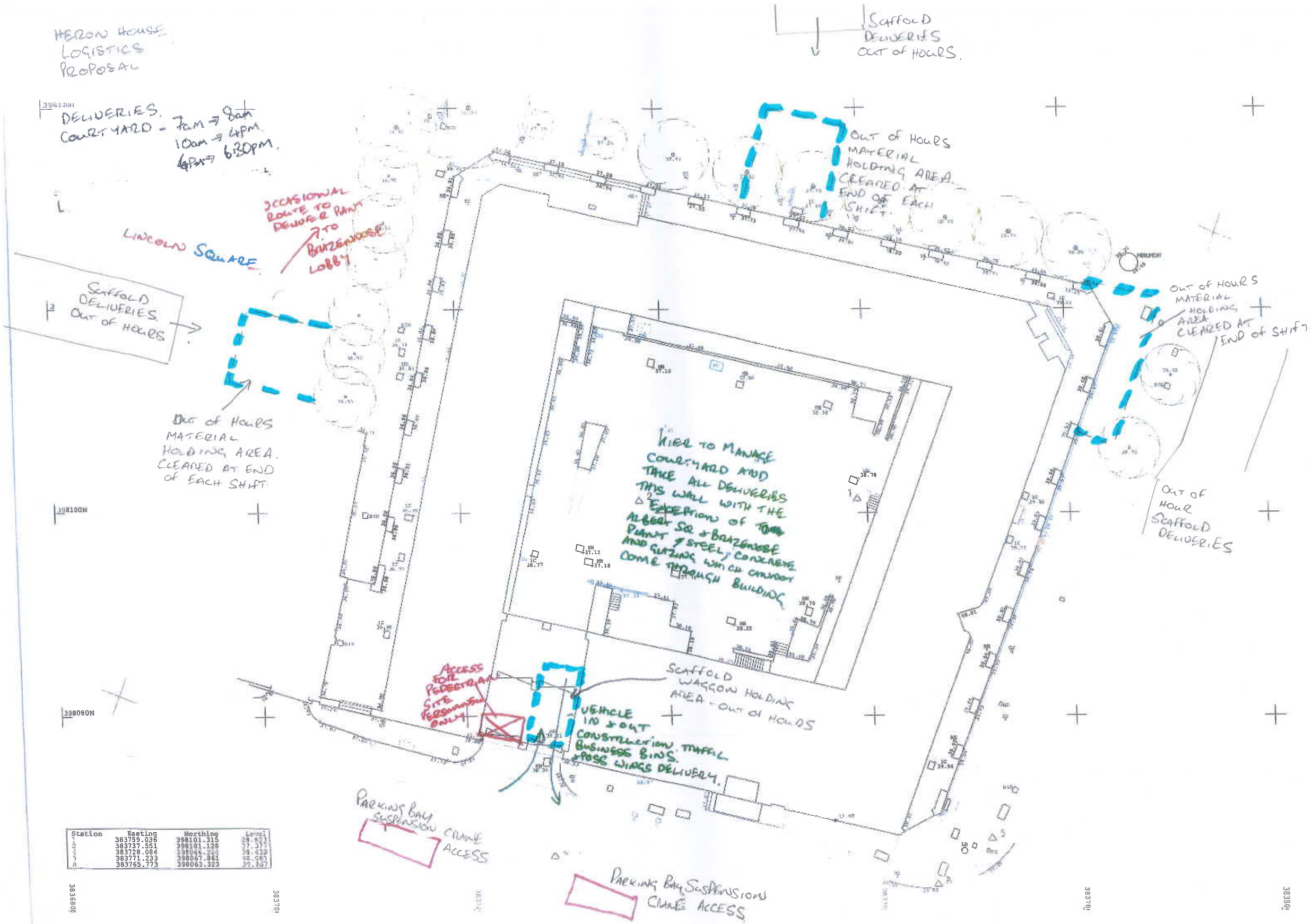

Station	Easting	Northing	Level
1	383759.036	398101.315	[illegible]
2	383737.551	398101.128	[illegible]
3	383728.084	398066.204	38.439
4	383771.233	398067.861	[illegible]
5	383765.773	398063.323	[illegible]