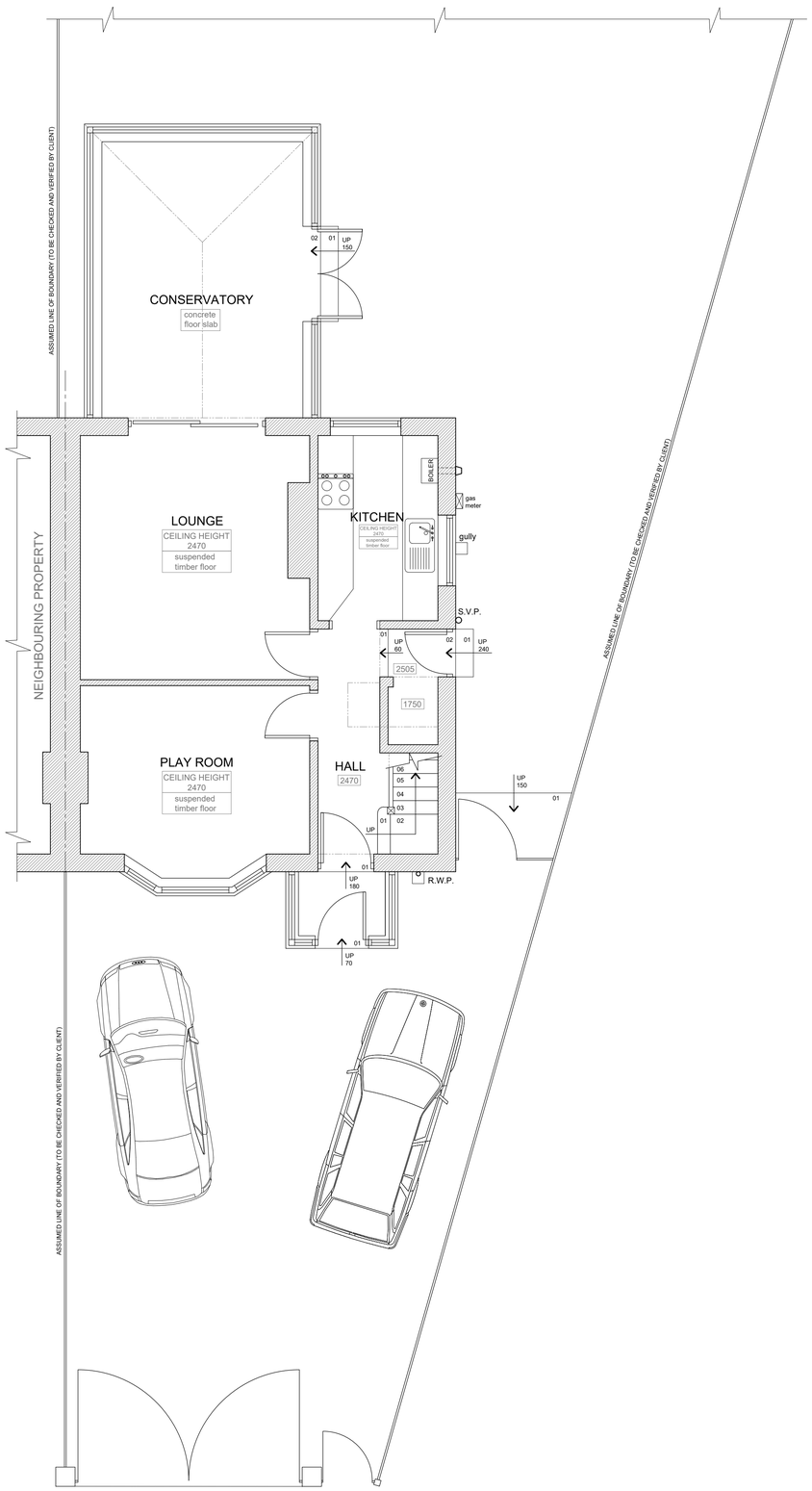


EXISTING GROUND FLOOR PLAN

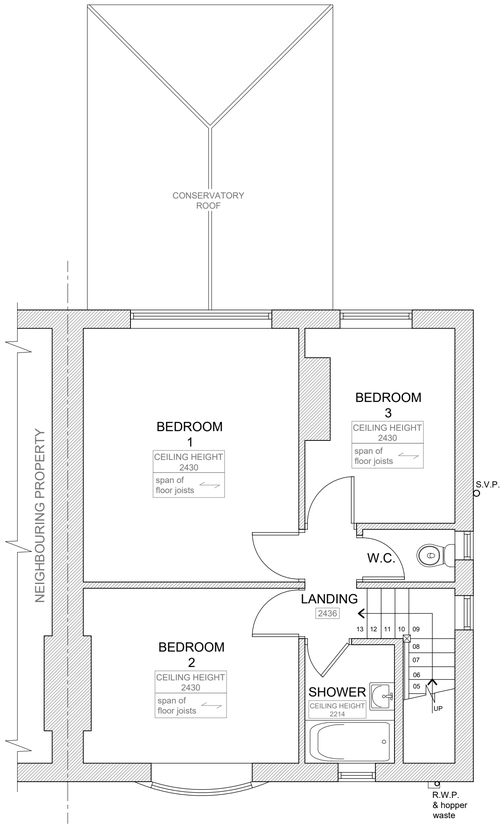


EXISTING FIRST FLOOR PLAN

## KEY TO WALL CONSTRUCTION

Masonry construction wall (contractor to check on site to confirm if load bearing before carrying out any demolition works).

Assumed non-loadbearing stud partition wall (contractor to check on site to confirm before carrying out any demolition works).
It should be noted that some walls may appear to be stud partiton , but are masonry walls with plasterboard on dabs.

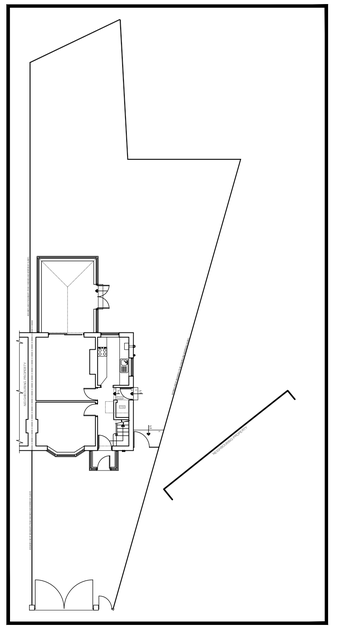

SITE/ BLOCK PLAN
(SCALE 1:200)

**client**

MR & MRS A. BONE

**project**

PROPOSED
HOUSE EXTENSION
14 MAYCROFT AVENUE
MANCHESTER
M20 4XX

**drawing**

EXISTING PLANS,
SITE PLAN/ BLOCK PLAN

**drawing no**

BON/18/01

**scale**

1:50, 1:200

**date**

MAY18

**drawn by**

s.p.o.

The copyright in all drawings, specifications and documents prepared by the designer and in the work executed from them shall remain the property of the designer.
Do not scale from the drawing. Work to figured dimensions. Check all dimensions on site, in the event of discrepancy, refer to the designer

design solutions architecture Ltd
50A Park Lane, Poynton
Cheshire SK12 1RE
t. 01625 263577
designsolutions.org.uk