

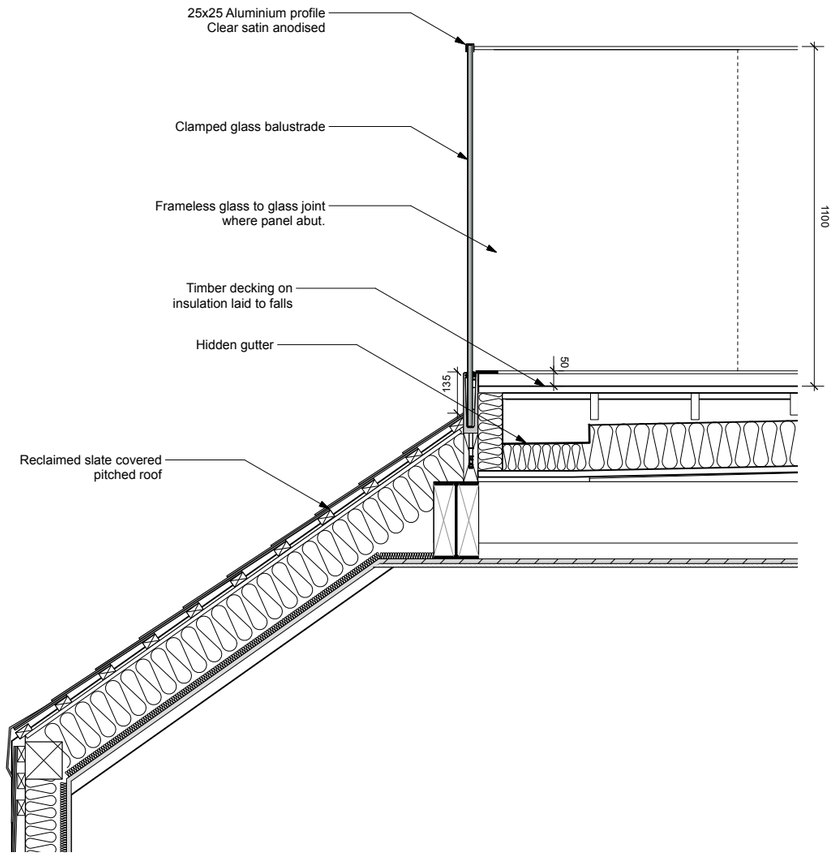




**PROPOSED CROSS SECTION THROUGH ROOF WITH BALUSTRADE**
1:10 @ A1

BALUSTRADE EXAMPLE

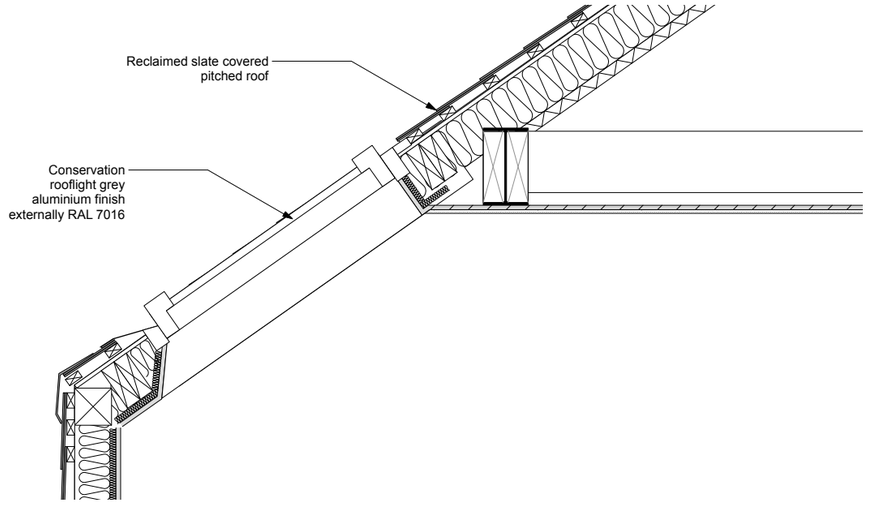




**PROPOSED CROSS SECTION THROUGH ROOF WITH ROOFLIGHT**
1:10 @ A1

CONSERVATION ROOFLIGHT EXAMPLE

# CONSTRUCTION

**IMPORTANT NOTES:**

**TO BE READ IN CONJUNCTION WITH RELEVANT STRUCTURAL ENGINEERS DRAWINGS.**

**DO NOT SCALE FROM DRAWING, WORK TO FIGURED DIMENSIONS ONLY. ALL DIMENSIONS TO BE CHECKED BY CONTRACTOR/FABRICATOR PRIOR TO CONSTRUCTION. REPORT ALL DISCREPANCIES TO THE ARCHITECT.**

**ANY EXISTING DIMENSIONS NOTED ON THE DRAWING ARE TO BE CHECKED BY THE CONTRACTOR PRIOR TO COMMENCEMENT OF THE WORKS.**

| REVISION | DATE | DESCRIPTION |
|---|---|---|
| B | 10/05/18 | GLASS BALUSTRADE ADDED |
| A | 20/02/18 | ANNOTATIONS ADDED |

**CLIENT:** OSA

**PROJECT:** PROPOSED CONVERSION OF OFFICE SPACE INTO 4no TOWNHOUSES

**ADDRESS:** 40 KING STREET

**DRAWING TITLE:** PROPOSED ROOF DETAILS

**SCALE:** 1:10@A1 **DATE:** FEB 2018

**DRAWING NO:** A245_C_954

**OLLIER SMURTHWAITE** ARCHITECTS
106 Albert Mill, 10 Hulme Hall Road, Manchester, M15 4LY
T 0161 883 0838
F 0161 883 0839
E mail@olliersmurthwaite.com