"bronze" planters

"bronze" Glazed panel door

bronze coloured louvre planel

black brick (flemish bond to louvre panels)

"bronze" fixed glazing

"bronze" balcony

black brick (soldier course)

black brick (running bond)

generic brand

"bronze" fixed glazing

"bronze" Glazed panel door

window graphic to tennents design

0 2.0 3.0 4.0 5.0 M

FOR DISCUSSION

project:	SALMON STREET
dwg no:	220.A
dwg title:	SHUDE HILL ELEVATION
scale:	1:50 @A2
date:	2018.05.16

snookarchitects

10 Duke street
Liverpool
L1 5AS

t: 0151 707 0100

do not scale from this drawing
all dimensions are to be checked on site prior to commencing works on site. discrepancy found between information given on this drawing and that given elsewhere or recorded on site shall be notified immediately to the project architect in writing

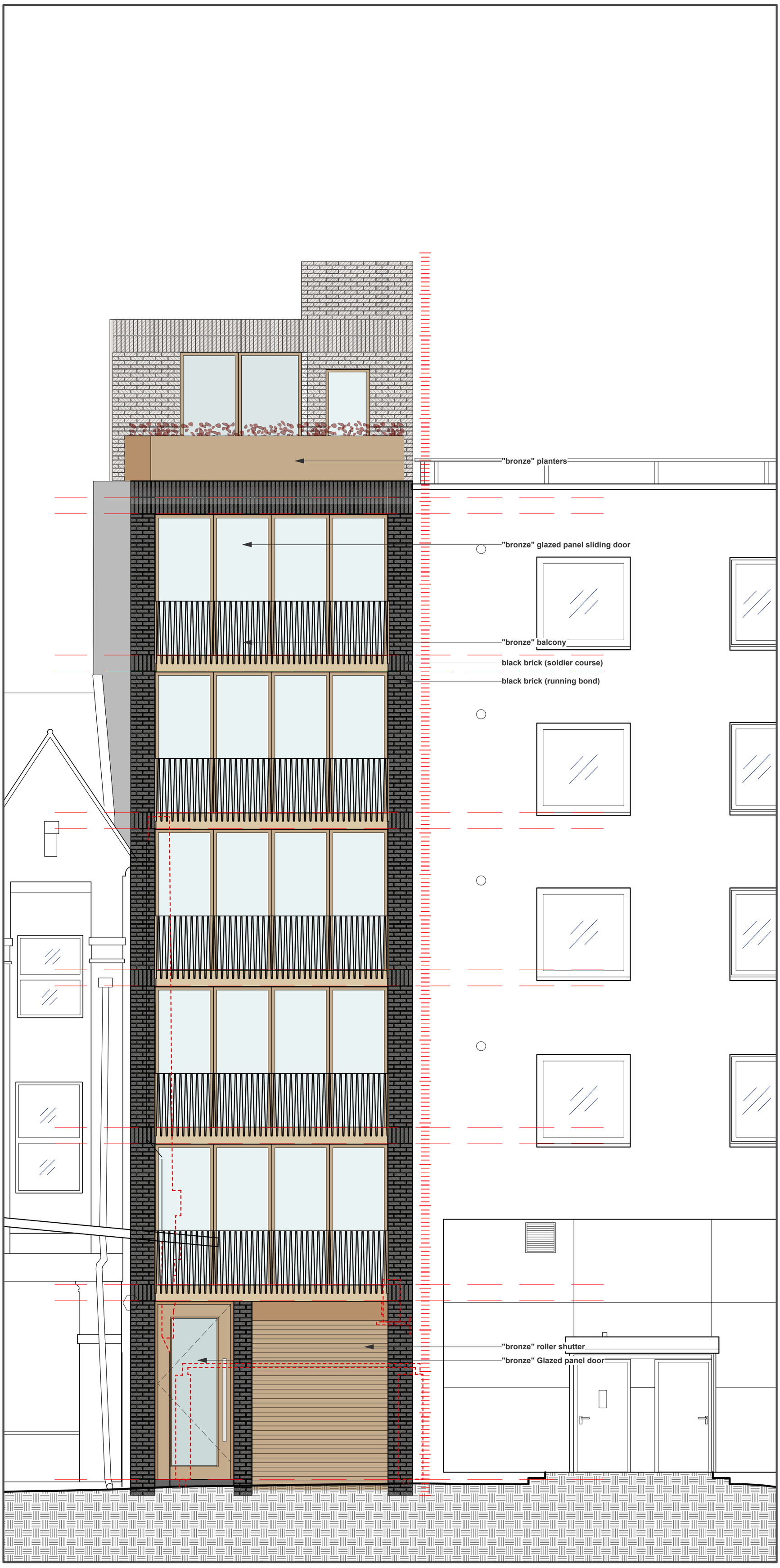

0 2.0 3.0 4.0 5.0 M

FOR DISCUSSION

project:	**SALMON STREET**
dwg no:	**221.A**
dwg title:	**SALMON STREET ELEVATION**
scale:	**1:50 @A2**
date:	**2018.05.16**

snookarchitects

10 Duke street
Liverpool
L1 5AS

t: 0151 707 0100

do not scale from this drawing
all dimensions are to be checked on site prior to commencing works on site. discrepancy found between information given on this drawing and that given elsewhere or recorded on site shall be notified immediately to the project architect in writing

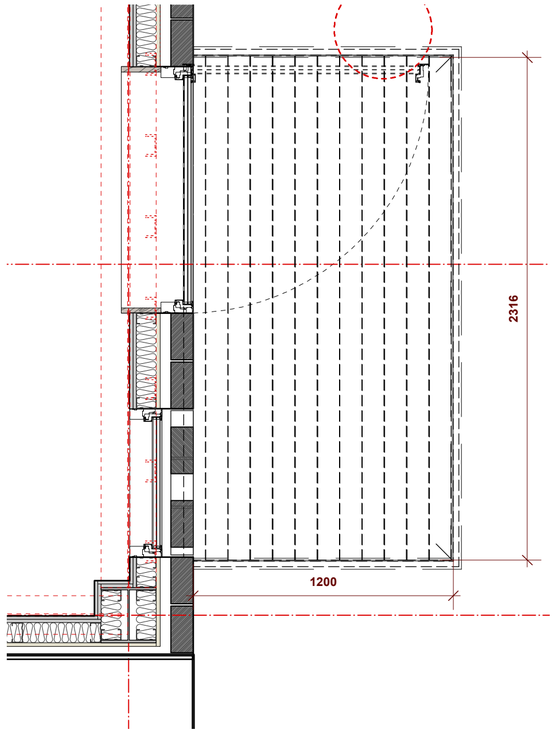

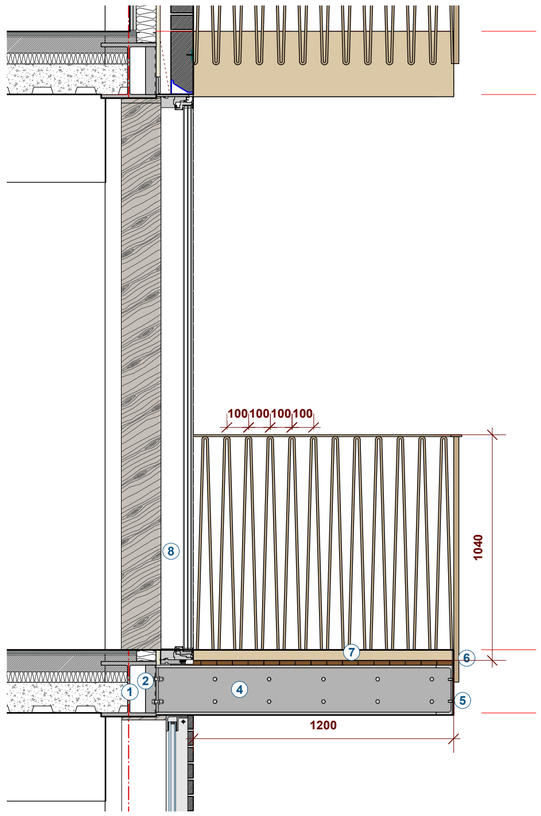

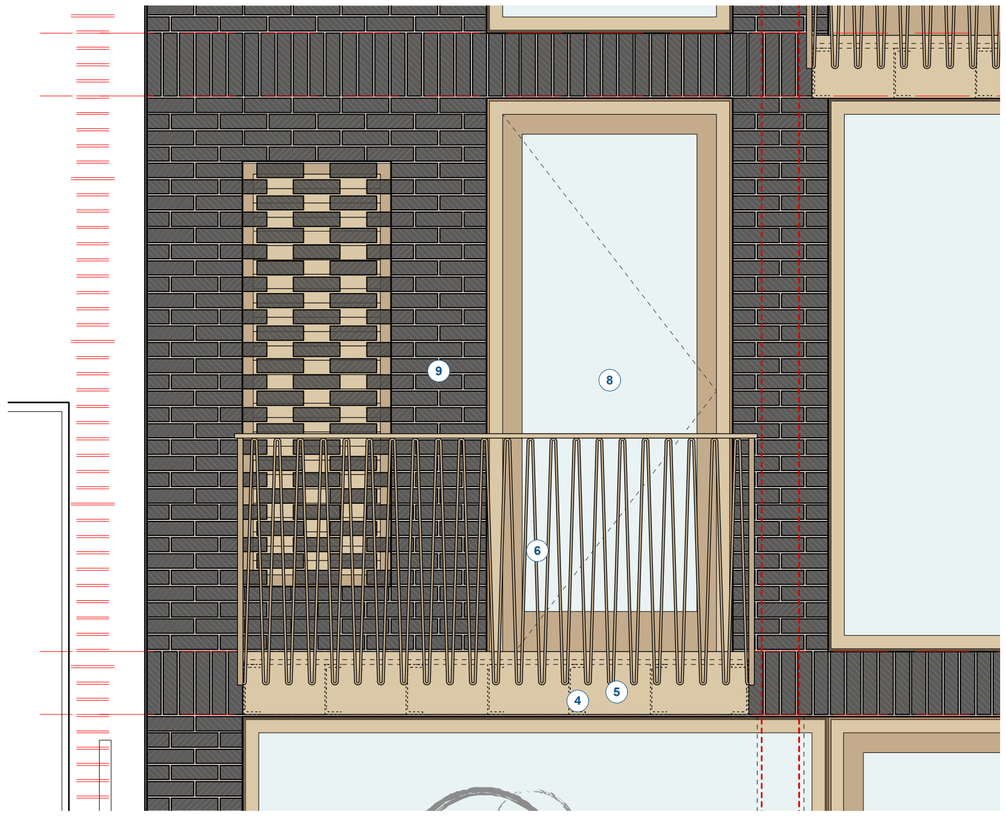



KEY
1• 254x254 UC TO ENG SPECIFICATION
2• 100x50 PFC WELDED BETWEEN FLANGE
3• 150x150 RSA CONTINIOUSLY WELDED TO PFC
4• 230x90 PFC
5• 10mm PLATE
6• 10x25mm BAR BENT TO SHAPE
7• COMPOSITE DECKING
8• WINDOW SYSTEM
9• BLACK BRICK

0 1 2 2 M

FOR DISCUSSION

project:	SALMON STREET
dwg no:	230.A
dwg title:	BALCONY DETAIL
scale:	1:20 @A2
date:	12.06.2018

snookarchitects
10 Duke street
Liverpool
L1 5AS
t: 0151 707 0100

do not scale from this drawing
all dimensions are to be checked on site prior to commencing works on site. discrepancy found between information given on this drawing and that given elsewhere or recorded on site shall be notified immediately to the project architect in writing

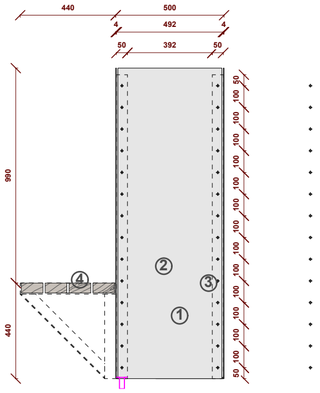

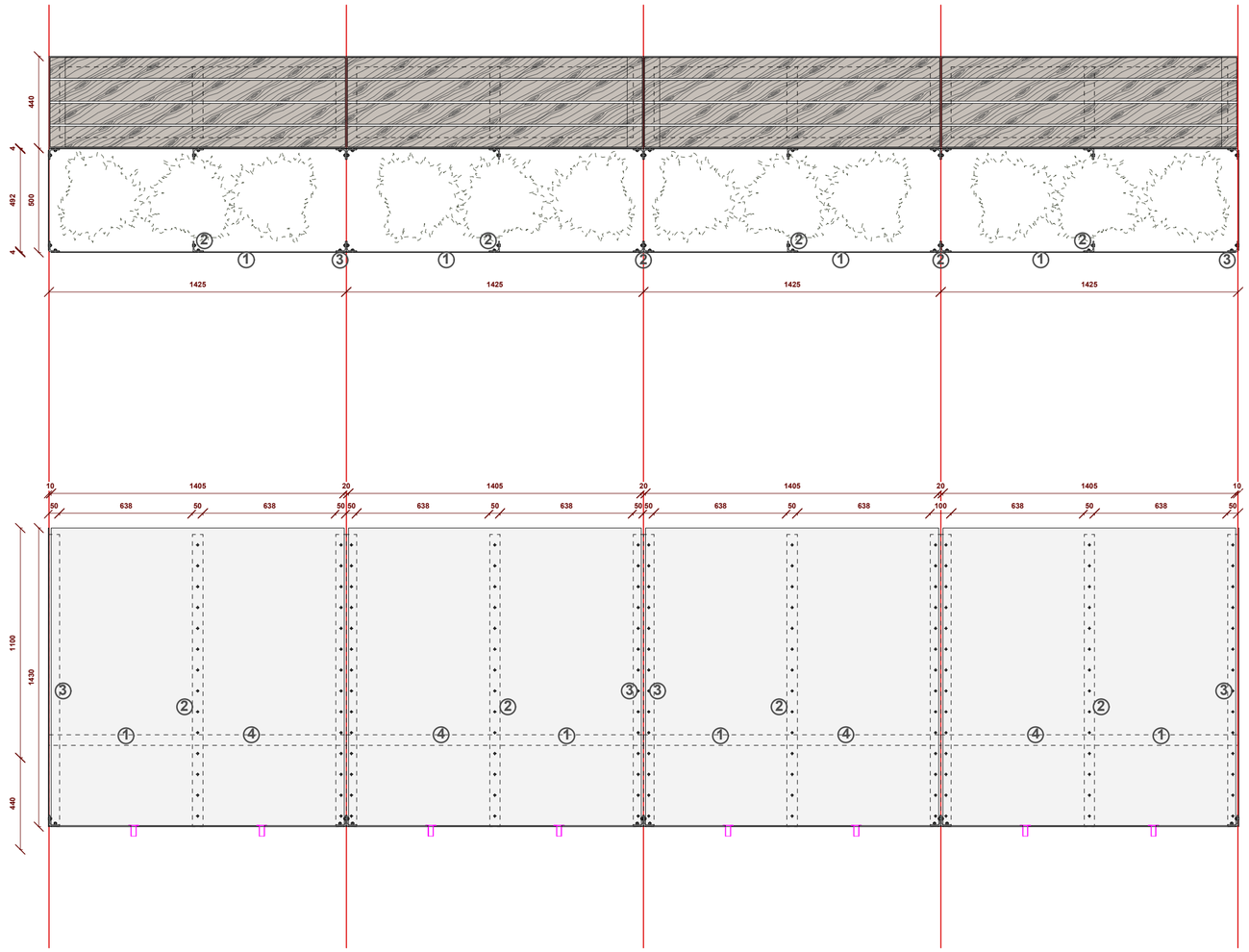

PLANTER KEY
1• 4mm plate painted bronze REF XXX
2• 50x50 RSA
3• M8 countersunk hex drive bolt
4• 100x47mm timber - with three coats of osimo UV oil

0 1 2 2 M

FOR DISCUSSION

project:	**SALMON STREET**
dwg no:	**232.A**
dwg title:	**PLANTER DETAILS**
scale:	**1:20 @A2**
date:	**12.06.2018**

snookarchitects

10 Duke street
Liverpool
L1 5AS

t: 0151 707 0100

do not scale from this drawing
all dimensions are to be checked on site prior to commencing works on site. discrepancy found between information given on this drawing and that given elsewhere or recorded on site shall be notified immediately to the project architect in writing