GE
Lighting

WORLDWIDE PARTNER



DATA SHEET

# ALIx

RAL9007 | IP66 | IK08 | 9 KG | CLASS II | CLASS I | CE

## Product information

The ALIx LED outdoor luminaire delivers outstanding features, style and attractive form factor. This latest design offers excellent efficacy even at higher lumen outputs to meet a wide range of area lighting needs. Using reflective optic technology, GE offers superior horizontal and vertical illuminance with high uniformity, while minimizing glare as fixture lumens increase. This system delivers unusually low perceived glare when viewed from beneath the fixture near nadir. The ALIx provides reduced energy consumption, combined with a long rated life that virtually eliminates ongoing maintenance expenses, enabling significant operating cost benefits over the life of each fixture.

## Application areas

- Car parks
- Shopping centres
- Pedestrian crossings
- Industrial & logistical areas

## Structures and materials

**Housing material:** die cast aluminium
**Optical material:** highly reflective aluminium coated plastic
**Optical cover:** tempered glass
**Default colour:** RAL9007

## Performance*

**Luminous flux:** from 3200 to 16 200 lm
**Luminaire efficacy:**
- Up to 132 lm/w at 3000K (warm white)
- Up to 135 lm/w at 4000K (neutral white)
- Up to 141 lm/w at 5000K (cold white)

**Projected lumen maintenance:** L80 > 100 000 hours
**Rated median useful life and the associated rated LM factor L90 (6K)*:** >36 000 hours
**Rated abrupt failure value*:** 2.469%
**Lumen maintenance code:** 9
**Rated ambient temperature (tq) related to performance for a luminaire*:** 25°C

*Definitions and tolerances according to IEC62722-2-1:2014

## Optics

Wide range of asymmetrical and symmetrical photometric distributions available optimized for area lighting, flood lighting, and low-traffic roadways.
**Colour rendering index:** >70
**Available colour temperatures:** 3000K, 4000K, and 5000K
ULOR = 0% if mounted horizontally

## Electrical

**Dimming:** DALI
**Input voltage and frequency**: 220-240 V, 50-60 Hz
Class I and Class II available
**Surge protection:** 8/10 kV option available
**Input power (nominal):** 32 W to 140 W

GE imagination at work

## Structures and materials

**Housing material:** Die cast aluminium
**Optical material:** Highly reflective aluminium coated plastic
**Optical cover:** Tempered glass
**Default colour:** RAL9007

## Installation and maintenance

**Mounting options:** 60 mm arm-mount or adjustable stirrup
**Weight:** 9 kg, depending on options
**Recommended mounting height:** 8-15 m
Tool-less driver maintenance
**Ambient temperature from -40°C to +50°C**
**Storage temperature up to 80°C**

## Standards and regulations

CE, ENEC, Directive 2004/108/EC, 2006/95/EC, 2009/125/EC, 1194/2012/EU, 2011/65/EC, EN 60598, EN 62471, EN 55015, EN 61000, EN 62493, EN 61547

## Other options available

Passive infrared motion sensor
Other RAL colours available on request

## Typical photometrical features

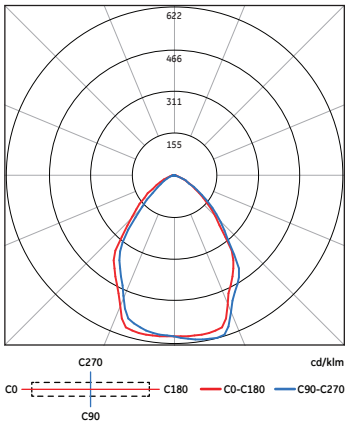

Symmetric Wide Flood

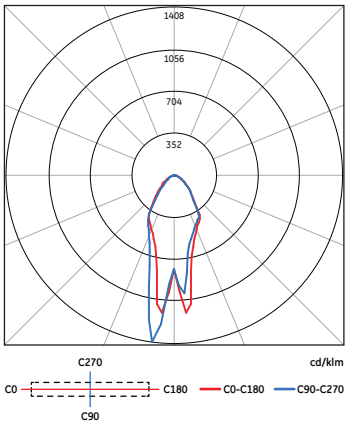

Symmetric Narrow Spot

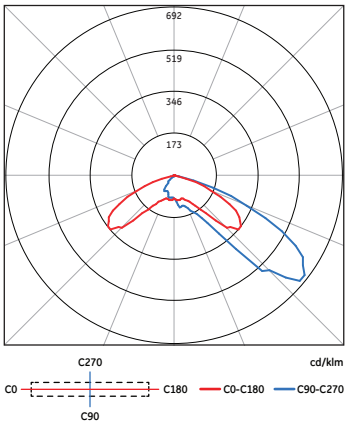

Asymmetric Wide

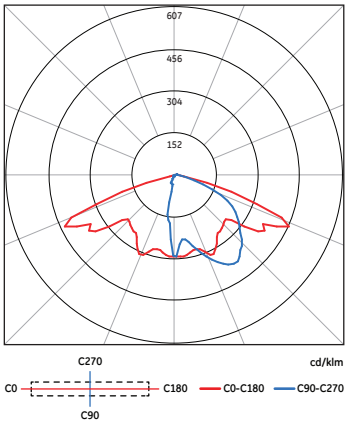

Asymmetric Narrow

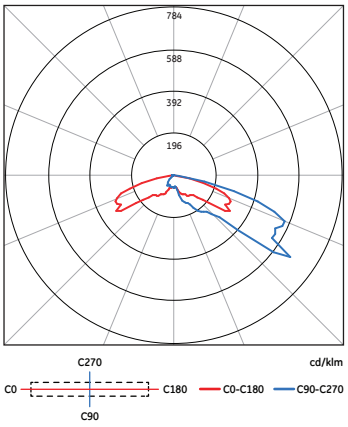

Asymmetric Forward

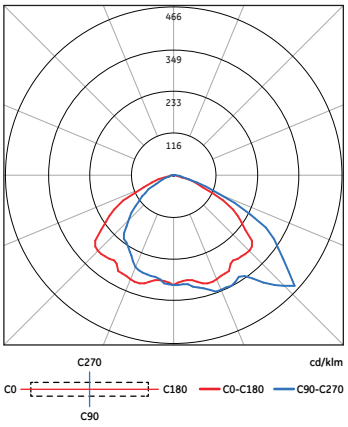

Asymmetric Extra Wide Flood

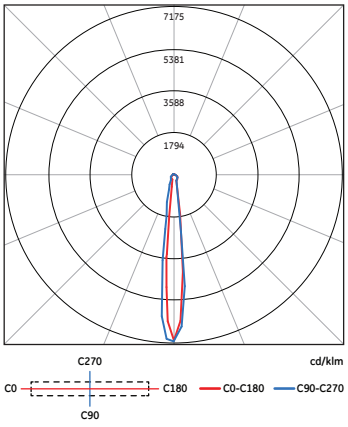

Asymmetric Forward Throw Flood

# Dimensions

## With coupler

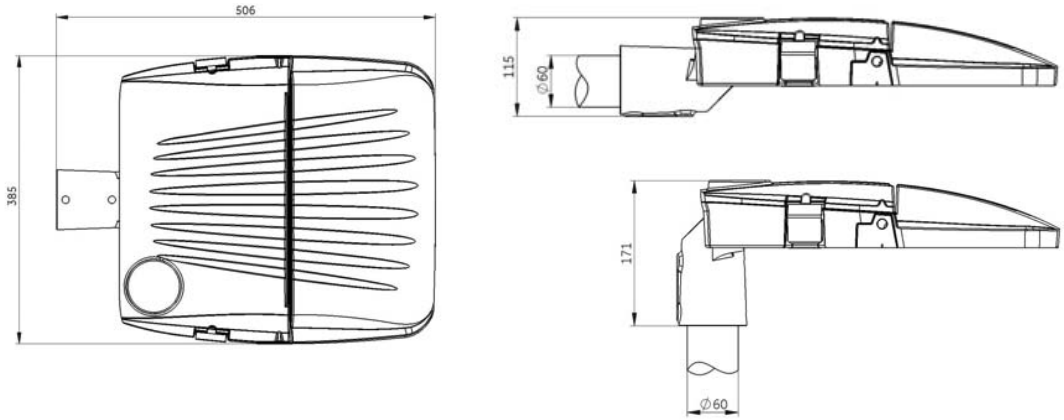


## With bracket

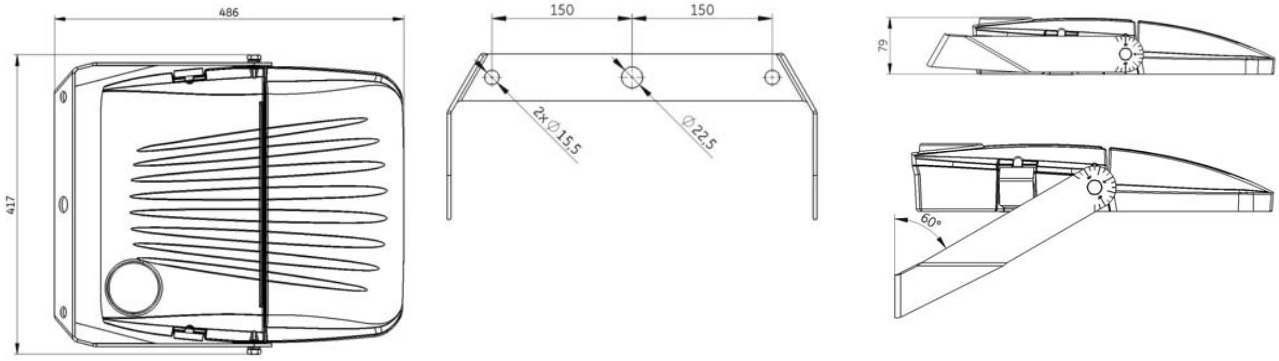


# Order logic

| ALIx LED | Generation | Front Glass | Optics | Nominal Power (W) | CCT [K] | Control | Accessories | IEC Protection Classes | Precabling | Mounting | Color |
|---|---|---|---|---|---|---|---|---|---|---|---|
| ALIX | 2 | F – Flat Glass | **AF** Asymmetric Forward<br>**AW** Asymmetric Wide<br>**AN** Asymmetric Narrow<br>**AEF** Asymmetric Extra Wide Flood<br>**AFN*** ** Asymmetric Forward Throw Narrow<br>**SWF** Symmetrical Wide Flood<br>**SNS** Symmetrical Narrow Spot | **32**<br>**50**<br>**70**<br>**100**<br>**140** | **3** 3000K<br>**4** 4000K<br>**5** 5000K | **N** No control<br>**D** DALI external<br>**M** Motion Sensor* | **ST** 4kV surge protection<br>**SP** Enhanced surge protection** | **1** Class I<br>**2** Class II* | **N** No precabling<br>**PXX** Precabling with XX meters | **C** 60mm coupler<br>**B** Bracket | R9007<br>R#### |

## Example: ALIX/2/F/AEF/140/4/D/ST/1/P10/C/R9005

*Class II option not available with (MS) - Motion Sensor control option
** Class I 140W: 10kV, Class I <=100W: 8kV, Class II 6kV Enchanced Surge Voltage Protection
*** AFN optic is only available with power levels 100 W &140 W



and General Electric are both registered trademarks of the General Electric Company

GE Lighting is constantly developing and improving its products. For this reason, all product descriptions in this brochure are intended as a general guide, and we may change specifications time to time in the interest of product development, without prior notification or public announcement. All descriptions in this publication present only general particulars of the goods to which they refer and shall not form part of any contract. Data in this guide has been obtained in controlled experimental conditions. However, GE Lighting cannot accept any liability arising from the reliance on such data to the extent permitted by law.