This drawing is the property of Technical Signs and must not be reproduced in part or in full without prior consent of Technical Signs.

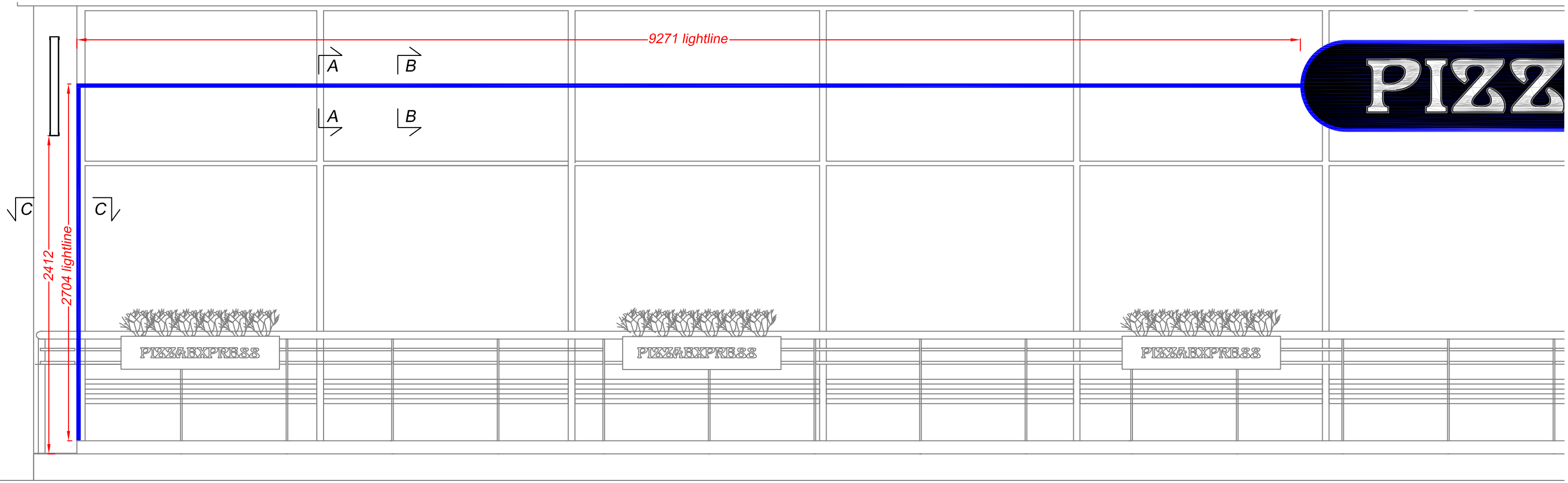

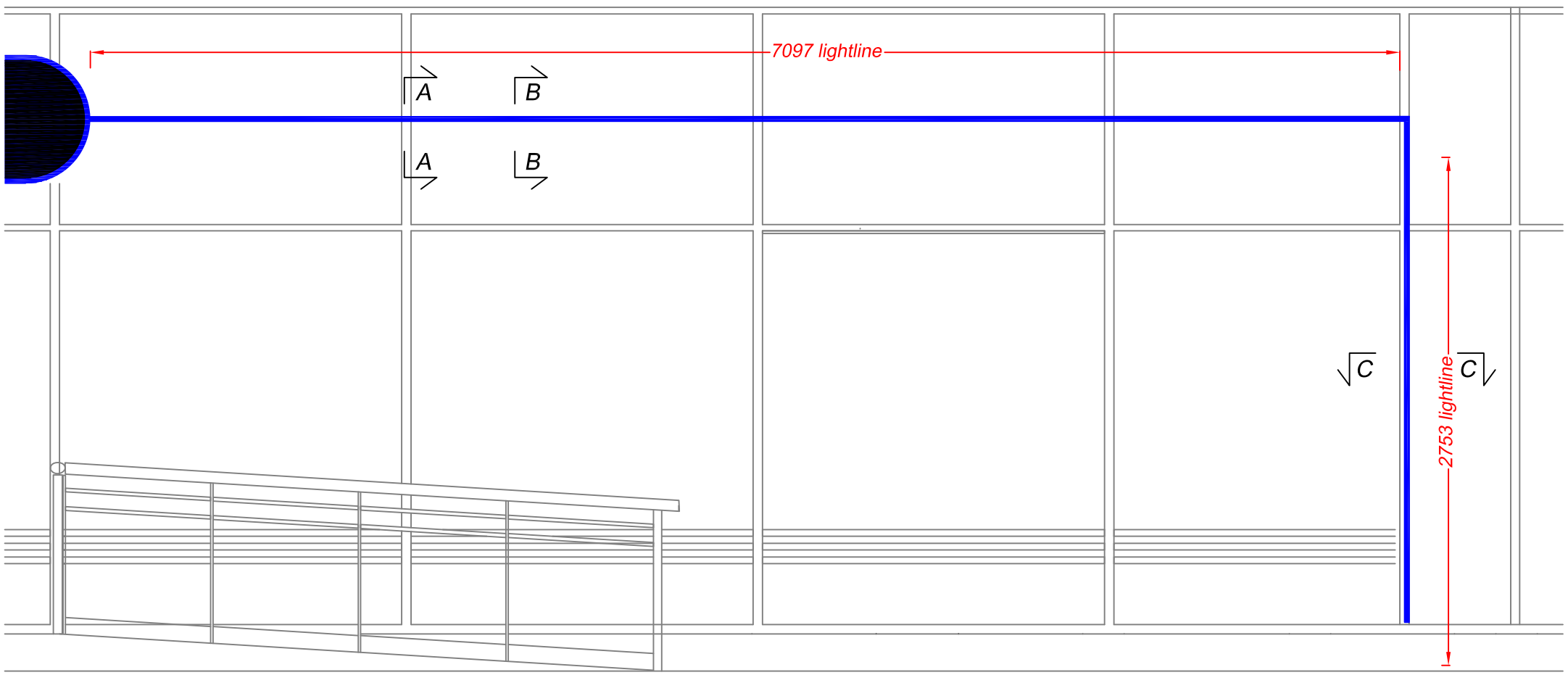

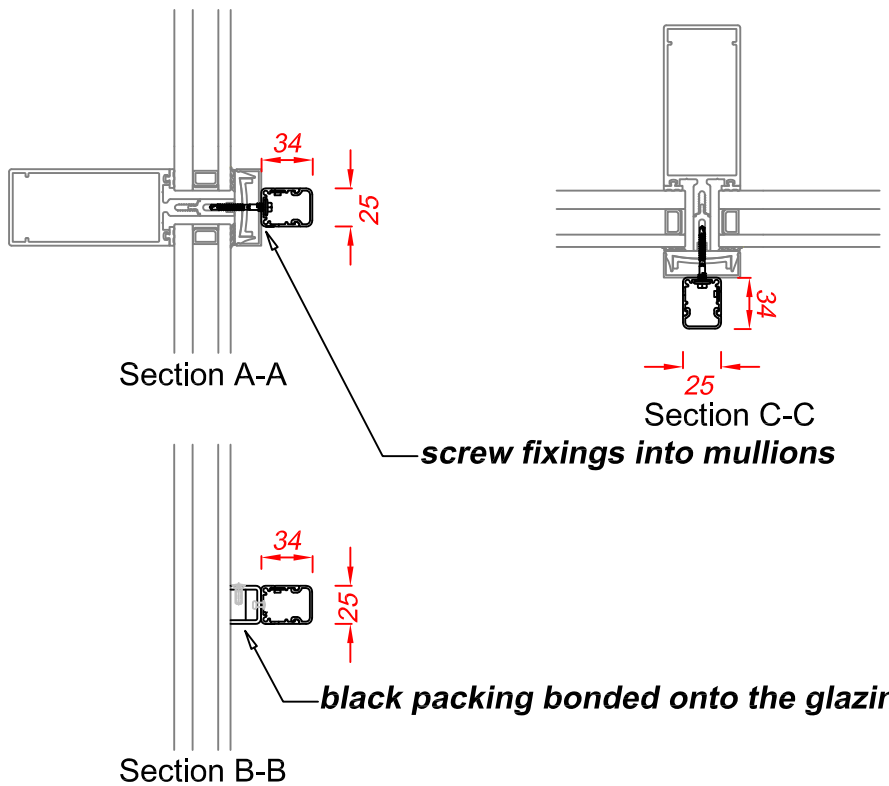

In addition to the lightlines on the lozenge panel, there's two horizontal lightlines and two vertical lightlines.
Lightlines are black aluminium extrusion channels with snapfit opal PVC diffusers. Fitted with 12v blue LEDs for face illumination.
4Ø self-tapping screws through the backs into the mullions or black metal packing strips bonded to the windows.
Packing strips are folded 2.5mm aluminium channel fitted over 10mm foamex bonded to the glazing.
Black vinyl or bonded metal may be needed on the inside of the glazing to hide the bonding marks being seen through the glass.

Technical Signs
Floor 1 - Unit 3
Hille Business Centre
132 St Albans Road
Watford, Herts, WD24 4AE
Tel: 01923 811999
Fax: 01923 811998
E-mail: info@technicalsigns.co.uk

Client	Pizza Express
Address/Job details	Unit 2, 102 Manchester Rd Chorlton M21 9SZ Lightline details
Job No	3392
Drawn by	DN
Date	14/09/18
Scale	1:30; 1:5 (A3)
Drawing No	
Rev	