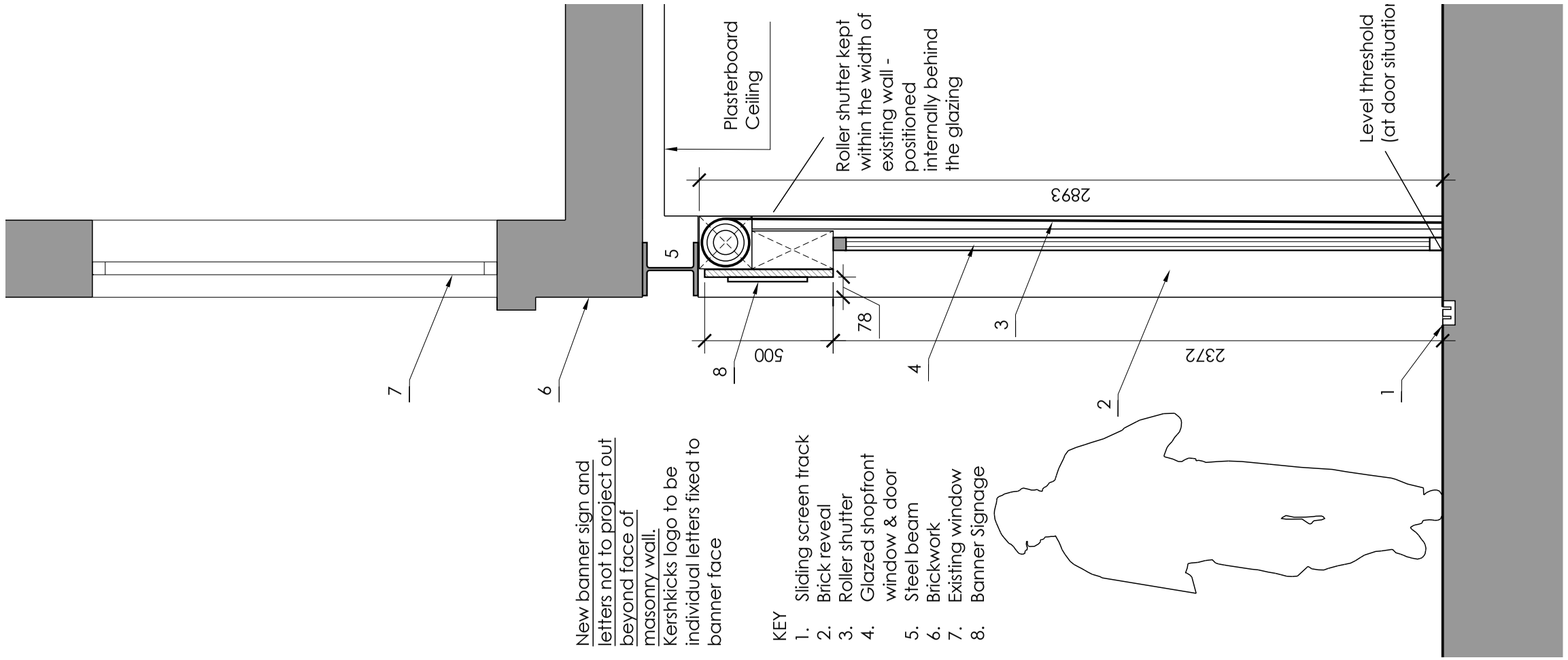

PROPOSED SECTION 01-01
2
1:20

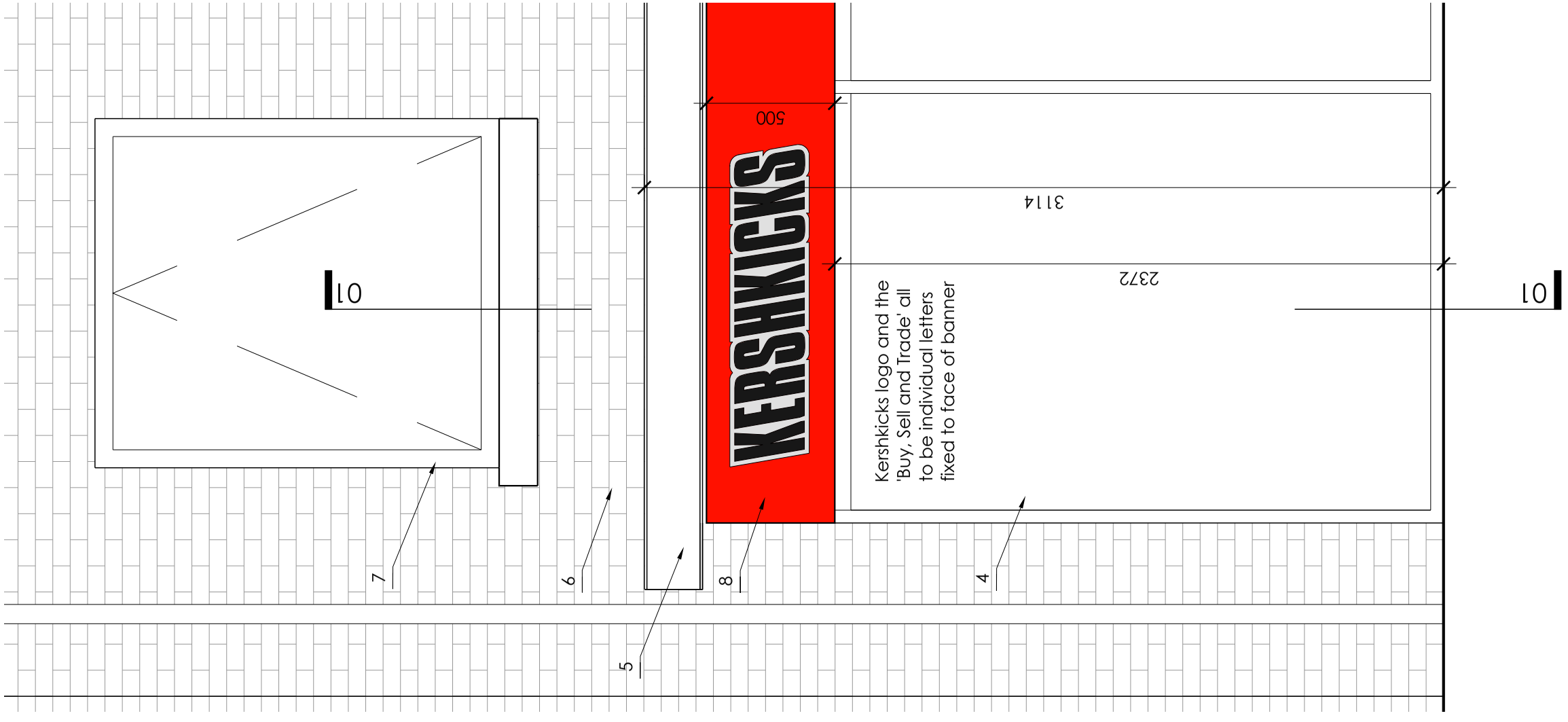

PROPOSED ELEVATION
1
1:20

NOTES

ALL DIMENSIONS ARE TO BE CHECKED ON SITE

ANY DISCREPANCIES ARE TO BE REPORTED TO THE ARCHITECT BEFORE ANY WORK COMMENCES

THIS DRAWING SHALL NOT BE SCALED TO ASCERTAIN ANY DIMENSIONS WORK TO FIGURED DIMS ONLY

THIS DRAWING SHALL NOT BE REPRODUCED WITHOUT EXPRESS WRITTEN PERMISSION FROM THE CREATOR.

READ IN CONJUNCTION WITH ALL RELEVANT DETAILS, SPECIFICATIONS, CONSULTANTS , SPECIALISTS AND SUBCONTRACTORS DRAWINGS / SPECIFICATIONS

P5	24.08.18	Signage recess increase
P4	21.08.18	Details revised
P3	02.07.18	Additional notes added
P2	02.07.18	Additional notes added
P1	25.06.18	Issued for Planning

STATUS PLANNING

unit3
unit3 design studio, 22a Jordan Street, Liverpool L1 0BP
w: www.unit3-designstudio.com t: 07886 248 490

Client: Mr Samuel Kersh

Project: 181009 KershKicks

Location: 36/40 Edge Street
Manchester
M4 1HN

Drawing No: AS-20-001

Drawing Name: Proposed Elevation Section

Revision: P5

Scale: 1:20 @ A3

Date: July 2018

Drawn: MS Checked: MS