This drawing is the property of Technical Signs and must not be reproduced in part or in full without prior consent of Technical Signs.

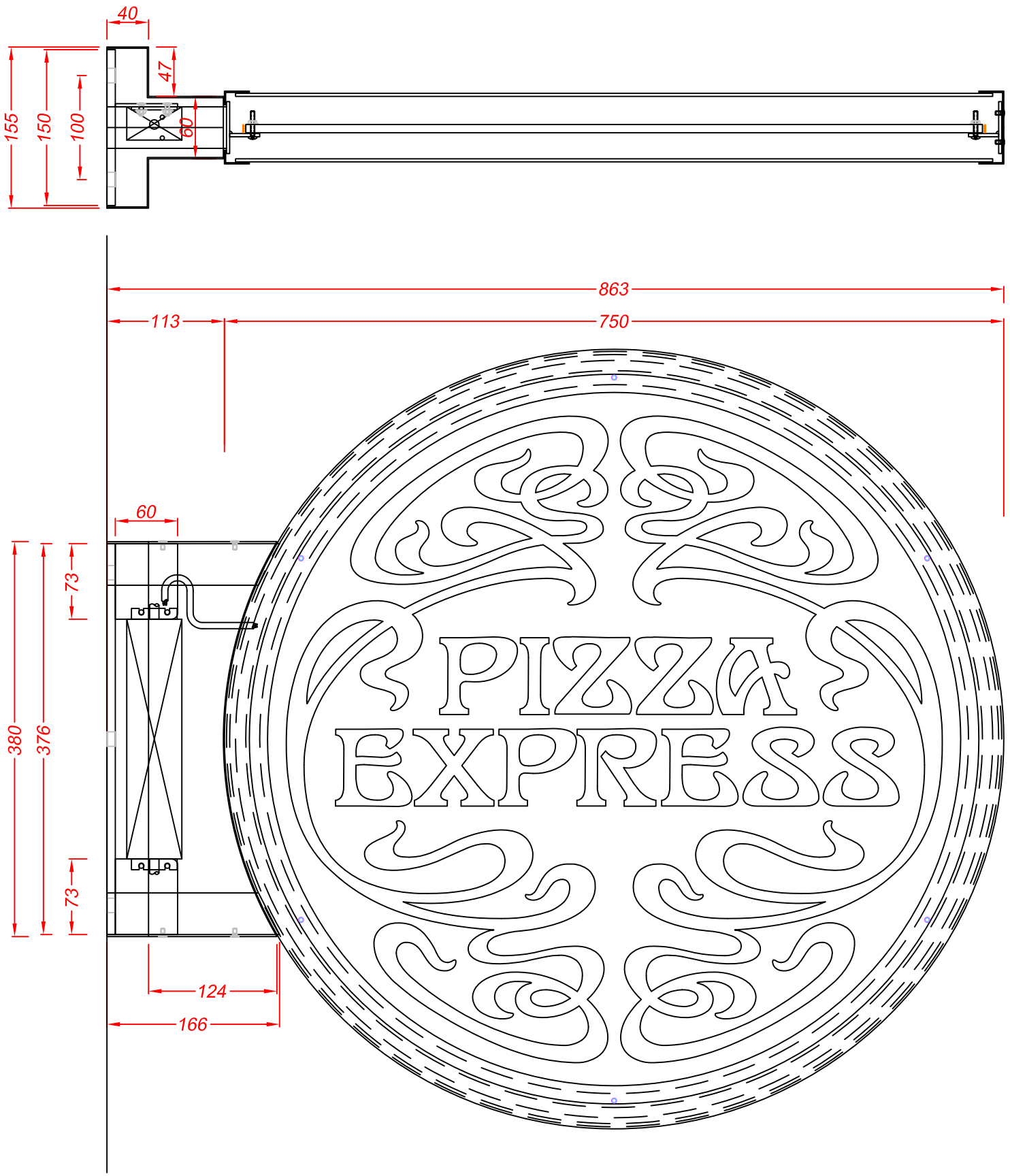

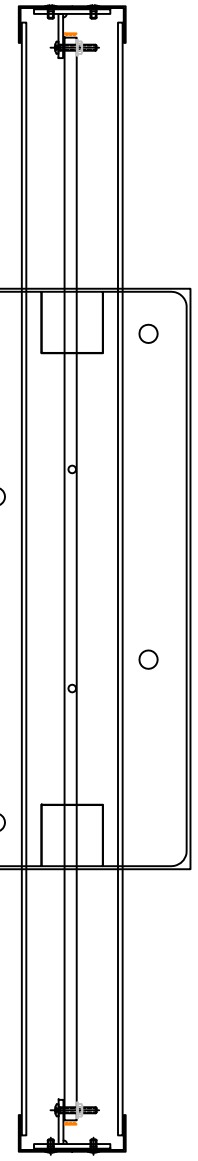

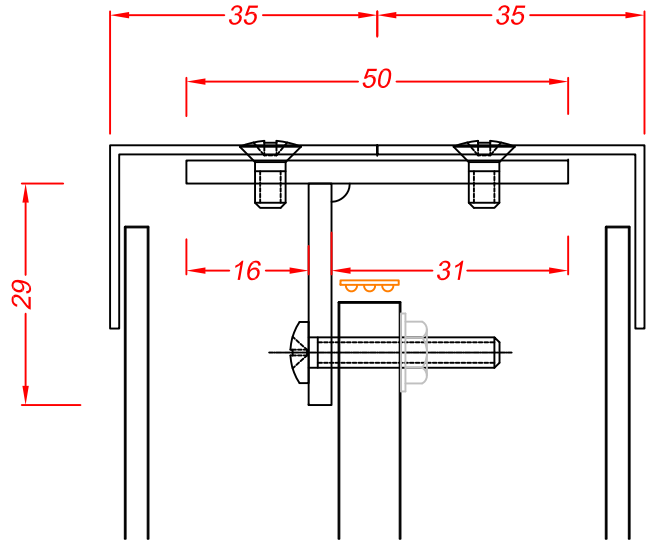

750mm dia projection sign - 1 off

1.2mm descaled st/st and welded returns.
Paint Satin Black.
5mm clear acrylic panels with reverse decorated graphic.
Reverse applied graphic has black vinyl background and white translucent vinyl logo.

All fixed around a 3mm m/st flat inner frame with 3mm welded m/st fixing ring.
Inner frame is welded to 40x40mm SHS m/st projecting arms which are welded to a 8mm m/st wall plate with 3mm m/st fixing lugs to hold transformer.
All concealed behind a 1.2mm descaled st/st paint Satin Black.
Fixed by four M10 steel rawl bolts, or four lengths of kemfast fixed M10 steel studs, going into the column.

Internally illuminated via 120 LED 10W white LED tape fitted around a 8mm prismatic panel held in place via the fixing ring.

Weigh estimate of 24kg

Parts List			
No	Description	size	QTY
1	Tridonic Transformer	60VA 12V DC	1
2	.	.	.
3	.	.	.
4	.	.	.

Technical Signs
Floor 1 - Unit 3
Hille Business Centre
132 St Albans Road
Watford, Herts, WD24 4AE
Tel: 01923 811999
Fax: 01923 811998
E-mail: info@technicalsigns.co.uk

Client Pizza Express
Address/Job details
Unit 2, 102 Manchester Rd
Chorlton
M21 9SZ

Projected Sign - 1 off

Job No 3392
Drawn by DN
Date 14/09/18
Scale 1:5; 1:1 (A3)
Drawing No
Rev