THIS DOCUMENT AND ALL INTELLECTUAL PROPERTY RELATING THERETO IS THE PROPERTY OF BARTON FABRICATIONS LTD THE INFORMATION CONTAINED CONFIDENTIAL INFORMATION WHICH MUST ONLY BE USED FOR THE PURPOSE FOR WHICH IT WAS EXPRESSLY PROVIDED BY BARTON FABRICATIONS LTD AND SHALL NOT BE COPIED, CONVERTED INTO OR STORED IN MACHINE READABLE FORM, OR DISCLOSED TO ANY THIRD PARTY, IN WHOLE OR IN PART, WITHOUT THE PRIOR WRITTEN CONSENT OF BARTON FABRICATIONS LTD

BASE LOADINGS

SILO DIAMETER	4000 mm
SILO HEIGHT	11000 mm
BULK DENSITY	600Kgm3
SILO WEIGHT EMPTY	30KN
SILO CONTENTS WEIGHT	650KN
TOTAL FILLED WEIGHT	680KN
WIND SPEED	50 metres per sec
HORIZONTAL SHEAR DUE TO WIND AT BASE	50KN
WIND TURNING MOMENT VESSEL EMPTY	310KN.m
NUMBER OF LOAD CELLS	3
MAXIMUM THRUST ON ONE LOAD CELL	260KN
MAXIMUM SHEAR ON ONE LOAD CELL	28KN
NUMBER OF HOLDING DOWN BOLTS	12
MAXIMUM TENSION IN EACH HOLDING DOWN BOLT	20KN
MINIMUM HOLDING DOWN BOLT DIAMETER	20mm

ROOF PLAN

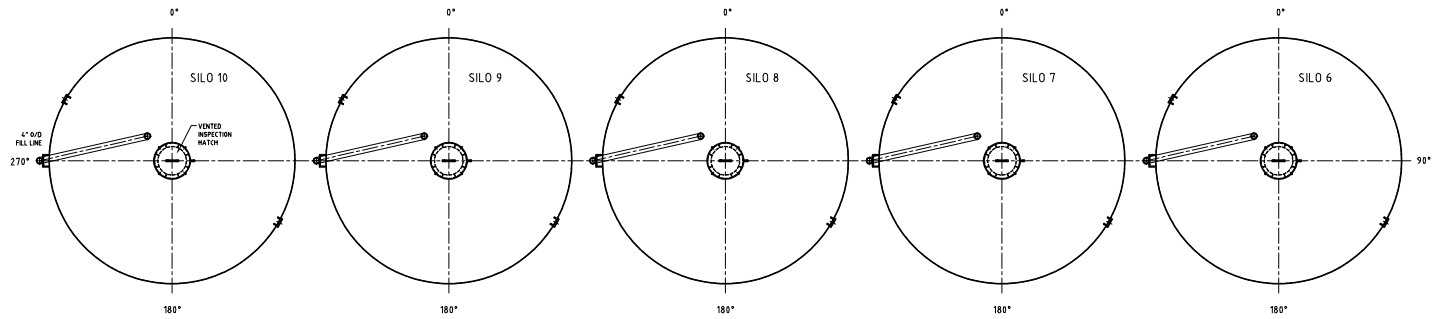

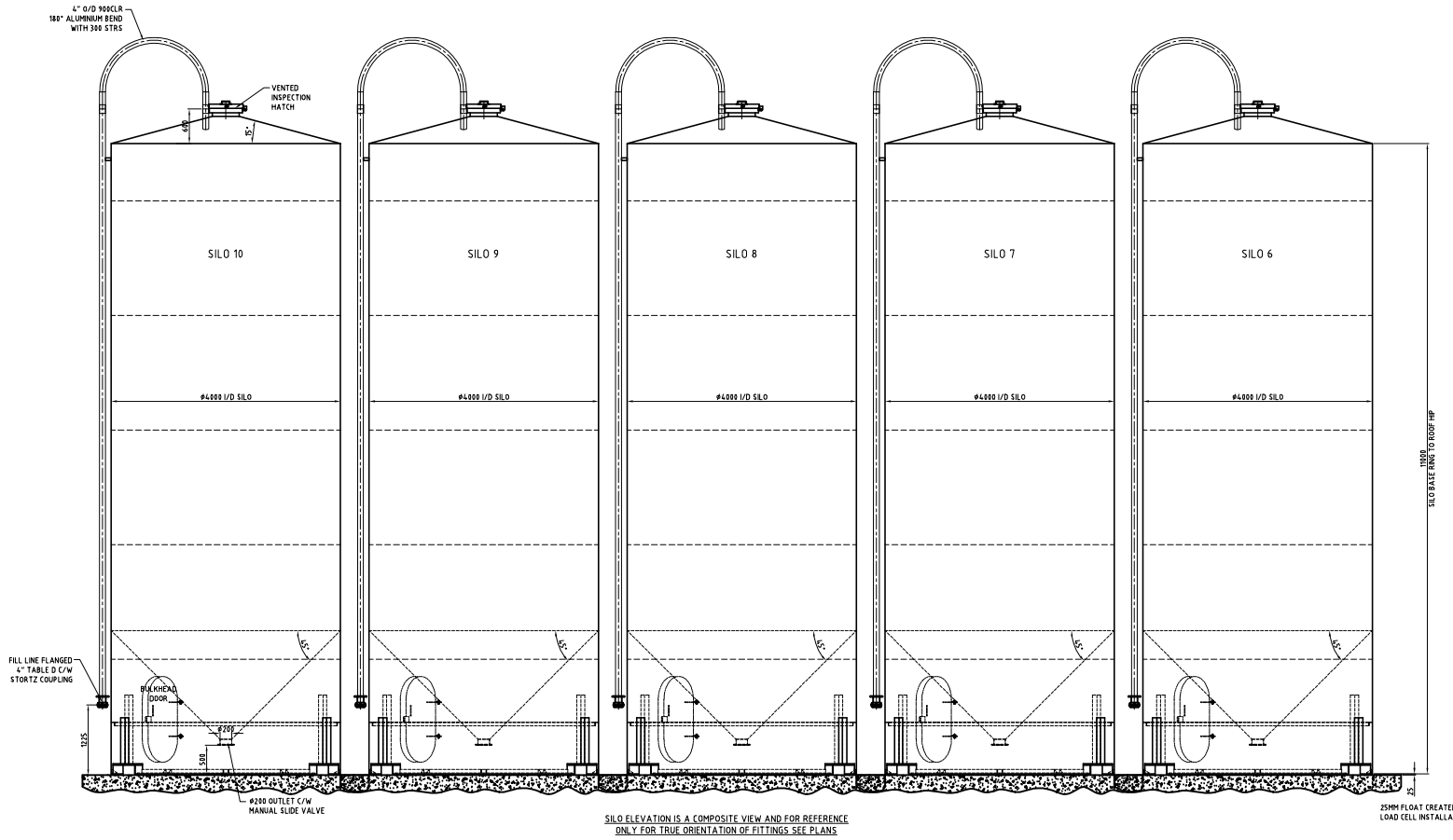

SILO ELEVATION IS A COMPOSITE VIEW AND FOR REFERENCE ONLY FOR TRUE ORIENTATION OF FITTINGS SEE PLANS

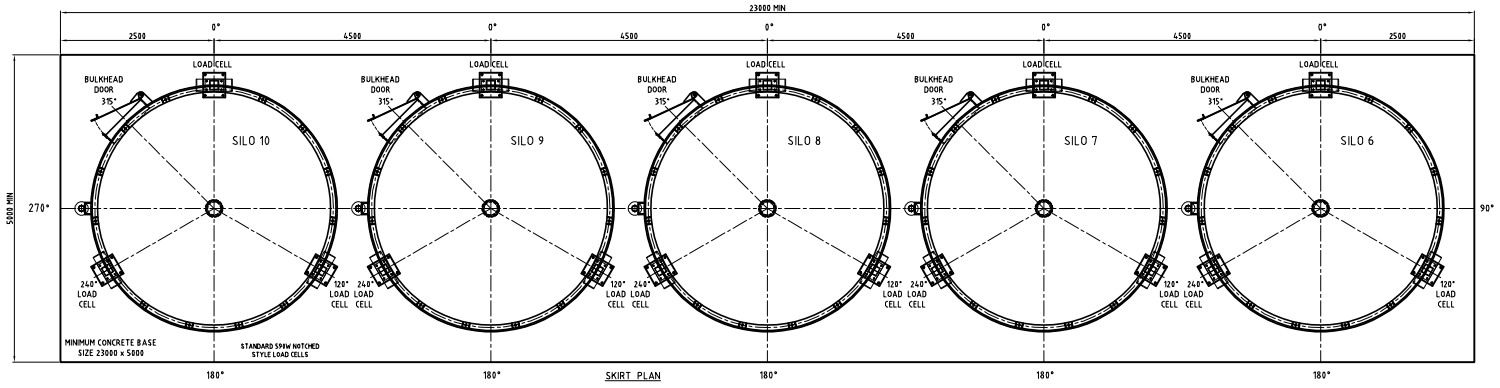

SKIRT PLAN

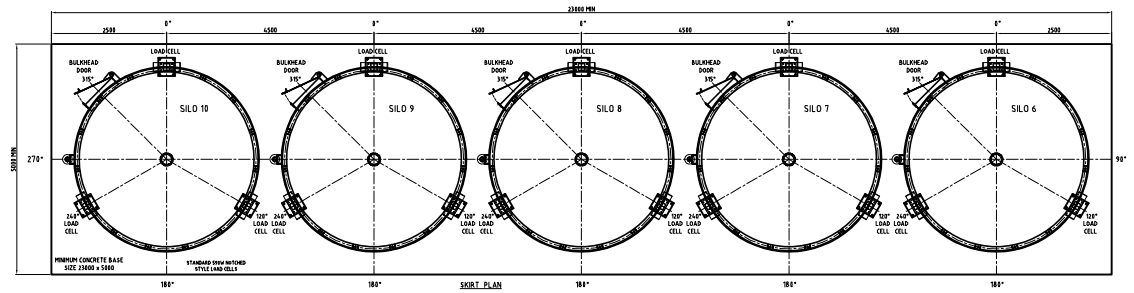

SKIRT PLAN

No.	DESCRIPTIONS	CHK'D	APP'D	DATE
x	x			xx-xx-xx

ALTERATIONS

BARTON FABRICATIONS LIMITED
HARBOUR ROAD TRADING ESTATE
PORTISHEAD
BRISTOL
BS20 7BL
TEL: 01275 845901
FAX: 01275 849462

SILO OUTLINE & BASE LOADINGS
ø4000 X 11000
5No

DWG.No. BF3686-01

EXECUTION CLASS 2

APPROVED | DATE 26-09-18 | PLOT SCALE X

CLIENT HELLERMANN TYTON

JOB NO.

A1