DAIKIN

Air Conditioning

Technical Data

VRV IV heat recovery



EEDEN15-200_4

REYQ-T

TABLE OF CONTENTS

REYQ-T

1 Features ... 2

2 Specifications ... 3
Technical Specifications ... 3
Electrical Specifications ... 4
Technical Specifications ... 6
Technical Specifications ... 7
Technical Specifications ... 8
Electrical Specifications ... 9
Electrical Specifications ... 9
Electrical Specifications ... 9
Technical Specifications ... 10
Electrical Specifications ... 11

3 Options ... 12

4 Combination table ... 13

5 Capacity tables ... 14
Capacity Table Legend ... 14
Integrated Heating Capacity Correction Factor ... 15
Capacity Correction Factor ... 16

6 Dimensional drawings ... 21

7 Centre of gravity ... 22

8 Piping diagrams ... 23

9 Wiring diagrams ... 24
Wiring Diagrams - Single Phase ... 24

10 External connection diagrams ... 28

11 Sound data ... 30
Sound Power Spectrum ... 30
Sound Pressure Spectrum ... 34

12 Installation ... 38
Installation Method ... 38
Fixation and Foundation of Units ... 39
Refrigerant Pipe Selection ... 40

13 Operation range ... 48

1 Features

Best efficiency & comfort solution

- Fully integrated solution with heat recovery for maximum efficiency with COPs of up to 8 !
- Covers all thermal needs of a building via a single point of contact: accurate temperature control, ventilation, hot water, air handling units and Biddle air curtains
- "Free" heating and hot water production provided by transferring heat from areas requiring cooling to areas requiring heating or hot water
- The perfect personal comfort for guests/tenants via simultaneous cooling and heating
- Incorporates VRV IV standards & technologies: Variable Refrigerant Temperature, continuous heating, VRV configurator, 7 segment display and full inverter compressors, 4-side heat exchanger, refrigerant cooled PCB, new DC fan motor
- Customize your VRV for best seasonal efficiency & comfort with the weather dependant Variable Refrigerant Temperature function. Increased seasonal efficiency with up to 28%. No more cold draft by supply of high outblow temperatures
- Continuous comfort: Unique continuous heating technology makes VRV IV the best alternative to traditional heating systems
- VRV configurator software for the fastest and most accurate commissioning, configuration and customisation
- Outdoor unit display for quick on-site settings and easy read out of errors together with the indication of service parameters for checking basic functions.
- Free combination of outdoor units to meet installation space or efficiency requirements
- Fits any building as also indoor installation is possible as a result of high external static pressure of up to 78.4 Pa. Indoor installation leads to less piping length, lower installation costs, increased efficiency and better visual aesthetics
- Simplified installation & guaranteed optimal efficiency with automatic charging & testing
- Easy compliance with F-gas regulation thanks to automated refrigerant containment check
- Wide piping flexibility: 30m indoor height difference, maximum piping length: 190m, total piping length: 1,000m
- Possibility to extend the operation range in cooling down to -20°C for technical cooling operation such as server rooms
- The ability to control each conditioned zone individually keeps VRV system running costs to an absolute minimum
- Spread your installation cost by phased installation
- Keep your system in top condition via our ACNSS service: 24/7 monitoring for maximum efficiency, extended lifetime, immediate service support thanks to failure prediction and a clear understanding of operability and usage





Inverter

2 Specifications

2-1 Technical Specifications					REYQ8T	REYQ10T	REYQ12T	REYQ14T	REYQ16T	REYQ18T	REYQ20T
Capacity range				HP	8	10	12	14	16	18	20
Cooling capacity	Nom.			kW	22.4 (1) / 22.4 (2)	28.0 (1) / 28.0 (2)	33.5 (1) / 33.5 (2)	40.0 (1) / 40.0 (2)	45.0 (1) / 45.0 (2)	50.4 (1)	56.0 (1)
Heating capacity	Nom.			kW	22.4 (3) / 22.40 (4)	28.0 (3) / 28.00 (4)	33.5 (3) / 33.5 (4)	40.0 (3) / 40.00 (4)	45.0 (3) / 45.00 (4)	50.4 (3)	56.0 (3)
	Max.			kW	25.0 (3)	31.5 (3)	37.5 (3)	45.0 (3)	50.0 (3)	56.5 (3)	63.0 (3)
Power input - 50Hz	Cooling	Nom.		kW	5.31 (1) / 4.56 (2)	7.15 (1) / 6.19 (2)	9.23 (1) / 8.31 (2)	10.7 (1) / 9.61 (2)	12.8 (1) / 11.9 (2)	15.2	18.6
	Heating	Nom.		kW	4.75 (3) / 4.47 (4)	6.29 (3) / 5.47 (4)	8.05 (3) / 6.83 (4)	9.60 (3) / 9.37 (4)	11.2 (3) / 9.88 (4)	12.3	14.9
		Max.		kW	5.51 (3)	7.38 (3)	9.43 (3)	11.3 (3)	12.9 (3)	14.3	17.5
EER					4.22 (1) / 4.92 (2)	3.92 (1) / 4.52 (2)	3.63 (1) / 4.03 (2)	3.74 (1) / 4.16 (2)	3.52 (1) / 3.79 (2)	3.32	3.01
ESEER - Automatic					7.41	7.37	6.84	7.05	6.63	6.26	5.68
ESEER - Standard					6.25	5.78	5.36	5.45	5.14	4.84	4.39
COP - Max.					4.54 (3)	4.27 (3)	3.98 (3)		3.88 (3)	3.95	3.60
COP - Nom.					4.72 (3) / 5.01 (4)	4.45 (3) / 5.12 (4)	4.16 (3) / 4.90 (4)	4.17 (3) / 4.27 (4)	4.02 (3) / 4.56 (4)	4.10	3.76
Maximum number of connectable indoor units					64 (5)						
Indoor index connection	Min.				100	125	150	175	200	225	250
	Nom.				200	250	300	350	400	450	500
	Max.				260	325	390	455	520	585	650
Dimensions	Unit	Height		mm	1,685						
		Width		mm	930			1,240			
		Depth		mm	765						
	Packed unit	Height		mm	1,820						
		Width		mm	1,000			1,310			
		Depth		mm	835						
Weight	Unit			kg	210	218		304	305	337	
	Packed unit			kg	226	234		320	321	353	
Packing	Material				Carton						
	Weight			kg	2.00			3.00			
Packing 2	Material				Wood						
	Weight			kg	17.00			18.50			
Packing 3	Material				Plastic						
	Weight			kg	0.50						
Casing	Colour				Daikin White						
	Material				Painted galvanized steel plate						
Heat exchanger	Type				Cross fin coil						
	Fin	Treatment			Anti-corrosion treatment						
Compressor	Quantity				1			2			
	Model				Inverter						
	Type				Hermetically sealed scroll compressor						
	Crankcase heater			W	33						
Compressor 2	Model				-			Inverter			
	Type				-			Hermetically sealed scroll compressor			
	Crankcase heater			W	-			33			
Fan	Type				Propeller fan						
	Quantity				1			2			
	Air flow rate	Cooling	Nom.	m³/min	162	175	185	223	260	251	261
	External static pressure	Max.		Pa	78						
	Discharge direction				Vertical						
Fan motor	Quantity				1			2			
	Model				Brushless DC motor						
	Output			W	750						
Fan motor 2	Model				-			Brushless DC motor			
	Output			W	-			750			
Sound power level	Cooling	Nom.		dBA	78	79	81		86		88

2 Specifications

2-1 Technical Specifications					REYQ8T	REYQ10T	REYQ12T	REYQ14T	REYQ16T	REYQ18T	REYQ20T
Sound pressure level	Cooling	Nom.		dBA	58		61		64	65	66
Operation range	Cooling	Min.~Max.		°CDB	-5.0~43.0						
	Heating	Min.~Max.		°CWB	-20~15.5						
	Water production	Space cooling	Min.~Max.	°CDB	10~43						
		Space heating	Min.~Max.	°CDB	-20~20 / 24 (6)						
		Domestic hot water	Min.~Max.	°CDB	-20~43						
Refrigerant	Type				R-410A						
	Charge			kg	9.7	9.8	9.9	11.8			
				TCO_2eq	20.2	20.5	20.7	24.6			
	GWP				2,087.5						
Refrigerant oil	Type				Synthetic (ether) oil						
Piping connections	Liquid	Type			Braze connection						
		OD		mm	9.52		12.7			15.9	
	Gas	Type			Braze connection						
		OD		mm	19.1	22.2	28.6				
	Discharge gas	Type			Braze connection						
		OD		mm	15.9	19.1		22.2			28.6
	Heat insulation				Liquid, Suction gas and HP/LP gas						
	Piping length	OU - IU	Max.	m	165 (7)						
		After branch	Max.	m	90 (7)						
	Total piping length	System	Actual	m	1,000 (7)						
	Level difference	OU - IU	Outdoor unit in highest position	m	90 (7)						
			Indoor unit in highest position	m	90 (7)						
		IU - IU	Max.	m	15						
Defrost method					Reversed cycle						
Safety devices	Item	01			High pressure switch						
		02			Fan driver overload protector						
		03			Inverter overload protector						
		04			PC board fuse						
PED	Category				Category II						
	Most critical part	Name			Liquid receiver						
		Ps*V		Bar*l	564			672		824	

Standard Accessories : Installation and operation manual;

Standard Accessories : Connection pipes;

2-2 Electrical Specifications				REYQ8T	REYQ10T	REYQ12T	REYQ14T	REYQ16T	REYQ18T	REYQ20T
Power supply	Name			Y1						
	Phase			3N~						
	Frequency		Hz	50						
	Voltage		V	380-415						
Voltage range	Min.		%	-10						
	Max.		%	10						
Current	Nominal running current (RLA) - 50Hz	Cooling	A	7.7	10.5	13.8	15.6	18.5	22.0	28.5

2 Specifications

2-2 Electrical Specifications				REYQ8T	REYQ10T	REYQ12T	REYQ14T	REYQ16T	REYQ18T	REYQ20T
Current - 50Hz	Minimum Ssc value		kVa	1,216	564	615	917	924	873	970
	Minimum circuit amps (MCA)		A	15.0	21.0		28.0	32.0	36.0	40.0
	Maximum fuse amps (MFA)		A	20	25		32	40		50
	Total overcurrent amps (TOCA)		A	17.3	21.1		35.4		42.7	
	Full load amps (FLA)	Total	A	1.2	1.3	1.5	1.8	2.6		
Wiring connections - 50Hz	For power supply	Quantity		5G						
	For connection with indoor	Quantity		2						
		Remark		F1,F2						
Power supply intake				Both indoor and outdoor unit						

2 Specifications

Notes

(1) Nominal cooling capacities are based on: indoor temperature: 27°CDB, 19°CWB, outdoor temperature: 35°CDB, equivalent refrigerant piping: 5m, level difference: 0m. Data for standard efficiency series

(2) Nominal cooling capacities are based on: indoor temperature: 27°CDB, 19°CWB, outdoor temperature: 35°CDB, equivalent refrigerant piping: 5m, level difference: 0m. Data for high efficiency series, Eurovent certified

(3) Nominal heating capacities are based on: indoor temperature: 20°CDB, outdoor temperature: 7°CDB, 6°CWB, equivalent refrigerant piping: 5m, level difference: 0m. Data for standard efficiency series

(4) Nominal heating capacities are based on: indoor temperature: 20°CDB, outdoor temperature: 7°CDB, 6°CWB, equivalent refrigerant piping: 5m, level difference: 0m. Data for high efficiency series, Eurovent certified

(5) Technical cooling setting, refer to the installation manual for more information

(6) Sound power level is an absolute value that a sound source generates.

(7) RLA is based on following conditions: indoor temp. 27°CDB, 19°CWB; outdoor temp. 35°CDB

If the indoor temperature is below 20°C before the start of the leak detection function, the unit will first heat the room to reach at least 20°C

Actual number of connectable indoor units depends on the indoor unit type (VRV indoor, Hydrobox, RA indoor, etc.) and the connection ratio restriction for the system (50% \<= CR \<= 130%)

Field setting

Sound pressure level is a relative value, depending on the distance and acoustic environment. For more details, please refer to the sound level drawings.

Sound values are measured in a semi-anechoic room.

For detailed contents of standard accessories see Installation manual.

REMQ5 unit cannot be used as standalone unit.

Refer to refrigerant pipe selection or installation manual

MSC means the maximum current during start up of the compressor. VRV IV uses only inverter compressors. Starting current is always ≤ max. running current.

MCA must be used to select the correct field wiring size. The MCA can be regarded as the maximum running current.

MFA is used to select the circuit breaker and the ground fault circuit interrupter (earth leakage circuit breaker).

TOCA means the total value of each OC set.

FLA: nominal running current fan

Voltage range: units are suitable for use on electrical systems where voltage supplied to unit terminal is not below or above listed range limits.

Maximum allowable voltage range variation between phases is 2%.

In accordance with EN/IEC 61000-3-11, respectively EN/IEC 61000-3-12, it may be necessary to consult the distribution network operator to ensure that the equipment is connected only to a supply with Zsys ≤ Zmax, respectively Ssc ≥ minimum Ssc value.

EN/IEC 61000-3-11: European/international technical standard setting the limits for voltage changes, voltage fluctuations and flicker in public low-voltage supply systems for equipment with rated ≤ 75A

EN/IEC 61000-3-12: European/international technical standard setting the limits for harmonic currents produced by equipment connected to public low-voltage system with input current \> 16A and ≤ 75A per phase

Short-circuit power

system impedance

Soundpressure and soundpower for multi units can be calculated, following below instructions.

Sound values are theoretical values based on sound results of individual installed units. Possible deviations due to variety of installation patterns are not taken into account.

Soundpressure system [dBA] = 10*log[10^(A/10)+10^(B/10)+10^(C/10)] , with Unit A = A dBA, Unit B = B dBA, Unit C = C dBA

contains fluorinated greenhouse gasses

2-3 Technical Specifications			REYQ10T	REYQ13T	REYQ16T	REYQ18T	REYQ20T	REYQ22T	REYQ24T	REYQ26T	REYQ28T	REYQ30T
System	Outdoor unit module 1		REMQ5T		REYQ8T			REYQ10T	REYQ8T	REYQ12T		
	Outdoor unit module 2		REMQ5T	REYQ8T		REYQ10T	REYQ12T		REYQ16T	REYQ14T	REYQ16T	REYQ18T
Capacity range		HP	10	13	16	18	20	22	24	26	28	30
Cooling capacity	Nom.	kW	28.0	36.4	44.8	50.4	55.9	61.5	67.4	73.5	78.5	83.9
Heating capacity	Nom.	kW	28.0	36.4	44.8	50.4	55.9	61.5	67.4	73.5	78.5	83.9
	Max.	kW	32.0	41.0	50.0	56.5	62.5	69.0	75.0	82.5	87.5	94.0

2 Specifications

2-3 Technical Specifications					REYQ10T	REYQ13T	REYQ16T	REYQ18T	REYQ20T	REYQ22T	REYQ24T	REYQ26T	REYQ28T	REYQ30T
Power input - 50Hz	Cooling	Nom.		kW	6.34	8.48	10.62	12.46	14.54	16.38	18.11	19.93	22.03	24.43
	Heating	Nom.		kW	5.42	7.46	9.50	11.04	12.80	14.34	15.95	17.65	19.25	20.35
		Max.		kW	6.50	8.76	11.02	12.89	14.94	16.81	18.41	20.73	22.33	23.73
EER					4.42	4.29	4.22	4.04	3.84	3.75	3.72	3.69	3.56	3.43
ESEER - Automatic					7.77	7.54	7.41	7.38	7.06	7.07	6.87	6.95	6.72	6.48
ESEER - Standard					6.55	6.36	6.25	5.98	5.68	5.54	5.46	5.41	5.23	5.03
COP - Max.					4.92	4.68	4.54	4.38	4.18	4.10	4.07	3.98	3.92	3.96
COP - Nom.					5.17	4.88	4.72	4.57	4.37	4.29	4.23	4.16	4.08	4.12
Maximum number of connectable indoor units					64									
Indoor index connection	Min.				125	162.5	200	225	250	275	300	325	350	375
	Nom.				250	325.0	400	450	500	550	600	650	700	750
	Max.				325	422.5	520	585	650	715	780	845	910	975
Piping connections	Liquid	Type			Braze connection									
		OD		mm	9.52	12.7		15.9				19.1		
	Gas	Type			Braze connection									
		OD		mm	22.2	28.6					34.9			
	Discharge gas	Type			Braze connection									
		OD		mm	19.1		22.2		28.6					
	Piping length	OU - IU	Max.	m	135					165				
		After branch	Max.	m	90									
	Total piping length	System	Actual	m	500					1,000				
	Level difference	OU - IU	Outdoor unit in highest position	m	90									
			Indoor unit in highest position	m	90									
		IU - IU	Max.	m	15									
PED	Category				Category II									
Continuous heating					v									

Standard Accessories : Installation and operation manual;

Standard Accessories : Connection pipes;

2-4 Technical Specifications				REYQ32T	REYQ34T	REYQ36T	REYQ38T	REYQ40T	REYQ42T	REYQ44T	REYQ46T	REYQ48T	REYQ50T
System	Outdoor unit module 1			REYQ16T			REYQ8T	REYQ10T		REYQ12T	REYQ14T	REYQ16T	
	Outdoor unit module 2			REYQ16T	REYQ18T	REYQ20T	REYQ12T		REYQ16T				
	Outdoor unit module 3			-			REYQ18T		REYQ16T				REYQ18T
Capacity range			HP	32	34	36	38	40	42	44	46	48	50
Cooling capacity	Nom.		kW	90.0	95.4	101.0	106.3	111.9	118.0	123.5	130.0	135.0	140.4
Heating capacity	Nom.		kW	90.0	95.4	101.0	106.3	111.9	118.0	123.5	130.0	135.0	140.4
	Max.		kW	100.0	106.5	113.0	119.0	125.5	131.5	137.5	145.0	150.0	156.5
Power input - 50Hz	Cooling	Nom.	kW	25.6	28.0	31.4	29.74	31.58	32.75	34.83	36.3	38.4	40.8
	Heating	Nom.	kW	22.4	23.5	26.1	25.10	26.64	28.69	30.45	32.00	33.6	34.7
		Max.	kW	25.8	27.2	30.4	29.24	31.11	33.18	35.23	37.1	38.7	40.1
EER				3.52	3.41	3.22	3.57	3.54	3.60	3.55	3.58	3.52	3.44
ESEER - Automatic				6.63	6.43	6.06	6.66	6.68	6.79	6.68	6.75	6.63	6.49
ESEER - Standard				5.14	4.97	4.70	5.25	5.20	5.28	5.20	5.23	5.14	5.03
COP - Max.				3.88	3.92	3.72	4.07	4.03	3.96	3.90	3.91	3.88	3.90
COP - Nom.				4.02	4.06	3.87	4.24	4.20	4.11	4.06		4.02	4.05
Maximum number of connectable indoor units				64									

2 Specifications

2-4 Technical Specifications					REYQ32T	REYQ34T	REYQ36T	REYQ38T	REYQ40T	REYQ42T	REYQ44T	REYQ46T	REYQ48T	REYQ50T
Indoor index connection	Min.				400	425	450	475	500	525	550	575	600	625
	Nom.				800	850	900	950	1,000	1,050	1,100	1,150	1,200	1,250
	Max.				1,040	1,105	1,170	1,235	1,300	1,365	1,430	1,495	1,560	1,625
Piping connections	Liquid	Type			Braze connection									
		OD		mm	19.1									
	Gas	Type			Braze connection									
		OD		mm	34.9		41.3							
	Discharge gas	Type			Braze connection									
		OD		mm	28.6			34.9						
	Piping length	OU - IU	Max.	m	165									
		After branch	Max.	m	90									
	Total piping length	System	Actual	m	1,000									
	Level difference	OU - IU	Outdoor unit in highest position	m	90									
			Indoor unit in highest position	m	90									
		IU - IU	Max.	m	15									
PED	Category				Category II									
Continuous heating					v									

Standard Accessories : Installation and operation manual;

Standard Accessories : Connection pipes;

2-5 Technical Specifications				REYQ52T	REYQ54T
System	Outdoor unit module 1			REYQ16T	REYQ18T
	Outdoor unit module 2			REYQ18T	
	Outdoor unit module 3			REYQ18T	
Capacity range			HP	52	54
Cooling capacity	Nom.		kW	145.8	151.2
Heating capacity	Nom.		kW	145.8	151.2
	Max.		kW	163.0	169.5
Power input - 50Hz	Cooling	Nom.	kW	43.2	45.6
	Heating	Nom.	kW	35.8	36.9
		Max.	kW	41.5	42.9
EER				3.38	3.32
ESEER - Automatic				6.37	6.26
ESEER - Standard				4.93	4.84
COP - Max.				3.93	3.95
COP - Nom.				4.07	4.10
Maximum number of connectable indoor units				64	
Indoor index connection	Min.			650	675
	Nom.			1,300	1,350
	Max.			1,690	1,755

2 Specifications

2-5 Technical Specifications					REYQ52T	REYQ54T
Piping connections	Liquid	Type			Braze connection	
		OD		mm	19.1	
	Gas	Type			Braze connection	
		OD		mm	41.3	
	Discharge gas	Type			Braze connection	
		OD		mm	34.9	
	Piping length	OU - IU	Max.	m	165	
		After branch	Max.	m	90	
	Total piping length	System	Actual	m	1,000	
	Level difference	OU - IU	Outdoor unit in highest position	m	90	
			Indoor unit in highest position	m	90	
		IU - IU	Max.	m	15	
PED	Category				Category II	
Continuous heating					v	

Standard Accessories : Installation and operation manual;

Standard Accessories : Connection pipes;

2-6 Electrical Specifications				REYQ10T	REYQ13T	REYQ16T	REYQ18T	REYQ20T	REYQ22T	REYQ24T	REYQ26T	REYQ28T	REYQ30T
Current	Nominal running current (RLA) - 50Hz	Cooling	A	8.2	11.8	15.4	18.2	21.5	24.3	26.2	29.4	32.3	35.8
Current - 50Hz	Minimum Ssc value		kVa	2,432			1,780	1,831	1,179	2,140	1,532	1,539	1,488
	Minimum circuit amps (MCA)		A	30.0			36.0		42.0	47.0	49.0	53.0	57.0
	Maximum fuse amps (MFA)		A	40					50	63			
Wiring connections - 50Hz	For power supply	Quantity		5G									
	For connection with indoor	Quantity		2									
		Remark		F1,F2									
Power supply intake				Both indoor and outdoor unit									

2-7 Electrical Specifications				REYQ32T	REYQ34T	REYQ36T	REYQ38T	REYQ40T	REYQ42T	REYQ44T	REYQ46T	REYQ48T	REYQ50T
Current	Nominal running current (RLA) - 50Hz	Cooling	A	37.0	40.5	47.0	43.5	46.3	47.5	50.8	52.6	55.5	59.0
Current - 50Hz	Minimum Ssc value		kVa	1,848	1,797	1,894	2,704	2,052	2,412	2,463	2,765	2,772	2,721
	Minimum circuit amps (MCA)		A	64.0	68.0	72.0		78.0	85.0		92.0	96.0	100.0
	Maximum fuse amps (MFA)		A	80				100			125		
Wiring connections - 50Hz	For power supply	Quantity		5G									
	For connection with indoor	Quantity		2									
		Remark		F1,F2									
Power supply intake				Both indoor and outdoor unit									

2-8 Electrical Specifications				REYQ52T	REYQ54T
Current	Nominal running current (RLA) - 50Hz	Cooling	A	62.5	66.0
Current - 50Hz	Minimum Ssc value		kVa	2,670	2,619
	Minimum circuit amps (MCA)		A	104.0	108.0
	Maximum fuse amps (MFA)		A	125	
Wiring connections - 50Hz	For power supply	Quantity		5G	
	For connection with indoor	Quantity		2	
		Remark		F1,F2	
Power supply intake				Both indoor and outdoor unit	

2 Specifications

Notes

Nominal cooling capacities are based on: indoor temperature: 27°CDB, 19°CWB, outdoor temperature: 35°CDB, equivalent refrigerant piping: 5m, level difference: 0m. Data for standard efficiency series

Nominal heating capacities are based on: indoor temperature: 20°CDB, outdoor temperature: 7°CDB, 6°CWB, equivalent refrigerant piping: 5m, level difference: 0m. Data for standard efficiency series

If the indoor temperature is below 20°C before the start of the leak detection function, the unit will first heat the room to reach at least 20°C

Actual number of connectable indoor units depends on the indoor unit type (VRV indoor, Hydrobox, RA indoor, etc.) and the connection ratio restriction for the system (50% \<= CR \<= 130%)

Technical cooling setting, refer to the installation manual for more information

Field setting

Sound power level is an absolute value that a sound source generates.

Sound pressure level is a relative value, depending on the distance and acoustic environment. For more details, please refer to the sound level drawings.

Sound values are measured in a semi-anechoic room.

For detailed contents of standard accessories see Installation manual.

REMQ5 unit cannot be used as standalone unit.

Refer to refrigerant pipe selection or installation manual

RLA is based on following conditions: indoor temp. 27°CDB, 19°CWB; outdoor temp. 35°CDB

MSC means the maximum current during start up of the compressor. VRV IV uses only inverter compressors. Starting current is always ≤ max. running current.

MCA must be used to select the correct field wiring size. The MCA can be regarded as the maximum running current.

MFA is used to select the circuit breaker and the ground fault circuit interrupter (earth leakage circuit breaker).

TOCA means the total value of each OC set.

FLA: nominal running current fan

Voltage range: units are suitable for use on electrical systems where voltage supplied to unit terminal is not below or above listed range limits.

Maximum allowable voltage range variation between phases is 2%.

In accordance with EN/IEC 61000-3-11, respectively EN/IEC 61000-3-12, it may be necessary to consult the distribution network operator to ensure that the equipment is connected only to a supply with Zsys ≤ Zmax, respectively Ssc ≥ minimum Ssc value.

EN/IEC 61000-3-11: European/international technical standard setting the limits for voltage changes, voltage fluctuations and flicker in public low-voltage supply systems for equipment with rated ≤ 75A

EN/IEC 61000-3-12: European/international technical standard setting the limits for harmonic currents produced by equipment connected to public low-voltage system with input current \> 16A and ≤ 75A per phase

Short-circuit power

system impedance

Contains fluorinated greenhouse gases

Soundpressure and soundpower for multi units can be calculated, following below instructions.

Sound values are theoretical values based on sound results of individual installed units. Possible deviations due to variety of installation patterns are not taken into account.

Soundpressure system [dBA] = 10*log[10^(A/10)+10^(B/10)+10^(C/10)] , with Unit A = A dBA, Unit B = B dBA, Unit C = C dBA

2-9 Technical Specifications				REMQ5T
Dimensions	Unit	Height	mm	1,685
		Width	mm	930
		Depth	mm	765
	Packed unit	Height	mm	1,820
		Width	mm	1,000
		Depth	mm	835
Weight	Unit		kg	210
	Packed unit		kg	226
Packing	Material			Carton
	Weight		kg	2.00
Packing 2	Material			Wood
	Weight		kg	17.00

2 Specifications

2-9 Technical Specifications					REMQ5T
Packing 3	Material				Plastic
	Weight			kg	0.50
Casing	Colour				Daikin White
	Material				Painted galvanized steel plate
Heat exchanger	Type				Cross fin coil
	Fin	Treatment			Anti-corrosion treatment
Compressor	Quantity				1
	Model				Inverter
	Type				Hermetically sealed scroll compressor
	Crankcase heater			W	33
Fan	Type				Propeller fan
	Quantity				1
	Air flow rate	Cooling	Nom.	m^3/min	162
	External static pressure	Max.		Pa	78
	Discharge direction				Vertical
Fan motor	Quantity				1
	Model				Brushless DC motor
	Output			W	750
Sound power level	Cooling	Nom.		dBA	77
Sound pressure level	Cooling	Nom.		dBA	56
Operation range	Cooling	Min.~Max.		°CDB	-5.0~43.0
	Heating	Min.~Max.		°CWB	-20~15.5
	Water production	Space cooling	Min.~Max.	°CDB	10~43
		Space heating	Min.~Max.	°CDB	-20~20 / 24 (7
		Domestic hot water	Min.~Max.	°CDB	-20~43
Refrigerant	Type				R-410A
	Charge			kg	9.7
				TCO_2eq	20.2
	GWP				2,087.5
Refrigerant oil	Type				Synthetic (ether) oil
Piping connections	Heat insulation				Liquid, Suction gas and HP/LP gas
Safety devices	Item	01			High pressure switch
		02			Fan driver overload protector
		03			Inverter overload protector
		04			PC board fuse

2-10 Electrical Specifications				REMQ5T
Power supply	Name			Y1
	Phase			3N~
	Frequency		Hz	50
	Voltage		V	380-415
Voltage range	Min.		%	-10
	Max.		%	10
Current	Nominal running current (RLA) - 50Hz	Cooling	A	4.1
Current - 50Hz	Minimum Ssc value		kVa	1,216
	Minimum circuit amps (MCA)		A	15.0
	Maximum fuse amps (MFA)		A	20
	Total overcurrent amps (TOCA)		A	17.3
	Full load amps (FLA)	Total	A	1.2

3 Options

3 - 1 Options

REMQ5T
REYQ-T

Description	Option	REMQ5*	REYQ8*	REYQ10*	REYQ12*	REYQ14*	REYQ16*	REYQ18*	REYQ20*	Multi ·2·	Multi ·3·
Low ambient option	EKBPH012T (*1)	o	o	o	o	-	-	-	-	o	o
Bottom plate heater	EKBPH020T (*1)	-	-	-	-	o	o	o	o	o	o
PC cable kit	EKPCCAB2	o	o	o	o	o	o	o	o	o	o
Refnet header	KHRQ23M29H	o	o	o	o	o	o	o	o	o	o
	KHRQ23M64H	-	-	-	o	o	o	o	o	o	o
	KHRQ23M75H	-	-	-	-	-	-	-	-	o	o
Refnet joint	KHRQ23M20T	o	o	o	o	o	o	o	o	o	o
	KHRQ23M29T9	o	o	o	o	o	o	o	o	o	o
	KHRQ23M64T	-	-	-	o	o	o	o	o	o	o
	KHRQ23M75T	-	-	-	-	-	-	-	-	o	o
Outdoor multi-connection kit	BHFQ23P907	-	-	-	-	-	-	-	-	o	-
	BHFQ23P1357	-	-	-	-	-	-	-	-	-	o
Single ·BSVQ· unit	BS1Q10A	o	o	o	o	o	o	o	o	o	o
	BS1Q16A	o	o	o	o	o	o	o	o	o	o
(*2) (*3)	BS1Q25A	o	o	o	o	o	o	o	o	o	o
Multi ·BS· unit	BS4Q14A	o	o	o	o	o	o	o	o	o	o
	BS6Q14A	o	o	o	o	o	o	o	o	o	o
	BS8Q14A	o	o	o	o	o	o	o	o	o	o
	BS10Q14A	o	o	o	o	o	o	o	o	o	o
	BS12Q14A	o	o	o	o	o	o	o	o	o	o
	BS16Q14A	o	o	o	o	o	o	o	o	o	o

Notes
1. One bottom plate heater per outdoor unit required.
2. Sound reduction kit ·EKBSVQLNP·
   One sound reduction kit per ·BSVQ· box required.
3. Technical cooling is available.
4. Multi-tenancy is available

3D088010

4 Combination table

4 - 1 Combination Table

REYQ-T

		5HP	8HP	10HP	12HP	14HP	16HP	18HP	20HP
	REMQ5* (*1)	1							
Non-continuous heating	REYQ8*		1						
	REYQ10*			1					
	REYQ12*				1				
	REYQ14*					1			
	REYQ16*						1		
	REYQ18*							1	
	REYQ20*								1
Continuous heating ·2· outdoor units	REYQ10*	2							
	REYQ13*	1	1						
	REYQ16*		2						
	REYQ18*		1	1					
	REYQ20*		1		1				
	REYQ22*			1	1				
	REYQ24*		1				1		
	REYQ26*				1	1			
	REYQ28*				1		1		
	REYQ30*				1			1	
	REYQ32*						2		
	REYQ34*						1	1	
	REYQ36*						1		1
Continuous heating ·3· outdoor units	REYQ38*		1		1			1	
	REYQ40*			1	1			1	
	REYQ42*			1			2		
	REYQ44*				1		2		
	REYQ46*					1	2		
	REYQ48*						3		
	REYQ50*						2	1	
	REYQ52*						1	2	
	REYQ54*							3	

Notes
1. The ·REMQ5*· unit cannot be used as a standalone unit and may only be used in standard combinations.
2. Standard and free combinations have different piping restrictions.
3. Never combine more than ·3· units to create a multi-combination.

3D088011

REYQ-T

Indoor unit combination pattern	VRV indoor unit	VRV indoor unit Cooling only unit	LT Hydrobox unit	HT Hydrobox unit	AHU (*3)
VRV indoor unit	o	o	o	o	o
VRV indoor unit Cooling only unit	o	o	o	*Not allowed*	o
LT Hydrobox unit	o	o	o (*1)	o (*1)	*Not allowed*
HT Hydrobox unit	o	*Not allowed*	o (*1)	o (*1)	*Not allowed*
AHU (*3)	o	o	*Not allowed*	*Not allowed*	o (*2)

Notes
1. ·Hydroboxes· indoor units may not be used without a ·VRV· indoor unit
   Refer to the connection ratio restrictions.
2. ·AHUs·/air curtains may not be used without a ·VRV· indoor unit.
   Refer to the connection ratio restrictions.
3. The following units are considered AHUs:
   3.1 ·EKEXV + EKEQM + AHU· coil
   3.2 ·Biddle· air curtain
   3.3 ·FXMQ*MF· unit

3D088013

5 Capacity tables

5 - 1 Capacity Table Legend

In order to fulfill more your requirements on quick access of data in the format you require, we have developed a tool to consult capacity tables.

Below you can find the link to the capacity table database and an overview of all the tools we have to help you select the correct product:

- Capacity table database: lets you find back and export quickly the capacity information you are looking for based upon unit model, refrigerant temperature and connection ratio.
  → http://extranet.daikineurope.com/captab
- E-data app: gives a complete overview of the Daikin products available in your country, with all engineering data and commercial info in your own language. Download the app now!
  → https://itunes.apple.com/us/app/daikin-e-data/id565955746?mt=8
- Selection software: allows you to do load calculations, equipment selections and energy simulations for our VRV, Daikin Altherma, refrigeration and applied systems products.
  → http://extranet.daikineurope.com/en/software/downloads/default.jsp

5 Capacity tables

5 - 2 Integrated Heating Capacity Correction Factor

REYQ-T

The heating capacity tables do not take into account the capacity reduction in case of frost accumulation or defrost operation.

The capacity values that take these factors into account, or in other words, the integrated heating capacity values, can be calculated as follows:

Formula **A = B * C**

A= Integrated heating capacity
B= Capacity characteristics value
C= Integrated correction factor for frost accumulation (see table)

Inlet air temperature of heat exchanger

	[°CDB/°CWB]	-7/-7,6	-5/-5,6	-3/-3,7	0/-0,7	3/2,2	5/4,1	7/6
	Integrated correction factor for frost accumulation ·(C)·							
For single unit installation	**8HP**	0.95	0.93	0.88	0.84	0.85	0.90	1.00
	10HP	0.95	0.93	0.87	0.79	0.80	0.88	1.00
	12HP	0.95	0.92	0.87	0.75	0.76	0.85	1.00
	14HP	0.95	0.92	0.86	0.72	0.73	0.84	1.00
	16HP	0.95	0.92	0.86	0.72	0.72	0.83	1.00
	18HP	0.95	0.93	0.88	0.84	0.85	0.90	1.00
	20HP	0.95	0.93	0.88	0.84	0.85	0.90	1.00
For multi-unit installation	**10HP**	0.95	0.93	0.88	0.84	0.85	0.90	1.00
	13HP	0.95	0.93	0.88	0.84	0.85	0.90	1.00
	16HP	0.95	0.93	0.88	0.84	0.85	0.90	1.00
	18HP	0.95	0.93	0.88	0.82	0.83	0.89	1.00
	20HP	0.95	0.93	0.88	0.80	0.81	0.88	1.00
	22HP	0.95	0.92	0.87	0.77	0.78	0.86	1.00
	24HP	0.95	0.92	0.87	0.75	0.76	0.85	1.00
	26HP	0.95	0.92	0.86	0.73	0.74	0.84	1.00
	28HP	0.95	0.92	0.86	0.73	0.74	0.84	1.00
	30HP	0.95	0.93	0.87	0.80	0.81	0.88	1.00
	32HP	0.95	0.92	0.86	0.71	0.72	0.83	1.00
	34HP	0.95	0.92	0.87	0.78	0.79	0.87	1.00
	36HP	0.95	0.92	0.87	0.78	0.79	0.87	1.00
	38HP	0.95	0.93	0.88	0.83	0.84	0.89	1.00
	40HP	0.95	0.93	0.87	0.80	0.81	0.88	1.00
	42HP	0.95	0.92	0.86	0.73	0.74	0.84	1.00
	44HP	0.95	0.92	0.86	0.72	0.73	0.84	1.00
	46HP	0.95	0.92	0.86	0.72	0.72	0.83	1.00
	48HP	0.95	0.92	0.86	0.71	0.72	0.83	1.00
	50HP	0.95	0.92	0.87	0.76	0.77	0.86	1.00
	52HP	0.95	0.93	0.87	0.80	0.81	0.88	1.00
	54HP	0.95	0.93	0.88	0.84	0.85	0.90	1.00

Notes

1. The figure shows the integrated heating capacity for a single cycle (from one defrost operation to the next).
2. When there is an accumulation of snow against the outdoor unit heat exchanger, there will always be a temporary reduction in capacity depending on the outdoor temperature (°C DB), relative humidity (RH) and the amount of frosting which occurs.
3. The multi-combination data ·VRV4· corresponds with the standard multi-combination of drawing ·3D088011·.

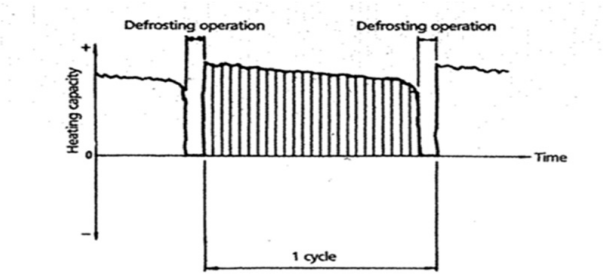

3D088034

5 Capacity tables

5 - 3 Capacity Correction Factor

REYQ8T
REYQ22T

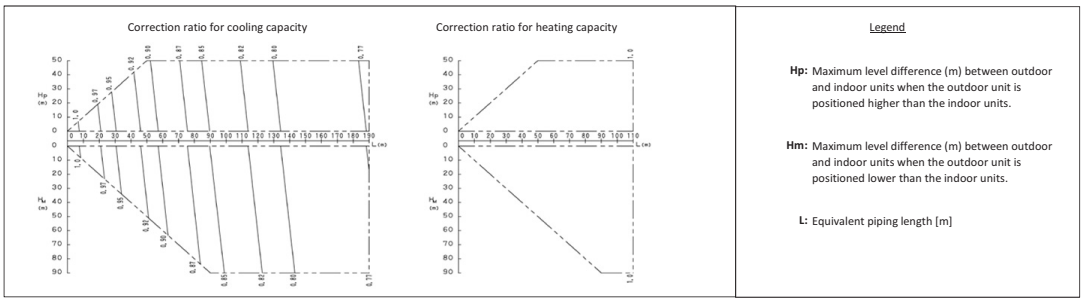

Legend

Hp: Maximum level difference (m) between outdoor and indoor units when the outdoor unit is positioned higher than the indoor units.

Hm: Maximum level difference (m) between outdoor and indoor units when the outdoor unit is positioned lower than the indoor units.

L: Equivalent piping length [m]

Notes

1. These figures illustrate the capacity correction factor due to the piping length for a standard indoor unit system at maximum load (with the thermostat set to maximum), under standard conditions.
Moreover, under partial load conditions, there is only a minor deviation for the capacity correction ratio, as shown it the above figures.

2. Method of calculating the capacity of the outdoor units.
The maximum capacity of the system will be either the total capacity of the indoor units or the maximum capacity of the outdoor units as mentioned below, whichever is less.

Indoor connection ratio ≤ 100%.

Maximum capacity of outdoor units	=	Capacity of outdoor units from capacity table at 100% connection ratio.	X	Correction ratio of piping to furthest indoor unit

Indoor connection ratio > 100%.

Maximum capacity of outdoor units	=	Capacity of outdoor units from capacity table at installed connection ratio.	X	Correction ratio of piping to furthest indoor unit

3. Main liquid pipe size increase

Model	Standard liquid side Ø	Increased liquid side Ø
8HP	9.5	12.7
22HP	15.9	19.1

For the allowed system setups and the rules for when to increase the main liquid piping diameter, refer to the installation manual.

4. Overall equivalent length

Overall equivalent length	=	Equivalent length of the main pipe	X	Correction factor	+	Equivalent length of the branch pipes

Choose the correction factor from the following table.

Model	Correction ratio for cooling capacity		Correction ratio for heating capacity	
	Standard size	Size increase	Standard size	Size increase
8HP	1	0.5	1	0.2
22HP	1	0.5	1	0.4

5. Example ·8HP·

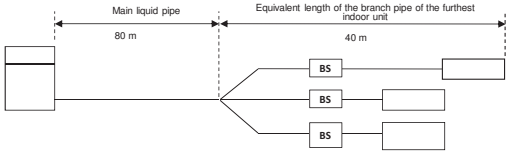

Overall equivalent length
- Cooling mode = 80 m x 0,5 + 40 m = 80 m
- Heating mode = 80 m x 0,2 + 40 m = 56 m

Capacity correction ratio (height difference = 0)
- Cooling mode = 0,86
- Heating mode = 1,0

3D088033

REYQ10T

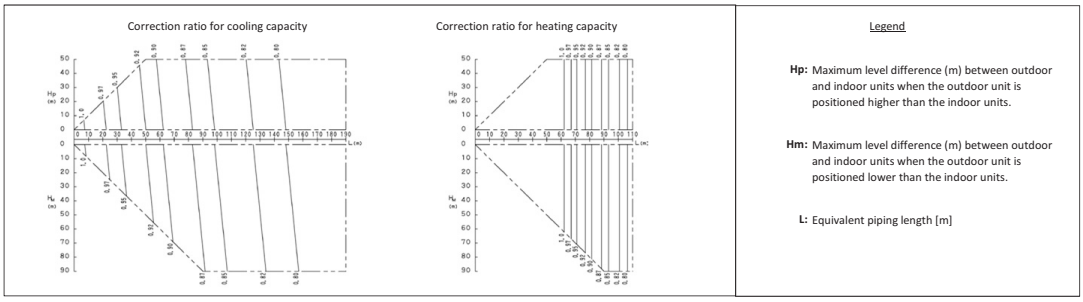

Legend

Hp: Maximum level difference (m) between outdoor and indoor units when the outdoor unit is positioned higher than the indoor units.

Hm: Maximum level difference (m) between outdoor and indoor units when the outdoor unit is positioned lower than the indoor units.

L: Equivalent piping length [m]

Notes

1. These figures illustrate the capacity correction factor due to the piping length for a standard indoor unit system at maximum load (with the thermostat set to maximum), under standard conditions.
Moreover, under partial load conditions, there is only a minor deviation for the capacity correction ratio, as shown it the above figures.

2. Method of calculating the capacity of the outdoor units.
The maximum capacity of the system will be either the total capacity of the indoor units or the maximum capacity of the outdoor units as mentioned below, whichever is less.

Indoor connection ratio ≤ 100%.

Maximum capacity of outdoor units	=	Capacity of outdoor units from capacity table at 100% connection ratio.	X	Correction ratio of piping to furthest indoor unit

Indoor connection ratio > 100%.

Maximum capacity of outdoor units	=	Capacity of outdoor units from capacity table at installed connection ratio.	X	Correction ratio of piping to furthest indoor unit

3. Main liquid pipe size increase

Model	Standard liquid side Ø	Increased liquid side Ø
10HP	9.5	12.7

For the allowed system setups and the rules for when to increase the main liquid piping diameter, refer to the installation manual.

4. Overall equivalent length

Overall equivalent length	=	Equivalent length of the main pipe	X	Correction factor	+	Equivalent length of the branch pipes

Choose the correction factor from the following table.

Model	Correction ratio for cooling capacity		Correction ratio for heating capacity	
	Standard size	Size increase	Standard size	Size increase
10HP	1	0.5	1	0.2

5. Example ·10HP·

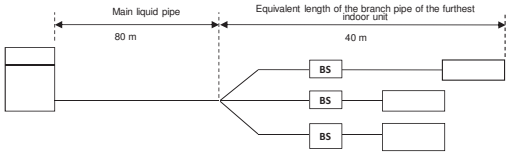

Overall equivalent length
- Cooling mode = 80 m x 0,5 + 40 m = 80 m
- Heating mode = 80 m x 0,2 + 40 m = 56 m

Capacity correction ratio (height difference = 0)
- Cooling mode = 0,88
- Heating mode = 1,0

3D088033

5 Capacity tables

5 - 3 Capacity Correction Factor

REYQ12T
REYQ18T
REYQ26T
REYQ28T
REYQ30T
REYQ38T
REYQ40T
REYQ42T
REYQ44T

Correction ratio for cooling capacity

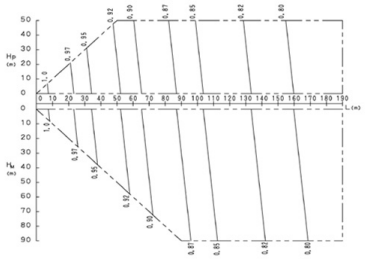

Correction ratio for heating capacity

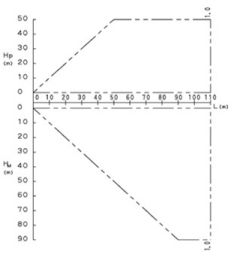

Legend

Hp: Maximum level difference (m) between outdoor and indoor units when the outdoor unit is positioned higher than the indoor units.

Hm: Maximum level difference (m) between outdoor and indoor units when the outdoor unit is positioned lower than the indoor units.

L: Equivalent piping length [m]

Notes

1. These figures illustrate the capacity correction factor due to the piping length for a standard indoor unit system at maximum load (with the thermostat set to maximum), under standard conditions. Moreover, under partial load conditions, there is only a minor deviation for the capacity correction ratio, as shown it the above figures.

2. Method of calculating the capacity of the outdoor units.
The maximum capacity of the system will be either the total capacity of the indoor units or the maximum capacity of the outdoor units as mentioned below, whichever is less.

Indoor connection ratio ≤ 100%.

Maximum capacity of outdoor units	=	Capacity of outdoor units from capacity table at 100% connection ratio.	X	Correction ratio of piping to furthest indoor unit

Indoor connection ratio > 100%.

Maximum capacity of outdoor units	=	Capacity of outdoor units from capacity table at installed connection ratio.	X	Correction ratio of piping to furthest indoor unit

3. Main liquid pipe size increase

Model	Standard liquid side Ø	Increased liquid side Ø
12HP	12.7	15.9
18HP	15.9	19.1
26+28+30+38+40+42+44HP	19.1	22.2

For the allowed system setups and the rules for when to increase the main liquid piping diameter, refer to the installation manual.

4. Overall equivalent length

Overall equivalent length	=	Equivalent length of the main pipe	X	Correction factor	+	Equivalent length of the branch pipes

Choose the correction factor from the following table.

Model	Correction ratio for cooling capacity		Correction ratio for heating capacity	
	Standard size	Size increase	Standard size	Size increase
12HP	1	0.5	1	0.3
18+26+28+30+38+40+42+44HP	1	0.5	1	0.4

5. Example ·18HP·

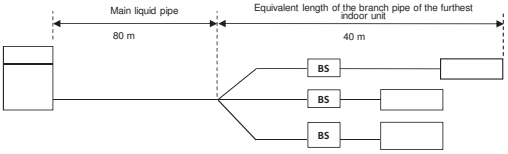

Overall equivalent length
- Cooling mode = 80 m x 0,5 + 40 m = 80 m
- Heating mode = 80 m x 0,4 + 40 m = 72 m

Capacity correction ratio (height difference = 0)
- Cooling mode = 0,88
- Heating mode = 1,0

3D088033

REYQ13T
REYQ14T

Correction ratio for cooling capacity

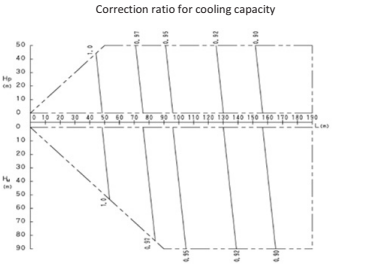

Correction ratio for heating capacity

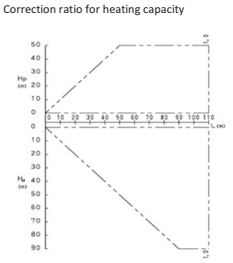

Legend

Hp: Maximum level difference (m) between outdoor and indoor units when the outdoor unit is positioned higher than the indoor units.

Hm: Maximum level difference (m) between outdoor and indoor units when the outdoor unit is positioned lower than the indoor units.

L: Equivalent piping length [m]

Notes

1. These figures illustrate the capacity correction factor due to the piping length for a standard indoor unit system at maximum load (with the thermostat set to maximum), under standard conditions. Moreover, under partial load conditions, there is only a minor deviation for the capacity correction ratio, as shown it the above figures.

2. Method of calculating the capacity of the outdoor units.
The maximum capacity of the system will be either the total capacity of the indoor units or the maximum capacity of the outdoor units as mentioned below, whichever is less.

Indoor connection ratio ≤ 100%.

Maximum capacity of outdoor units	=	Capacity of outdoor units from capacity table at 100% connection ratio.	X	Correction ratio of piping to furthest indoor unit

Indoor connection ratio > 100%.

Maximum capacity of outdoor units	=	Capacity of outdoor units from capacity table at installed connection ratio.	X	Correction ratio of piping to furthest indoor unit

3. Main liquid pipe size increase

Model	Standard liquid side Ø	Increased liquid side Ø
13+14HP	12.7	15.9

For the allowed system setups and the rules for when to increase the main liquid piping diameter, refer to the installation manual.

4. Overall equivalent length

Overall equivalent length	=	Equivalent length of the main pipe	X	Correction factor	+	Equivalent length of the branch pipes

Choose the correction factor from the following table.

Model	Correction ratio for cooling capacity		Correction ratio for heating capacity	
	Standard size	Size increase	Standard size	Size increase
13+14HP	1	0.5	1	0.3

5. Example ·14HP·

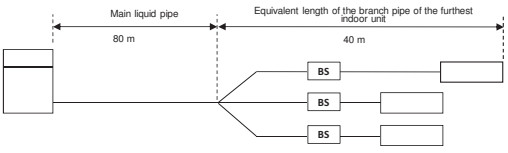

Overall equivalent length
- Cooling mode = 80 m x 0,5 + 40 m = 80 m
- Heating mode = 80 m x 0,3 + 40 m = 64 m

Capacity correction ratio (height difference = 0)
- Cooling mode = 0,96
- Heating mode = 1,0

3D088033

5 Capacity tables

5 - 3 Capacity Correction Factor

REYQ16T

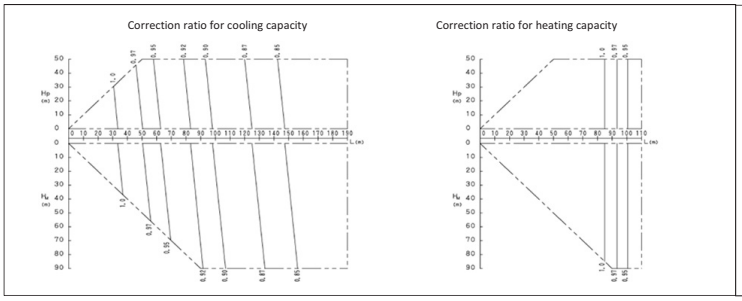

Legend

Hp: Maximum level difference (m) between outdoor and indoor units when the outdoor unit is positioned higher than the indoor units.

Hm: Maximum level difference (m) between outdoor and indoor units when the outdoor unit is positioned lower than the indoor units.

L: Equivalent piping length [m]

Notes

1. These figures illustrate the capacity correction factor due to the piping length for a standard indoor unit system at maximum load (with the thermostat set to maximum), under standard conditions. Moreover, under partial load conditions, there is only a minor deviation for the capacity correction ratio, as shown it the above figures.

2. Method of calculating the capacity of the outdoor units.
The maximum capacity of the system will be either the total capacity of the indoor units or the maximum capacity of the outdoor units as mentioned below, whichever is less.

Indoor connection ratio ≤ 100%.

Maximum capacity of outdoor units	=	Capacity of outdoor units from capacity table at 100% connection ratio.	X	Correction ratio of piping to furthest indoor unit

Indoor connection ratio > 100%.

Maximum capacity of outdoor units	=	Capacity of outdoor units from capacity table at installed connection ratio.	X	Correction ratio of piping to furthest indoor unit

3. Main liquid pipe size increase

Model	Standard liquid side Ø	Increased liquid side Ø
16HP	12.7	15.9

For the allowed system setups and the rules for when to increase the main liquid piping diameter, refer to the installation manual.

4. Overall equivalent length

Overall equivalent length	=	Equivalent length of the main pipe	X	Correction factor	+	Equivalent length of the branch pipes

Choose the correction factor from the following table.

Model	Correction ratio for cooling capacity		Correction ratio for heating capacity	
	Standard size	Size increase	Standard size	Size increase
16HP	1	0.5	1	0.3

5. Example ·16HP·

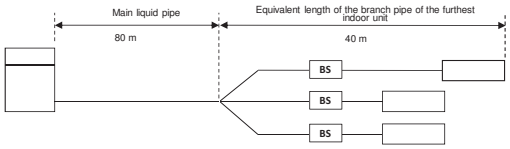

Overall equivalent length
- Cooling mode = 80 m x 0,5 + 40 m = 80 m
- Heating mode = 80 m x 0,3 + 40 m = 64 m

Capacity correction ratio (height difference = 0)
- Cooling mode = 0,93
- Heating mode = 1,0

3D088033

REYQ20T
REYQ32T
REYQ34T

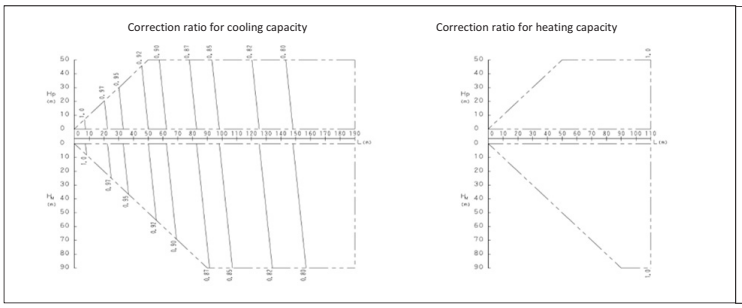

Legend

Hp: Maximum level difference (m) between outdoor and indoor units when the outdoor unit is positioned higher than the indoor units.

Hm: Maximum level difference (m) between outdoor and indoor units when the outdoor unit is positioned lower than the indoor units.

L: Equivalent piping length [m]

Notes

1. These figures illustrate the capacity correction factor due to the piping length for a standard indoor unit system at maximum load (with the thermostat set to maximum), under standard conditions. Moreover, under partial load conditions, there is only a minor deviation for the capacity correction ratio, as shown it the above figures.

2. Method of calculating the capacity of the outdoor units.
The maximum capacity of the system will be either the total capacity of the indoor units or the maximum capacity of the outdoor units as mentioned below, whichever is less.

Indoor connection ratio ≤ 100%.

Maximum capacity of outdoor units	=	Capacity of outdoor units from capacity table at 100% connection ratio.	X	Correction ratio of piping to furthest indoor unit

Indoor connection ratio > 100%.

Maximum capacity of outdoor units	=	Capacity of outdoor units from capacity table at installed connection ratio.	X	Correction ratio of piping to furthest indoor unit

3. Main liquid pipe size increase

Model	Standard liquid side Ø	Increased liquid side Ø
20HP	15.9	19.1
32+34HP	19.1	22.2

For the allowed system setups and the rules for when to increase the main liquid piping diameter, refer to the installation manual.

4. Overall equivalent length

Overall equivalent length	=	Equivalent length of the main pipe	X	Correction factor	+	Equivalent length of the branch pipes

Choose the correction factor from the following table.

Model	Correction ratio for cooling capacity		Correction ratio for heating capacity	
	Standard size	Size increase	Standard size	Size increase
20+32+34HP	1	0.5	1	0.4

5. Example ·20HP·

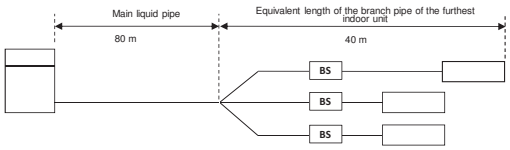

Overall equivalent length
- Cooling mode = 80 m x 0,5 + 40 m = 80 m
- Heating mode = 80 m x 0,4 + 40 m = 72 m

Capacity correction ratio (height difference = 0)
- Cooling mode = 0,88
- Heating mode = 1,0

3D088033

5 Capacity tables

5 - 3 Capacity Correction Factor

REYQ24T

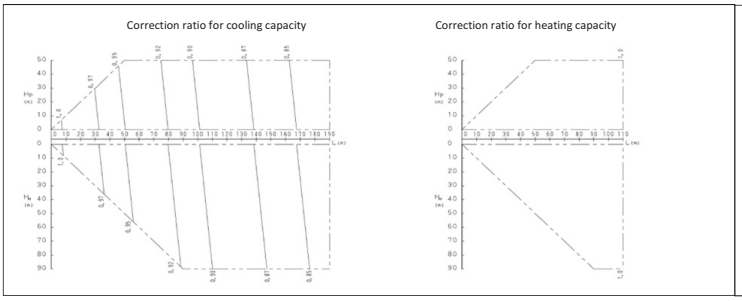

Legend

Hp: Maximum level difference (m) between outdoor and indoor units when the outdoor unit is positioned higher than the indoor units.

Hm: Maximum level difference (m) between outdoor and indoor units when the outdoor unit is positioned lower than the indoor units.

L: Equivalent piping length [m]

Notes

1. These figures illustrate the capacity correction factor due to the piping length for a standard indoor unit system at maximum load (with the thermostat set to maximum), under standard conditions. Moreover, under partial load conditions, there is only a minor deviation for the capacity correction ratio, as shown it the above figures.

2. Method of calculating the capacity of the outdoor units.
The maximum capacity of the system will be either the total capacity of the indoor units or the maximum capacity of the outdoor units as mentioned below, whichever is less.

Indoor connection ratio ≤ 100%.

Maximum capacity of outdoor units	=	Capacity of outdoor units from capacity table at 100% connection ratio.	X	Correction ratio of piping to furthest indoor unit

Indoor connection ratio > 100%.

Maximum capacity of outdoor units	=	Capacity of outdoor units from capacity table at installed connection ratio.	X	Correction ratio of piping to furthest indoor unit

3. Main liquid pipe size increase

Model	Standard liquid side Ø	Increased liquid side Ø
24HP	15.9	19.1

For the allowed system setups and the rules for when to increase the main liquid piping diameter, refer to the installation manual.

4. Overall equivalent length

Overall equivalent length	=	Equivalent length of the main pipe	X	Correction factor	+	Equivalent length of the branch pipes

Choose the correction factor from the following table.

Model	Correction ratio for cooling capacity		Correction ratio for heating capacity	
	Standard size	Size increase	Standard size	Size increase
24HP	1	0.5	1	0.4

5. Example ·24HP·

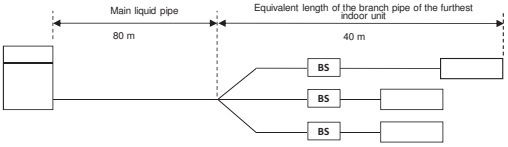

Overall equivalent length
- Cooling mode = 80 m x 0,5 + 40 m = 80 m
- Heating mode = 80 m x 0,4 + 40 m = 72 m

Capacity correction ratio (height difference = 0)
- Cooling mode = 0,93
- Heating mode = 1,0

3D088033

REYQ36T

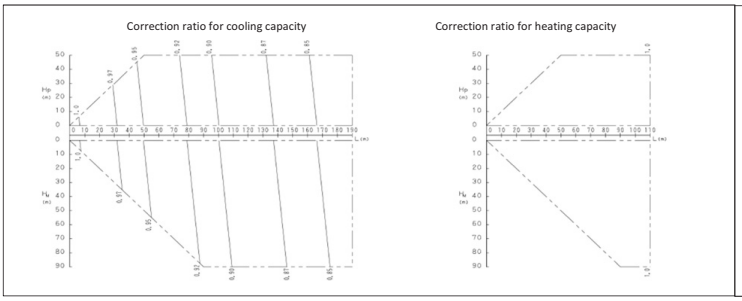

Legend

Hp: Maximum level difference (m) between outdoor and indoor units when the outdoor unit is positioned higher than the indoor units.

Hm: Maximum level difference (m) between outdoor and indoor units when the outdoor unit is positioned lower than the indoor units.

L: Equivalent piping length [m]

Notes

1. These figures illustrate the capacity correction factor due to the piping length for a standard indoor unit system at maximum load (with the thermostat set to maximum), under standard conditions. Moreover, under partial load conditions, there is only a minor deviation for the capacity correction ratio, as shown it the above figures.

2. Method of calculating the capacity of the outdoor units.
The maximum capacity of the system will be either the total capacity of the indoor units or the maximum capacity of the outdoor units as mentioned below, whichever is less.

Indoor connection ratio ≤ 100%.

Maximum capacity of outdoor units	=	Capacity of outdoor units from capacity table at 100% connection ratio.	X	Correction ratio of piping to furthest indoor unit

Indoor connection ratio > 100%.

Maximum capacity of outdoor units	=	Capacity of outdoor units from capacity table at installed connection ratio.	X	Correction ratio of piping to furthest indoor unit

3. Main liquid pipe size increase

Model	Standard liquid side Ø	Increased liquid side Ø
36HP	19.1	22.2

For the allowed system setups and the rules for when to increase the main liquid piping diameter, refer to the installation manual.

4. Overall equivalent length

Overall equivalent length	=	Equivalent length of the main pipe	X	Correction factor	+	Equivalent length of the branch pipes

Choose the correction factor from the following table.

Model	Correction ratio for cooling capacity		Correction ratio for heating capacity	
	Standard size	Size increase	Standard size	Size increase
36HP	1	0.5	1	0.4

5. Example ·36HP·

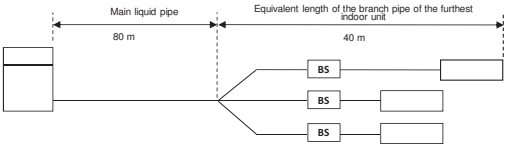

Overall equivalent length
- Cooling mode = 80 m x 0,5 + 40 m = 80 m
- Heating mode = 80 m x 0,4 + 40 m = 72 m

Capacity correction ratio (height difference = 0)
- Cooling mode = 0,92
- Heating mode = 1,0

3D088033

5 Capacity tables

5 - 3 Capacity Correction Factor

REYQ46T

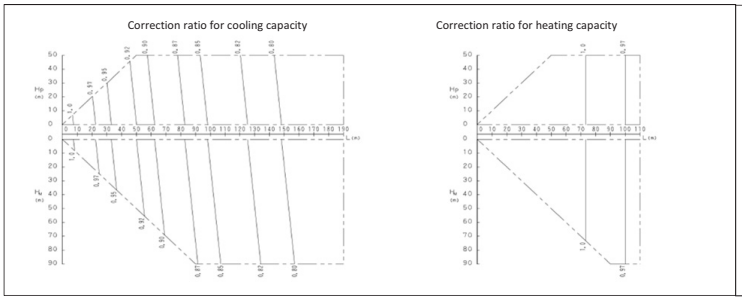

Legend

Hp: Maximum level difference (m) between outdoor and indoor units when the outdoor unit is positioned higher than the indoor units.

Hm: Maximum level difference (m) between outdoor and indoor units when the outdoor unit is positioned lower than the indoor units.

L: Equivalent piping length [m]

Notes

1. These figures illustrate the capacity correction factor due to the piping length for a standard indoor unit system at maximum load (with the thermostat set to maximum), under standard conditions. Moreover, under partial load conditions, there is only a minor deviation for the capacity correction ratio, as shown it the above figures.

2. Method of calculating the capacity of the outdoor units.
The maximum capacity of the system will be either the total capacity of the indoor units or the maximum capacity of the outdoor units as mentioned below, whichever is less.

Indoor connection ratio ≤ 100%.

Maximum capacity of outdoor units	=	Capacity of outdoor units from capacity table at 100% connection ratio.	X	Correction ratio of piping to furthest indoor unit

Indoor connection ratio > 100%.

Maximum capacity of outdoor units	=	Capacity of outdoor units from capacity table at installed connection ratio.	X	Correction ratio of piping to furthest indoor unit

3. Main liquid pipe size increase

Model	Standard liquid side Ø	Increased liquid side Ø
46HP	19.1	22.2

For the allowed system setups and the rules for when to increase the main liquid piping diameter, refer to the installation manual.

4. Overall equivalent length

Overall equivalent length	=	Equivalent length of the main pipe	X	Correction factor	+	Equivalent length of the branch pipes

Choose the correction factor from the following table.

Model	Correction ratio for cooling capacity		Correction ratio for heating capacity	
	Standard size	Size increase	Standard size	Size increase
46HP	1	0.5	1	0.4

5. Example ·46HP·

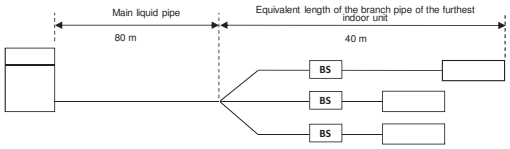

Overall equivalent length
- Cooling mode = 80 m x 0,5 + 40 m = 80 m
- Heating mode = 80 m x 0,4 + 40 m = 72 m

Capacity correction ratio (height difference = 0)
- Cooling mode = 0,88
- Heating mode = 1,0

3D088033

REYQ48T
REYQ50T
REYQ52T
REYQ54T

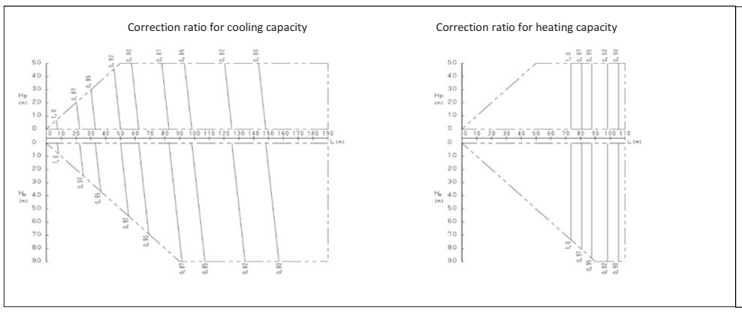

Legend

Hp: Maximum level difference (m) between outdoor and indoor units when the outdoor unit is positioned higher than the indoor units.

Hm: Maximum level difference (m) between outdoor and indoor units when the outdoor unit is positioned lower than the indoor units.

L: Equivalent piping length [m]

Notes

1. These figures illustrate the capacity correction factor due to the piping length for a standard indoor unit system at maximum load (with the thermostat set to maximum), under standard conditions. Moreover, under partial load conditions, there is only a minor deviation for the capacity correction ratio, as shown it the above figures.

2. Method of calculating the capacity of the outdoor units.
The maximum capacity of the system will be either the total capacity of the indoor units or the maximum capacity of the outdoor units as mentioned below, whichever is less.

Indoor connection ratio ≤ 100%.

Maximum capacity of outdoor units	=	Capacity of outdoor units from capacity table at 100% connection ratio.	X	Correction ratio of piping to furthest indoor unit

Indoor connection ratio > 100%.

Maximum capacity of outdoor units	=	Capacity of outdoor units from capacity table at installed connection ratio.	X	Correction ratio of piping to furthest indoor unit

3. Main liquid pipe size increase

Model	Standard liquid side Ø	Increased liquid side Ø
48~54HP	19.1	22.2

For the allowed system setups and the rules for when to increase the main liquid piping diameter, refer to the installation manual.

4. Overall equivalent length

Overall equivalent length	=	Equivalent length of the main pipe	X	Correction factor	+	Equivalent length of the branch pipes

Choose the correction factor from the following table.

Model	Correction ratio for cooling capacity		Correction ratio for heating capacity	
	Standard size	Size increase	Standard size	Size increase
48~54HP	1	0.5	1	0.4

5. Example ·48HP·

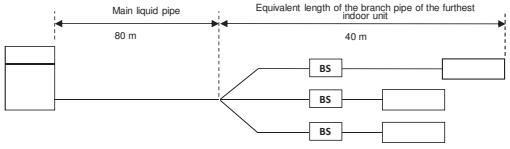

Overall equivalent length
- Cooling mode = 80 m x 0,5 + 40 m = 80 m
- Heating mode = 80 m x 0,4 + 40 m = 72 m

Capacity correction ratio (height difference = 0)
- Cooling mode = 0,88
- Heating mode = 1,0

3D088033

6 Dimensional drawings

6 - 1 Dimensional Drawings

REMQ5T
REYQ8-12T

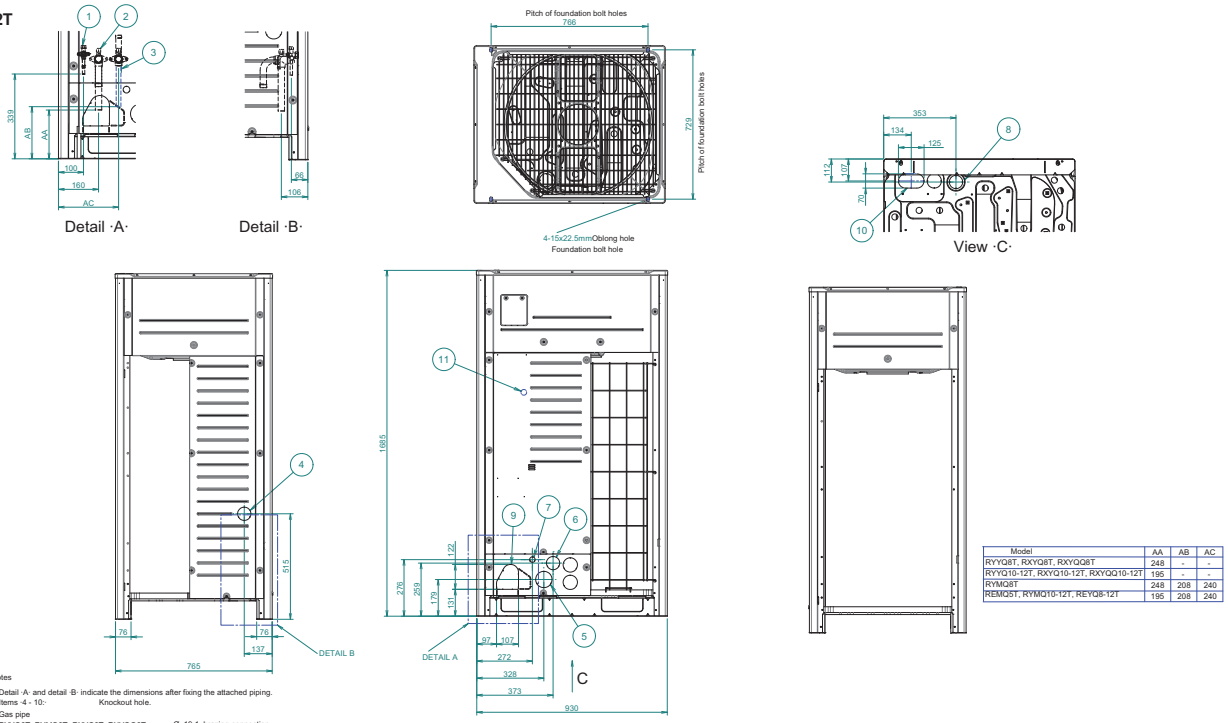

Model	AA	AB	AC
RYYQ8T, RXYQ8T, RXYQQ8T	248	-	-
RYYQ10-12T, RXYQ10-12T, RXYQQ10-12T	195	-	-
RYMQ8T	248	208	240
REMQ5T, RYMQ10-12T, REYQ8-12T	195	208	240

Notes

1. Detail ·A· and detail ·B· indicate the dimensions after fixing the attached piping.
2. Items ·4 - 10·: Knockout hole.
3. Gas pipe
   RYYQ8T, RYMQ8T, RXYQ8T, RXYQQ8T : Ø ·19.1· brazing connection
   RYYQ10T, RYMQ10T, RXYQ10T, RXYQQ10T : Ø ·22.2· brazing connection
   REMQ5T, REYQ8-12T : Ø ·25.4· brazing connection
   RYYQ12T, RYMQ12T, RXYQ12T, RXYQQ12T : Ø ·28.6· brazing connection
   Liquid pipe
   RYYQ8-10T, RYMQ8-10T, RXYQ8-10T, RXYQQ8-10T, REMQ5T, REYQ8-12T : Ø ·9.5· brazing connection
   RYYQ12T, RYMQ12T, RXYQ12T, RXYQQ12T : Ø ·12.7· brazing connection
   Equalising pipe
   RYMQ8-10T : Ø ·19.1· brazing connection
   RYMQ12T : Ø ·22.2· brazing connection
   High pressure/low pressure gas pipe
   REMQ5T, REYQ8-12T : Ø ·19.1· brazing connection

No.	Part name	Remark
11	Grounding terminal	Inside of the switch box (M8)
10	Pipe routing hole (bottom)	
9	Pipe routing hole (front)	
8	Power cord routing hole (bottom)	Ø65
7	Power cord routing hole (front)	Ø27
6	Power cord routing hole (front)	Ø65
5	Power cord routing hole (front)	Ø60
4	Power cord routing hole (side)	Ø65
3	Equalising pipe connection port High pressure/low pressure gas pipe	See note ·3·.
2	Gas pipe connection port	See note ·3·.
1	Liquid pipe connection port	See note ·3·.

2D079532B

REYQ14-20T

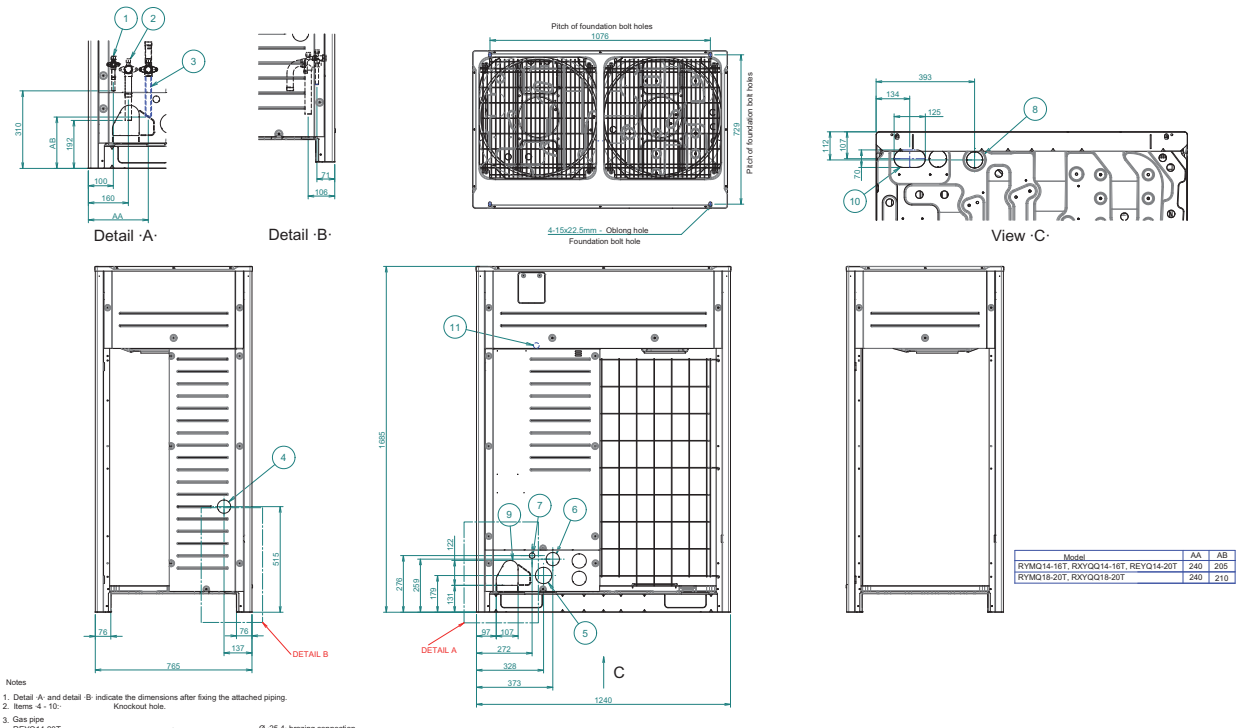

Model	AA	AB
RYMQ14-16T, RXYQQ14-16T, REYQ14-20T	240	205
RYMQ18-20T, RXYQQ18-20T	240	210

Notes

1. Detail ·A· and detail ·B· indicate the dimensions after fixing the attached piping.
2. Items ·4 - 10·: Knockout hole.
3. Gas pipe
   REYQ14-20T : Ø ·25.4· brazing connection
   RYYQ14-20T, RYMQ14-20T, RXYQ14-20T, RXYQQ14-20T : Ø ·28.6· brazing connection
   Liquid pipe
   RYYQ14-16T, RYMQ14-16T, RXYQ14-16T, RXYQQ14-16T, REYQ14-20T : Ø ·12.7· brazing connection
   RYYQ18-20T, RYMQ18-20T, RXYQ18-20T, RXYQQ18-20T : Ø ·15.9· brazing connection
   Equalising pipe
   RYMQ14-16T : Ø ·22.2· brazing connection
   RYMQ18-20T : Ø ·28.6· brazing connection
   High pressure/low pressure gas pipe
   REYQ14-20T : Ø ·22.2· brazing connection

No.	Part name	Remark
11	Grounding terminal	Inside of the switch box (M8)
10	Pipe routing hole (bottom)	
9	Pipe routing hole (front)	
8	Power cord routing hole (bottom)	Ø65
7	Power cord routing hole (front)	Ø27
6	Power cord routing hole (front)	Ø65
5	Power cord routing hole (front)	Ø60
4	Power cord routing hole (side)	Ø65
3	Equalising pipe connection port High pressure/low pressure gas pipe	See note ·3·.
2	Gas pipe connection port	See note ·3·.
1	Liquid pipe connection port	See note ·3·.

2D079533B

7 Centre of gravity

7 - 1 Centre of Gravity

REMQ5T
REYQ8-12T

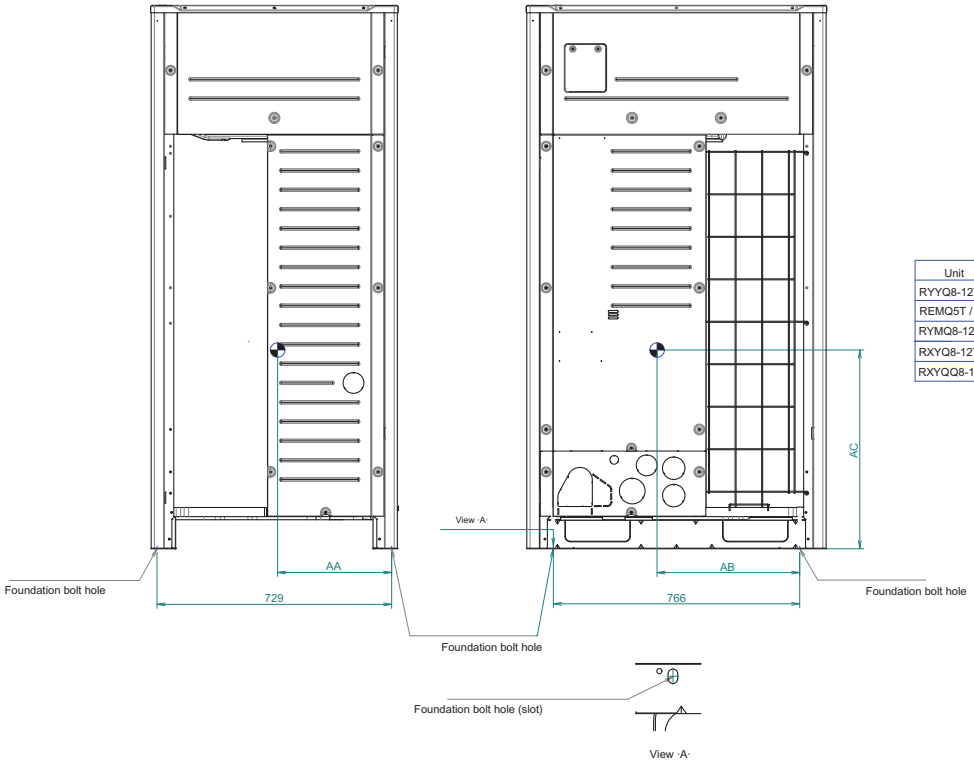

Unit	AA	AB	AC
RYYQ8-12T	328	366	565
REMQ5T / REYQ8-12T			
RYMQ8-12T	354	443	565
RXYQ8-12T	339	448	565
RXYQQ8-12T			

3D079582B

REYQ14-20T

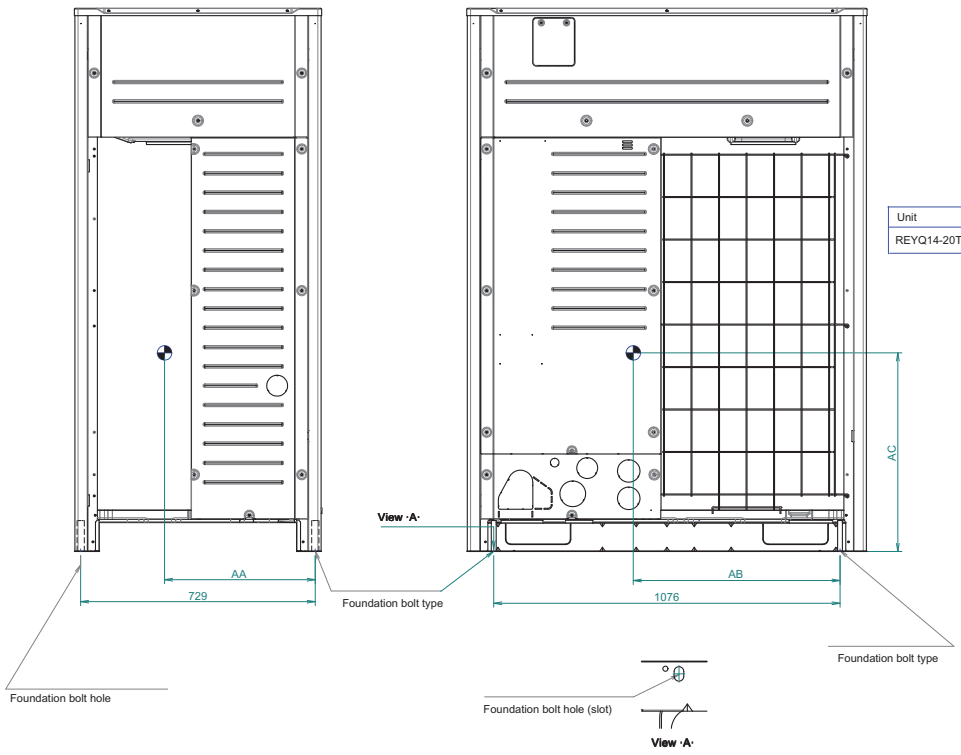

Unit	AA	AB	AC
REYQ14-20T	334	470	610

3D079583B

8 Piping diagrams

8 - 1 Piping Diagrams

REYQ8-12T

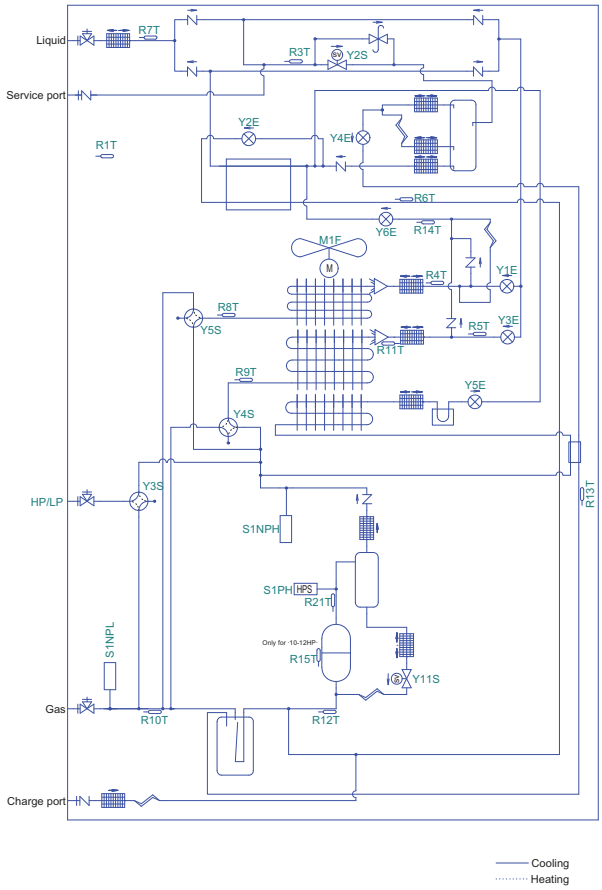

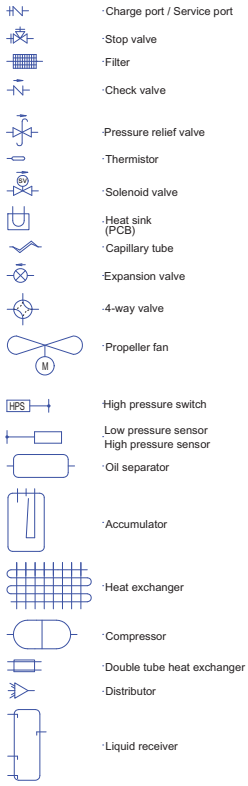

3D088100A

REYQ14-20T

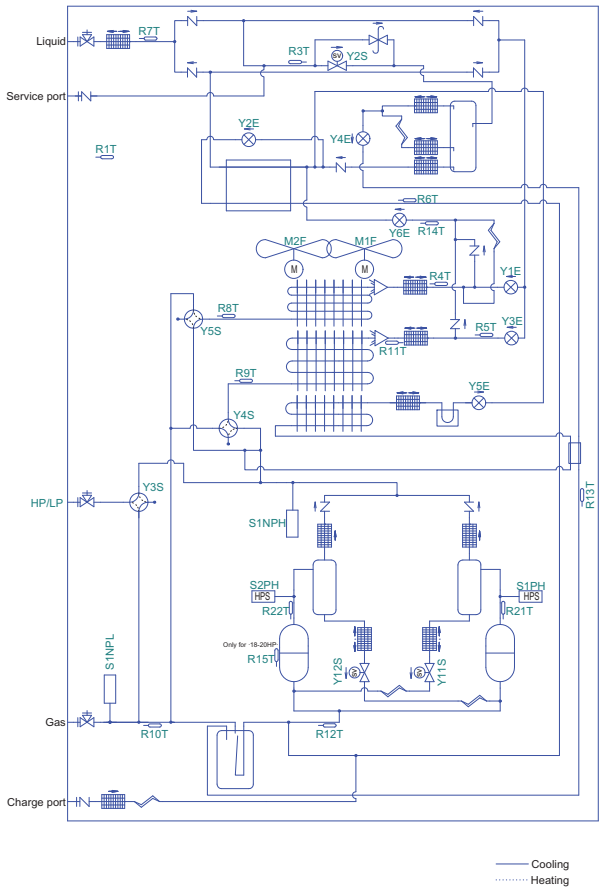

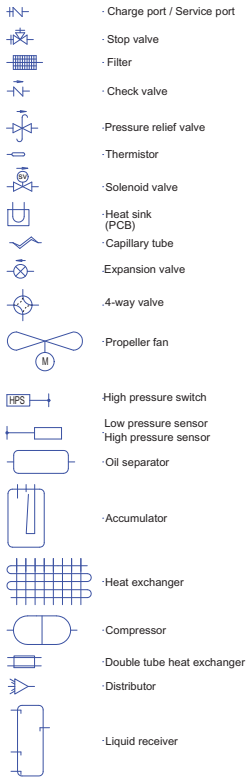

3D088099A

9 Wiring diagrams

9 - 1 Wiring Diagrams - Single Phase

REMQ5T7Y1B
REYQ8T7Y1B

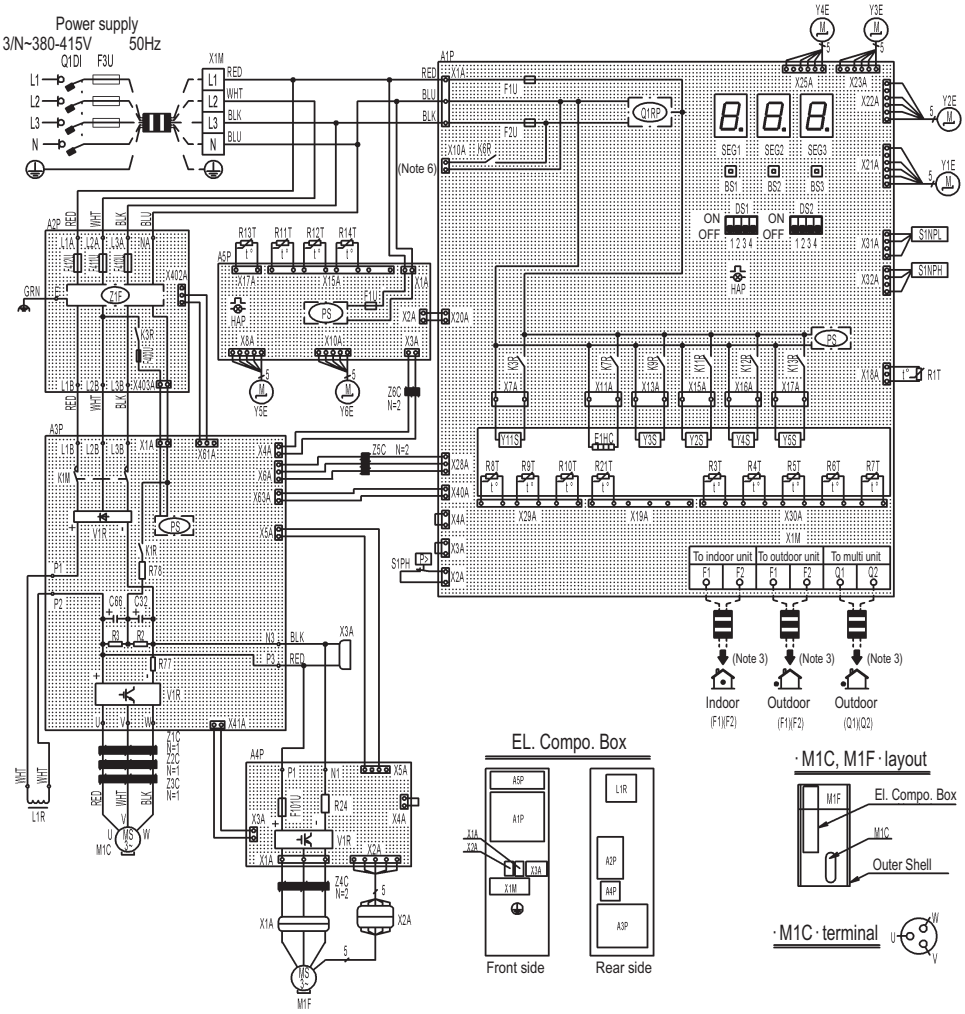

2D087541A

A1P	Printed Circuit Board (main)	K13R	Magnetic Relay (Y5S) (A1P)	SEG1~SEG3	7-Segment Display (A1P)
A2P	Printed Circuit Board (noise filter)	L1R	Reactor	V1R	Power Module (A3P) (A4P)
A3P	Printed Circuit Board (inv)	M1C	Motor (Compressor)	X1A, X2A	Connector (M1F)
A4P	Printed Circuit Board (fan)	M1F	Motor (Fan)	X3A	Connector (check the residual charge)
A5P	Printed Circuit Board (sub)	PS	Switching Power Supply (A1P) (A3P) (A5P)	X1M	Terminal Block (Power Supply)
BS1~3	Push Button Switch (A1P) (Mode, Set, Return)	Q1DI	Field Earth Leakage Breaker	X1M	Terminal Block (Control) (A1P)
		Q1RP	Phase Reversal Detect Circuit (A1P)	Y1E	Electronic Expansion Valve (Heat Exc. Upper)
C66, C32	Capacitor (A3P)	R1T	Thermistor (Air) (A1P)	Y2E	Electronic Expansion Valve (Subcool Heat Exc.)
DS1, DS2	DIP Switch (A1P)	R21T	Thermistor (M1C Discharge) (A1P)	Y3E	Electronic Expansion Valve (Heat Exc. Lower)
E1HC	Crankcase Heater	R3T	Thermistor (Liq. Main) (A1P)	Y4E	Electronic Expansion Valve (Receiver Gas)
F1U, F2U	Fuse (T, 3,15A , 250V) (A1P)	R4T	Thermistor (Heat Exc. Liq. Upper) (A1P)	Y5E	Electronic Expansion Valve (Inverter Cooling)
F1U	Fuse (T, 3,15A , 250V) (A5P)	R5T	Thermistor (Heat Exc. Liq. Lower) (A1P)	Y6E	Electronic Expansion Valve (Auto Charge)
F101U	Fuse (A4P)	R6T	Thermistor (Subcool Heat Exc. Gas) (A1P)	Y11S	Solenoid Valve (M1C Oil Return)
F3U	Field Fuse	R7T	Thermistor (Subcool Heat Exc. Liq) (A1P)	Y2S	Solenoid Valve (Liq. Pipe)
F410U~F412U	Fuse (A2P)	R8T	Thermistor (Heat Exc. Gas Upper) (A1P)	Y3S	Solenoid Valve (HP/LP Gas Pipe)
F400U	Fuse (A2P)	R9T	Thermistor (Heat Exc. Gas Lower) (A1P)	Y4S	Solenoid Valve (Heat Exc. Lower)
HAP	Pilotlamp (A1P) (A5P) (Service monitor-green)	R10T	Thermistor (Suction) (A1P)	Y5S	Solenoid Valve (Heat Exc. Upper)
		R11T	Thermistor (Heat Exc. Deicer) (A5P)	Z1C~Z6C	Noise Filter (Ferrite Core)
K1M	Magnetic Contactor (A3P)	R12T	Thermistor (Suction Compressor) (A5P)	Z1F	Noise Filter (A2P) (With Surge Absorber)
K1R	Magnetic Relay (A3P)	R13T	Thermistor (Receiver Gas) (A5P)		
K3R	Magnetic Relay (A2P)	R14T	Thermistor (Auto Charge) (A5P)		
K3R	Magnetic Relay (Y11S) (A1P)	R78	Resistor (Current Limiting) (A3P)	Connector for Optional Accessories	
K6R	Magnetic Relay (Optional Bottomplate Heater) (A1P)	R24	Resistor (Current Sensor) (A4P)	X10A	Connector (Bottom plate Heater)
		R77	Resistor (Current Sensor) (A3P)		
K7R	Magnetic Relay (E1HC) (A1P)	R3, R2	Resistor (A3P)		
K9R	Magnetic Relay (Y3S) (A1P)	S1NPH	Pressure Sensor (High)		
K11R	Magnetic Relay (Y2S) (A1P)	S1NPL	Pressure Sensor (Low)		
K12R	Magnetic Relay (Y4S) (A1P)	S1PH	Pressure Switch (High)		

NOTES

1. This wiring diagram applies only to the outdoor unit.
2. :field wiring, : terminal block, : connector, : terminal, : Protective Earth (Screw).
3. For connection wiring to indoor-outdoor transmission F1-F2, outdoor-outdoor transmission F1-F2, outdoor-multi transmission Q1-Q2, refer to the installation manual.
4. When operating, don't shortcircuit the protection device (S1PH)
5. Colors BLK:BLACK; RED: RED; BLU; BLUE; WHT: WHITE; GRN: GREEN.
6. When using the optional accessory, refer to the installation manual of the optional accessory.

9 Wiring diagrams

9 - 1 Wiring Diagrams - Single Phase

REYQ10,12T7Y1B

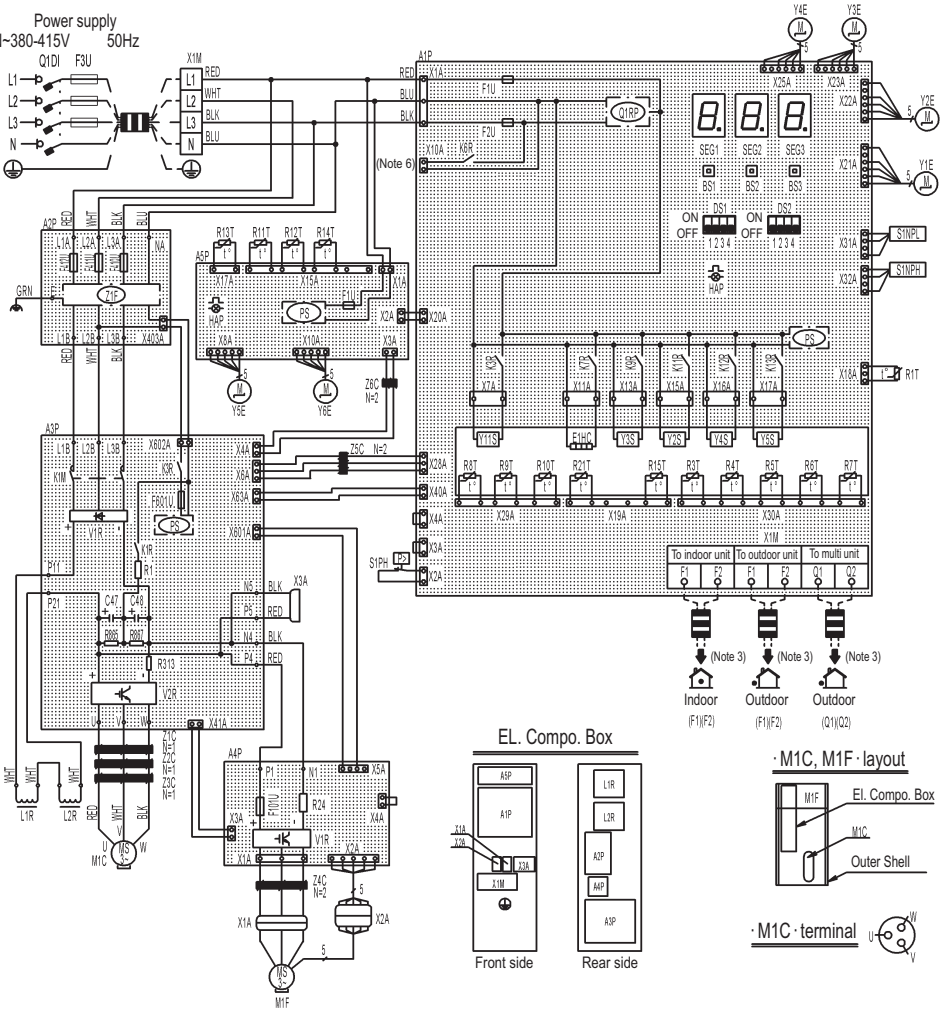

2D087155A

A1P	Printed Circuit Board (main)	K13R	Magnetic Relay (Y5S) (A1P)	S1PH	Pressure Switch (High)
A2P	Printed Circuit Board (noise filter)	L1R, L2R	Reactor	SEG1~SEG3	7-Segment Display (A1P)
A3P	Printed Circuit Board (inv)	M1C	Motor (Compressor)	V1R	Power Module (A3P) (A4P)
A4P	Printed Circuit Board (fan)	M1F	Motor (Fan)	V2R	Power Module (A3P)
A5P	Printed Circuit Board (sub)	PS	Switching Power Supply (A1P) (A3P) (A5P)	X1A, X2A	Connector (M1F)
BS1~3	Push Button Switch (A1P)	Q1DI	Field Earth Leakage Breaker	X3A	Connector (check the residual charge)
	(Mode, Set, Return)	Q1RP	Phase Reversal Detect Circuit (A1P)	X1M	Terminal Block (Power Supply)
C47, C48	Capacitor (A3P)	R1T	Thermistor (Air) (A1P)	X1M	Terminal Block (Control) (A1P)
DS1, DS2	DIP Switch (A1P)	R21T	Thermistor (M1C Discharge) (A1P)	Y1E	Electronic Expansion Valve (Heat Exc. Upper)
E1HC	Crankcase Heater	R3T	Thermistor (Liq. Main) (A1P)	Y2E	Electronic Expansion Valve (Subcool Heat Exc.)
F1U, F2U	Fuse (T, 3,15A , 250V) (A1P)	R4T	Thermistor (Heat Exc. Liq. Upper) (A1P)	Y3E	Electronic Expansion Valve (Heat Exc. Lower)
F1U	Fuse (T, 3,15A , 250V) (A5P)	R5T	Thermistor (Heat Exc. Liq. Lower) (A1P)	Y4E	Electronic Expansion Valve (Receiver Gas)
F101U	Fuse (A4P)	R6T	Thermistor (Subcool Heat Exc. Gas) (A1P)	Y5E	Electronic Expansion Valve (Inverter Cooling)
F3U	Field Fuse	R7T	Thermistor (Subcool Heat Exc. Liq) (A1P)	Y6E	Electronic Expansion Valve (Auto Charge)
F410U~F412U	Fuse (A2P)	R8T	Thermistor (Heat Exc. Gas Upper) (A1P)	Y11S	Solenoid Valve (M1C Oil Return)
F601U	Fuse (A3P)	R9T	Thermistor (Heat Exc. Gas Lower) (A1P)	Y2S	Solenoid Valve (Liq. Pipe)
HAP	Pilotlamp (A1P) (A5P)	R10T	Thermistor (Suction) (A1P)	Y3S	Solenoid Valve (HP/LP Gas Pipe)
	(Service monitor-green)	R11T	Thermistor (Heat Exc. Deicer) (A5P)	Y4S	Solenoid Valve (Heat Exc. Lower)
K1M	Magnetic Contactor (A3P)	R12T	Thermistor (Suction Compressor) (A5P)	Y5S	Solenoid Valve (Heat Exc. Upper)
K1R	Magnetic Relay (A3P)	R13T	Thermistor (Receiver Gas) (A5P)	Z1C~Z6C	Noise Filter (Ferrite Core)
K3R	Magnetic Relay (A3P)	R14T	Thermistor (Auto Charge) (A5P)	Z1F	Noise Filter (A2P)
K3R	Magnetic Relay (Y11S) (A1P)	R15T	Thermistor (Compressor Body) (A1P)		(With Surge Absorber)
K6R	Magnetic Relay	R1	Resistor (Current Limiting) (A3P)		
	(Optional Bottomplate Heater) (A1P)	R24	Resistor (Current Sensor) (A4P)		
K7R	Magnetic Relay (E1HC) (A1P)	R313	Resistor (Current Sensor) (A3P)	Connector for Optional Accessories	
K9R	Magnetic Relay (Y3S) (A1P)	R865, R867	Resistor (A3P)	X10A	Connector (Bottomplate Heater)
K11R	Magnetic Relay (Y2S) (A1P)	S1NPH	Pressure Sensor (High)		
K12R	Magnetic Relay (Y4S) (A1P)	S1NPL	Pressure Sensor (Low)		

NOTES

1. This wiring diagram applies only to the outdoor unit.
2. ==▮▮== :field wiring, ▭▭▭▭ : terminal block, ▭▭ : connector, -○-: terminal, ⏚ : Protective Earth (Screw).
3. For connection wiring to indoor-outdoor transmission F1-F2, outdoor-outdoor transmission F1-F2, outdoor-multi transmission Q1-Q2, refer to the installation manual.
4. When operating, don't shortcircuit the protection device (S1PH)
5. Colors BLK:BLACK; RED: RED; BLU; BLUE; WHT: WHITE; GRN: GREEN.
6. When using the optional accessory, refer to the installation manual of the optional accessory.

9 Wiring diagrams

9 - 1 Wiring Diagrams - Single Phase

REYQ14,8T7Y1B

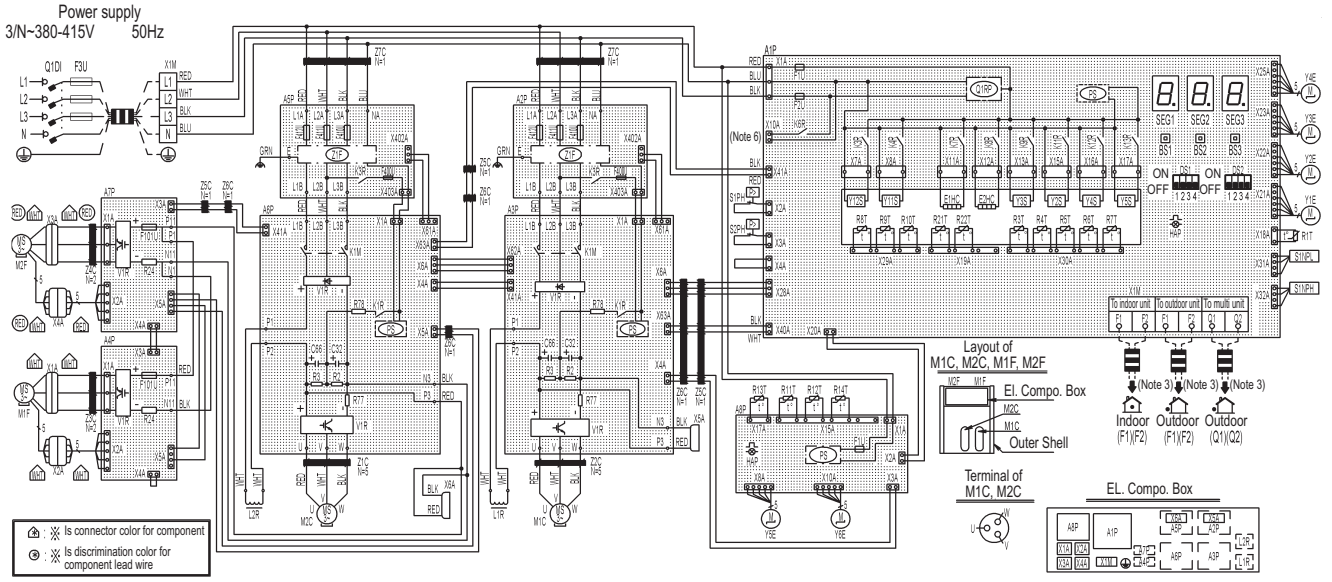

2D087542A

A1P	Printed Circuit Board (main)	K13R	Magnetic Relay (Y5S) (A1P)	V1R	Power Module (A3P) (A6P)
A2P, A5P	Printed Circuit Board (noise filter)	L1R~L2R	Reactor	V1R	Power Module (A4P (A7P)
A3P, A6P	Printed Circuit Board (inv)	M1C, M2C	Motor (Compressor)	X1A~4A	Connector (M1F, M2F)
A4P, A7P	Printed Circuit Board (fan)	M1F, M2F	Motor (Fan)	X5A, X6A	Connector (Residual Charge Check)
A8P	Printed Circuit Board (sub)	PS	Switching Power Supply (A1P) (A3P) (A6P) (A8P)	X1M	Terminal Block (Power Supply)
BS1~3	Push Button Switch (A1P) (Mode, Set, Return)			X1M	Terminal Block (Control) (A1P)
		Q1DI	Field Earth Leakage Breaker	Y1E	Electronic Expansion Valve (Heat Exc. Upper)
C32, C66	Capacitor (A3P) (A6P)	Q1RP	Phase Reversal Detect Circuit (A1P)	Y2E	Electronic Expansion Valve (Subcool Heat Exc.)
DS1, DS2	DIP Switch (A1P)	R2, R3	Resistor (A3P) (A6P)		
E1HC, E2HC	Crankcase Heater	R24	Resistor (Current Sensor) (A4P) (A7P)	Y3E	Electronic Expansion Valve (Heat Exc. Lower)
F1U, F2U	Fuse (T, 3,15A , 250V) (A1P)	R77	Resistor (Current Sensor) (A3P) (A6P)	Y4E	Electronic Expansion Valve (Receiver Gas)
F1U	Fuse (T, 3,15A , 250V) (A8P)	R78	Resistor (Current Limiting) (A3P) (A6P)	Y5E	Electronic Expansion Valve (Inverter Cooling)
F3U	Field Fuse	R1T	Thermistor (Air) (A1P)	Y6E	Electronic Expansion Valve (Auto Charge)
F101U	Fuse (A4P) (A7P)	R21T, R22T	Thermistor (M1C, M2C Discharge) (A1P)	Y11S	Solenoid Valve (Oil Return M1C)
F400U	Fuse (A2P) (A5P)	R3T	Thermistor (Liq. Main) (A1P)	Y12S	Solenoid Valve (Oil Return M2C)
F410U~F412U	Fuse (A2P) (A5P)	R4T	Thermistor (Heat Exc. Liq. Upper) (A1P)	Y2S	Solenoid Valve (Liq. Pipe)
HAP	Pilotlamp (A1P) (A8P) (Service monitor-green)	R5T	Thermistor (Heat Exc. Liq. Lower) (A1P)	Y3S	Solenoid Valve (HP/LP Gas Pipe)
		R6T	Thermistor (Subcool Heat Exc. Gas) (A1P)	Y4S	Solenoid Valve (Heat Exc. Lower)
K1M	Magnetic Contactor (A3P) (A6P)	R7T	Thermistor (Subcool Heat Exc. Liq) (A1P)	Y5S	Solenoid Valve (Heat Exc. Upper)
K1R	Magnetic Relay (A3P) (A6P)	R8T	Thermistor (Heat Exc. Gas Upper) (A1P)	Z1C~Z7C	Noise Filter (Ferrite Core)
K3R	Magnetic Relay (A2P) (A5P)	R9T	Thermistor (Heat Exc. Gas Lower) (A1P)	Z1F	Noise Filter (A2P) (A5P) (witch surge absorber)
K3R	Magnetic Relay (Y11S) (A1P)	R10T	Thermistor (Suction) (A1P)		
K4R	Magnetic Relay (Y12S) (A1P)	R11T	Thermistor (Heat Exc. Deicer) (A8P)		
K6R	Magnetic Relay (A1P) (Optional Bottomplate Heater)	R12T	Thermistor (Suction compressor) (A8P)	Connector for Optional Accessories	
		R13T	Thermistor (Receiver Gas) (A8P)	X10A	Connector (Bottom Plate Heater)
K7R	Magnetic Relay (E1HC) (A1P)	R14T	Thermistor (Auto Charge) (A8P)		
K8R	Magnetic Relay (E2HC) (A1P)	S1NPH	Pressure Sensor (High)		
K9R	Magnetic Relay (Y3S) (A1P)	S1NPL	Pressure Sensor (Low)		
K11R	Magnetic Relay (Y2S) (A1P)	S1PH, S2PH	Pressure Switch (High)		
K12R	Magnetic Relay (Y4S) (A1P)	SEG1~SEG3	7-Segment Display (A1P)		

NOTES

1. This wiring diagram applies only to the outdoor unit.
2. ▬▮▮▬ :field wiring, ☐☐☐☐ : terminal block, ⊡⊡ : connector, –○– : terminal, ⏚ : Protective Earth (Screw).
3. For connection wiring to indoor-outdoor transmission F1-F2, outdoor-outdoor transmission F1-F2, outdoor-multi transmission Q1-Q2, refer to the installation manual.
4. When operating, don't shortcircuit the protection devices (S1PH,S2PH)
5. Colours BLK:BLACK; RED: RED; BLU; BLUE; WHT: WHITE; GRN: GREEN.
6. When using the optional accessory, refer to the installation manual of the optional accessory.

9 Wiring diagrams

9 - 1 Wiring Diagrams - Single Phase

REYQ18,20T7Y1B

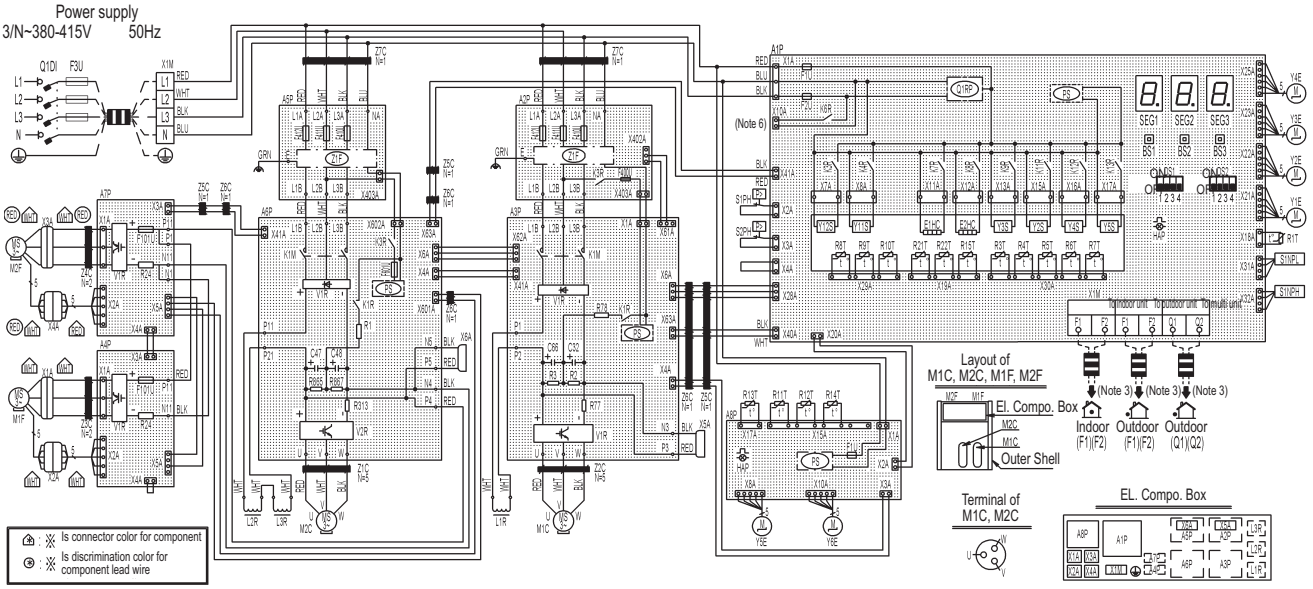

2D087543A

A1P	Printed Circuit Board (main)	PS	Switching Power Supply (A1P) (A3P) (A6P) (A8P)	X1M	Terminal Block (Power Supply)
A2P, A5P	Printed Circuit Board (noise filter)			X1M	Terminal Block (Control) (A1P)
A3P, A6P	Printed Circuit Board (inv)	Q1DI	Field Earth Leakage Breaker	Y1E	Electronic Expansion Valve (Heat Exc. Upper)
A4P, A7P	Printed Circuit Board (fan)	Q1RP	Phase Reversal Detect Circuit (A1P)	Y2E	Electronic Expansion Valve
A8P	Printed Circuit Board (sub)	R1	Resistor (Current Limiting) (A6P)		(Subcool Heat Exc.)
BS1~3	Push Button Switch (A1P)	R2, R3	Resistor (A3P)	Y3E	Electronic Expansion Valve (Heat Exc. Lower)
	(Mode, Set, Return)	R24	Resistor (Current Sensor) (A4P) (A7P)	Y4E	Electronic Expansion Valve (Receiver Gas)
C32, C66	Capacitor (A3P)	R77	Resistor (Current Sensor) (A3P)		
C47, C48	Capacitor (A6P)	R78	Resistor (Current Limiting) (A3P)	Y5E	Electronic Expansion Valve (Inverter Cooling)
DS1, DS2	DIP Switch (A1P)	R313	Resistor (Current Sensor) (A6P)	Y6E	Electronic Expansion Valve (Auto Charge)
E1HC, E2HC	Crankcase Heater	R865, R867	Resistor (A6P)	Y11S	Solenoid Valve (Oil Return M1C)
F1U, F2U	Fuse (T, 3,15A , 250V) (A1P) (A8P)	R1T	Thermistor (Air) (A1P)	Y12S	Solenoid Valve (Oil Return M2C)
F3U	Field Fuse	R21T, R22T	Thermistor (M1C, M2C Discharge) (A1P)	Y2S	Solenoid Valve (Liq. Pipe)
F101U	Fuse (A4P) (A7P)	R3T	Thermistor (Liq. Main) (A1P)	Y3S	Solenoid Valve (HP/LP Gas Pipe)
F400U	Fuse (A2P)	R4T	Thermistor (Heat Exc. Liq. Upper) (A1P)	Y4S	Solenoid Valve (Heat Exc. Lower)
F410U~F412U	Fuse (A2P) (A5P)	R5T	Thermistor (Heat Exc. Liq. Lower) (A1P)	Y5S	Solenoid Valve (Heat Exc. Upper)
F601U	Fuse (A6P)	R6T	Thermistor (Subcool Heat Exc. Gas) (A1P)	Z1C~Z7C	Noise Filter (Ferrite Core)
HAP	Pilotlamp (A1P) (A8P)	R7T	Thermistor (Subcool Heat Exc. Liq) (A1P)	Z1F	Noise Filter (A2P) (A5P)
	(Service monitor-green)	R8T	Thermistor (Heat Exc. Gas Upper) (A1P)		(witch surge absorb)
K1M	Magnetic Contactor (A3P) (A6P)	R9T	Thermistor (Heat Exc. Gas Lower) (A1P)		
K1R	Magnetic Relay (A3P) (A6P)	R10T	Thermistor (Suction) (A1P)	Connector for Optional Accessories	
K3R	Magnetic Relay (A2P) (A6P)	R11T	Thermistor (Heat Exc. Deicer) (A8P)	X10A	Connector (Bottomplate Heater)
K3R	Magnetic Relay (Y11S) (A1P)	R12T	Thermistor (Suction Compressor) (A8P)		
K4R	Magnetic Relay (Y12S) (A1P)	R13T	Thermistor (Receiver Gas) (A8P)		
K6R	Magnetic Relay (A1P)	R14T	Thermistor (Auto Charge) (A8P)		
	(Optional Bottomplate Heater)	R15T	Thermistor (Compressor Body) (A1P)		
K7R	Magnetic Relay (E1HC) (A1P)	S1NPH	Pressure Sensor (High)		
K8R	Magnetic Relay (E2HC) (A1P)	S1NPL	Pressure Sensor (Low)		
K9R	Magnetic Relay (Y3S) (A1P)	S1PH, S2PH	Pressure Switch (High)		
K11R	Magnetic Relay (Y2S) (A1P)	SEG1~SEG3	7-Segnment Display (A1P)		
K12R	Magnetic Relay (Y4S) (A1P)	V1R	Power Module (A3P) (A6P)		
K13R	Magnetic Relay (Y5S) (A1P)	V1R	Power Module (A4P (A7P)		
L1R~L3R	Reactor	V2R	Power Module (A6P)		
M1C, M2C	Motor (Compressor)	X1A~4A	Connector (M1F, M2F)		
M1F, M2F	Motor (Fan)	X5A, X6A	Connector (Residual Charge Check)		

NOTES

1. This wiring diagram applies only to the outdoor unit.
2. ⊏▮▮⊐ :field wiring, ☐☐☐☐ : terminal block, ⊡⊡ : connector, –○– : terminal, ⏚ : Protective Earth (Screw).
3. For connection wiring to indoor-outdoor transmission F1-F2, outdoor-outdoor transmission F1-F2, outdoor-multi transmission Q1-Q2, refer to the installation manual.
4. When operating, don't shortcircuit the protection devices (S1PH,S2PH)
5. Colours BLK:BLACK; RED: RED; BLU; BLUE; WHT: WHITE; GRN: GREEN.
6. When using the optional accessory, refer to the installation manual of the optional accessory.

10 External connection diagrams

10 - 1 External Connection Diagrams

REYQ-T

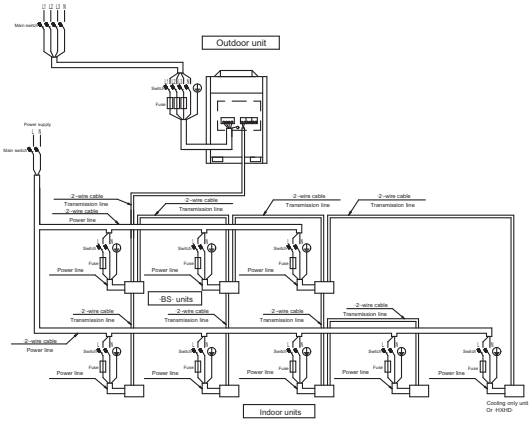

1. All wiring, components and materials to be procured on-site must comply with the applicable legislation.
2. Use copper conductors only
3. For more details, refer to the wiring diagram of the unit.
4. Install a circuit breaker for safety.
5. All field wiring and components must be provided by an authorised electrician.
6. Unit has to be grounded in compliance with the applicable legislation.
7. The wiring shown is a general points-of-connection guide and is not intended to include all details for a specific installation.
8. Make sure to install the switch and the fuse to the power line of each equipement.
9. Install a main to switch to (if necessary) immediately interrupt all the system's power sources.
10. If there exists the possibility of reversed phase, loose phase or momentary blackout, or if the power goes on and off while the product is operating, attach a reversed phase protection circuit locally. Running the product in reversed phase may break the compressor and other parts.
11. Install an earth leakage circuit breaker.

3D088095

REYQ-T

Power source is supplied to each outdoor unit individually.

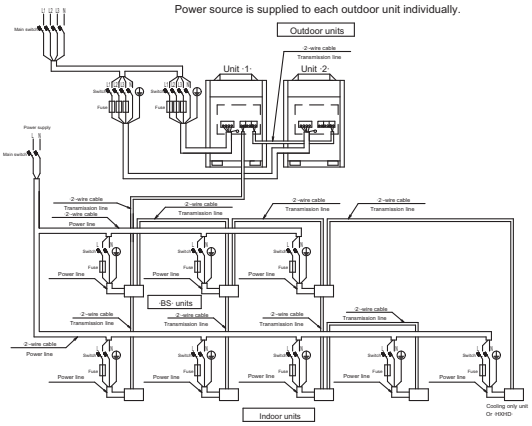

Power source is connected in series between the units.

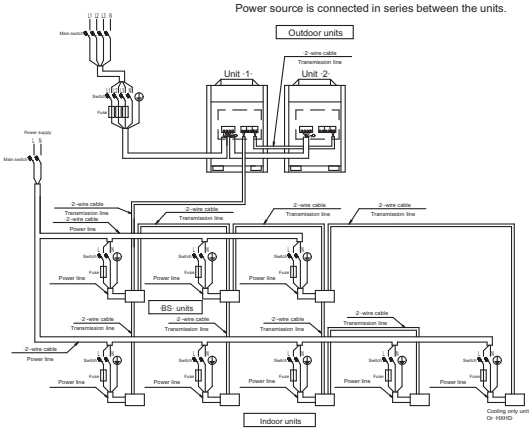

1. All wiring, components and materials to be procured on-site must comply with the applicable legislation.
2. Use copper conductors only
3. For more details, refer to the wiring diagram of the unit.
4. Install a circuit breaker for safety.
5. All field wiring and components must be provided by an authorised electrician.
6. Unit has to be grounded in compliance with the applicable legislation.
7. The wiring shown is a general points-of-connection guide and is not intended to include all details for a specific installation.
8. Make sure to install the switch and the fuse to the power line of each equipement.
9. Install a main to switch to (if necessary) immediately interrupt all the system's power sources.
10. If there exists the possibility of reversed phase, loose phase or momentary blackout, or if the power goes on and off while the product is operating, attach a reversed phase protection circuit locally. Running the product in reversed phase may break the compressor and other parts.
11. Install an earth leakage circuit breaker.
12. The capacity of UNIT1 must be larger than that of UNIT2 when the power source is connected in series between the units.

3D088094

10 External connection diagrams

10 - 1 External Connection Diagrams

REYQ-T

Power source is supplied to each outdoor unit individually.

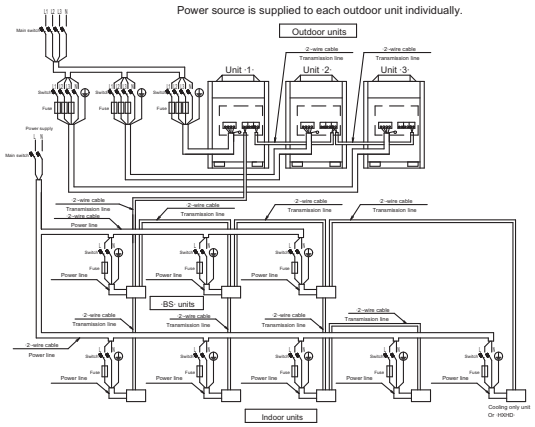

Power source is connected in series between the units.

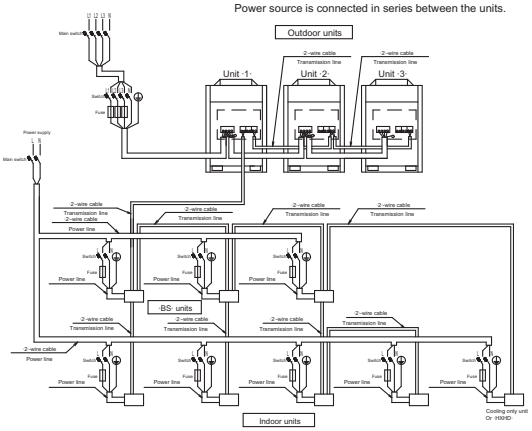

1. All wiring, components and materials to be procured on-site must comply with the applicable legislation.
2. Use copper conductors only
3. For more details, refer to the wiring diagram of the unit.
4. Install a circuit breaker for safety.
5. All field wiring and components must be provided by an authorised electrician.
6. Unit has to be grounded in compliance with the applicable legislation.
7. The wiring shown is a general points-of-connection guide and is not intended to include all details for a specific installation.
8. Make sure to install the switch and the fuse to the power line of each equipement.
9. Install a main to switch to (if necessary) immediately interrupt all the system's power sources.
10. If there exists the possibility of reversed phase, loose phase or momentary blackout, or if the power goes on and off while the product is operating, attach a reversed phase protection circuit locally. Running the product in reversed phase may break the compressor and other parts.
11. Install an earth leakage circuit breaker.
12. The capacity of UNIT1 must be larger than that of UNIT2 when the power source is connected in series between the units.

3D088016

11 Sound data

11 - 1 Sound Power Spectrum

11

REMQ5T
REYQ8T

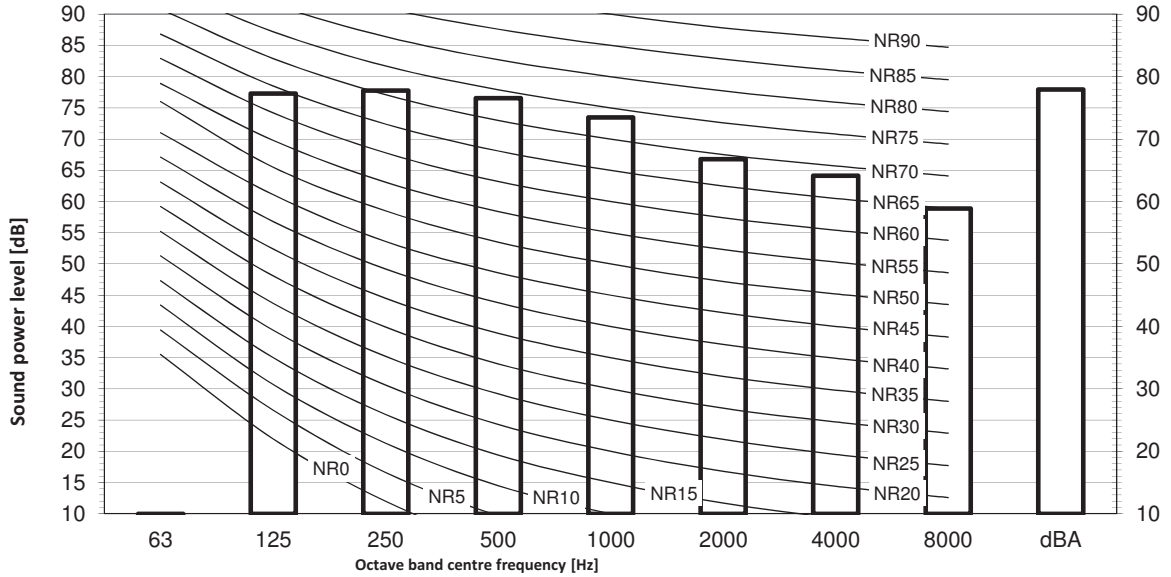

Notes :
1. dBA = A-weighted sound power level (A scale according to IEC).
2. Reference acoustic intensity 0dB = ·10E-6µW/m²·
3. Measured according to ISO 3744

3D079537B

REYQ10T

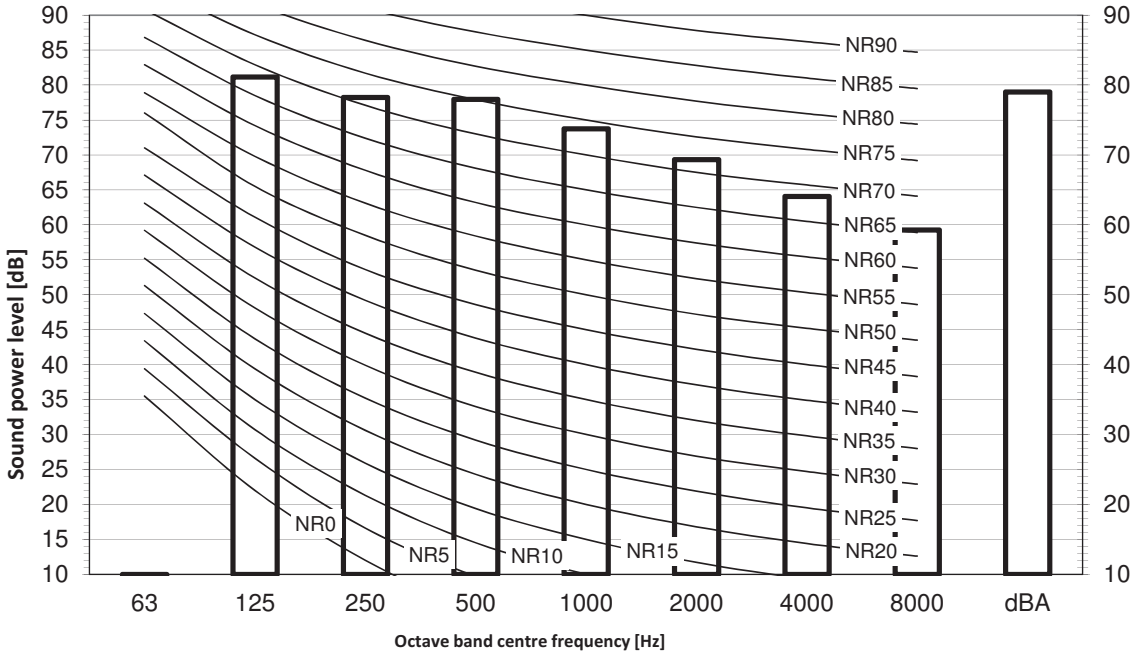

Notes :
1. dBA = A-weighted sound power level (A scale according to IEC).
2. Reference acoustic intensity 0dB = ·10E-6µW/m²·
3. Measured according to ISO 3744

3D079908B

11 Sound data

11 - 1 Sound Power Spectrum

REYQ12T

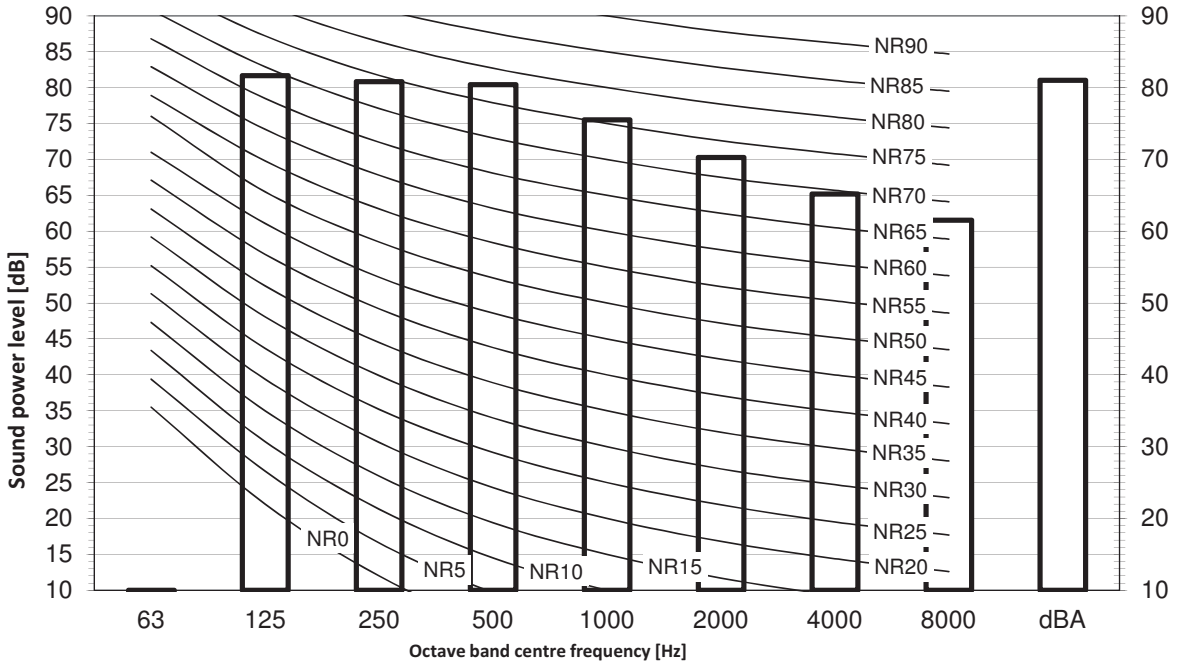

Notes :
1. dBA = A-weighted sound power level (A scale according to IEC).
2. Reference acoustic intensity 0dB = ·10E-6µW/m²·
3. Measured according to ISO 3744

3D079909B

REYQ14T

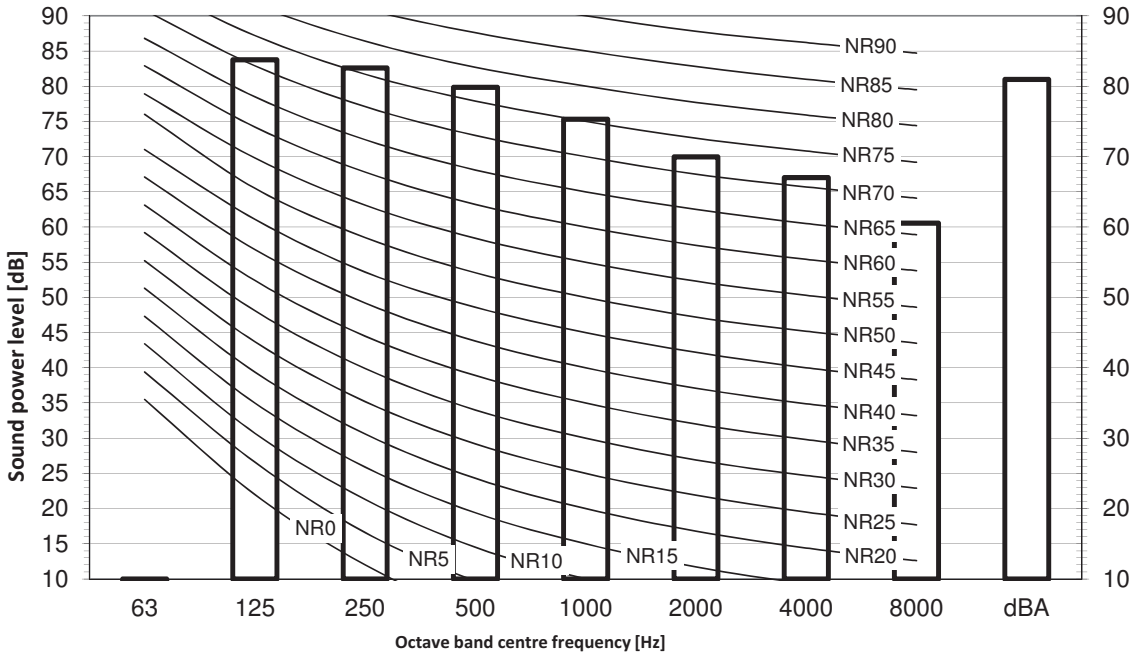

Notes :
1. dBA = A-weighted sound power level (A scale according to IEC).
2. Reference acoustic intensity 0dB = ·10E-6µW/m²·
3. Measured according to ISO 3744

3D079910B

11 Sound data

11 - 1 Sound Power Spectrum

REYQ16T

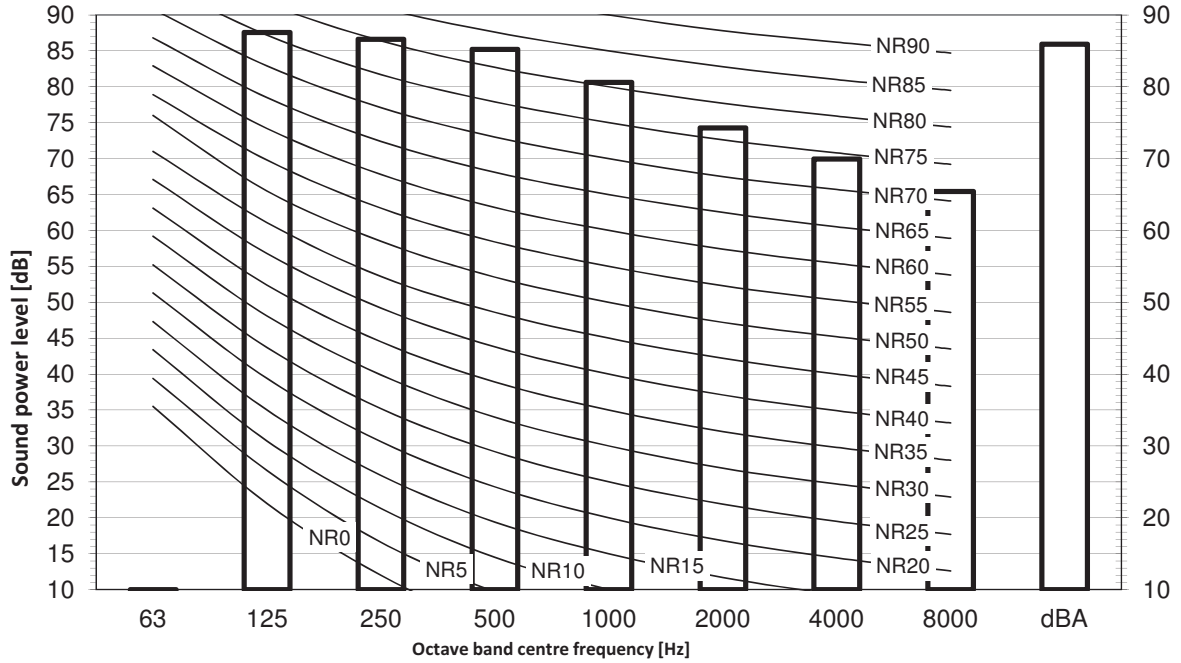

Notes :
1. dBA = A-weighted sound power level (A scale according to IEC).
2. Reference acoustic intensity 0dB = ·10E-6μW/m²·
3. Measured according to ISO 3744

3D079911B

REYQ18T

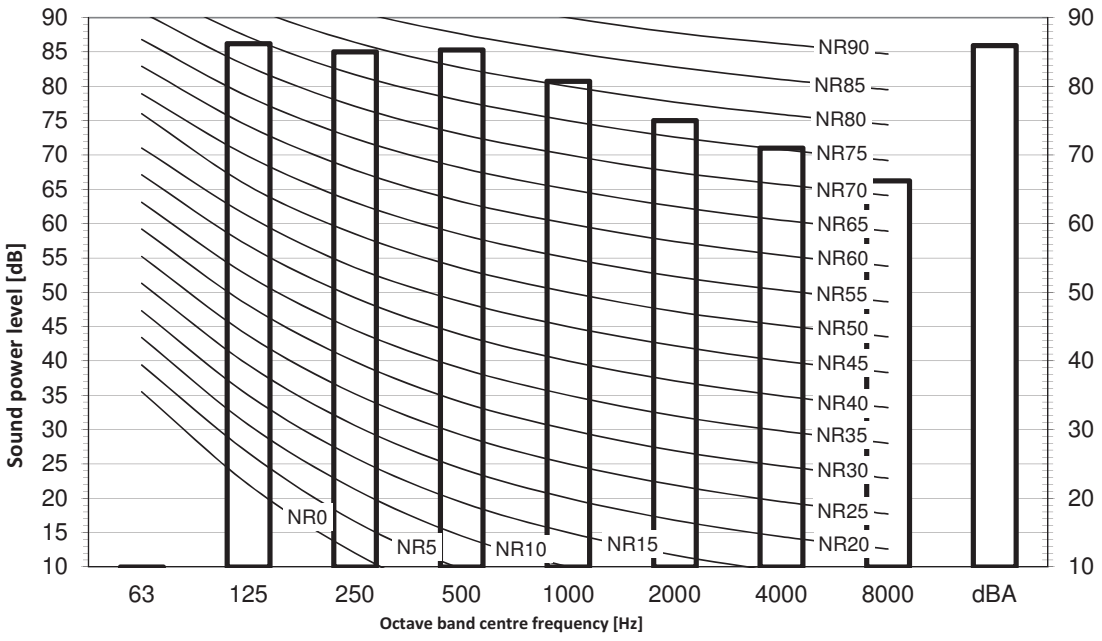

Notes :
1. dBA = A-weighted sound power level (A scale according to IEC).
2. Reference acoustic intensity 0dB = ·10E-6μW/m²·
3. Measured according to ISO 3744

3D079912B

11 Sound data

11 - 1 Sound Power Spectrum

REYQ20T

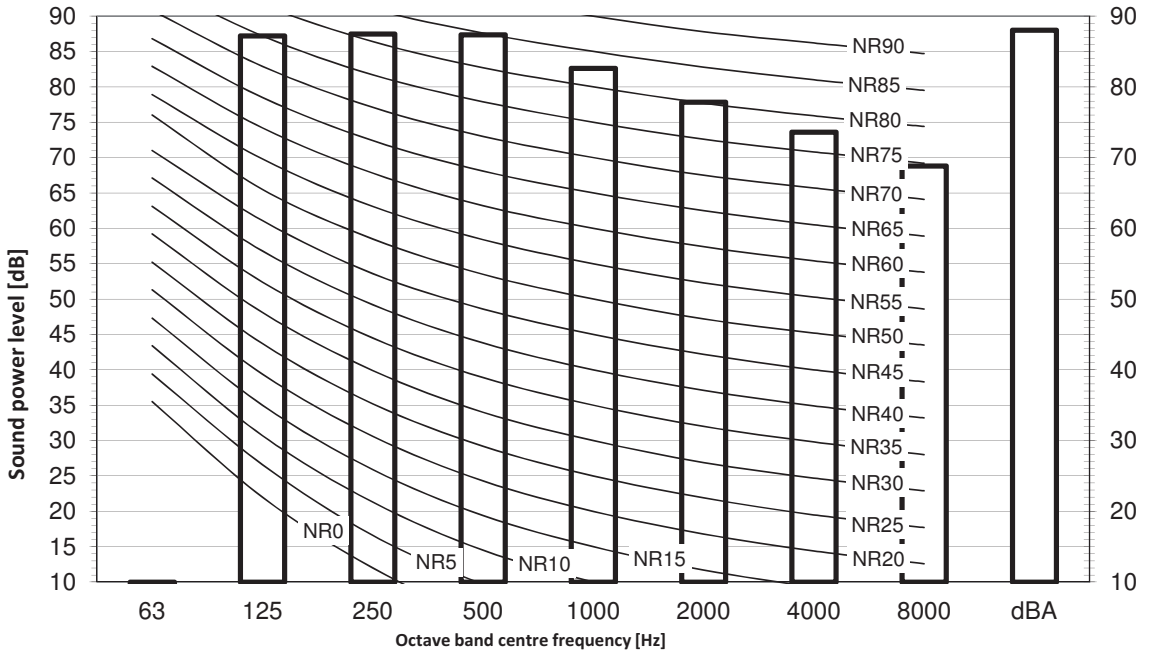

Notes :

1. dBA = A-weighted sound power level (A scale according to IEC).
2. Reference acoustic intensity 0dB = ·10E-6µW/m²·
3. Measured according to ISO 3744

3D079913B

11 Sound data

11 - 2 Sound Pressure Spectrum

REMQ5T
REYQ8T

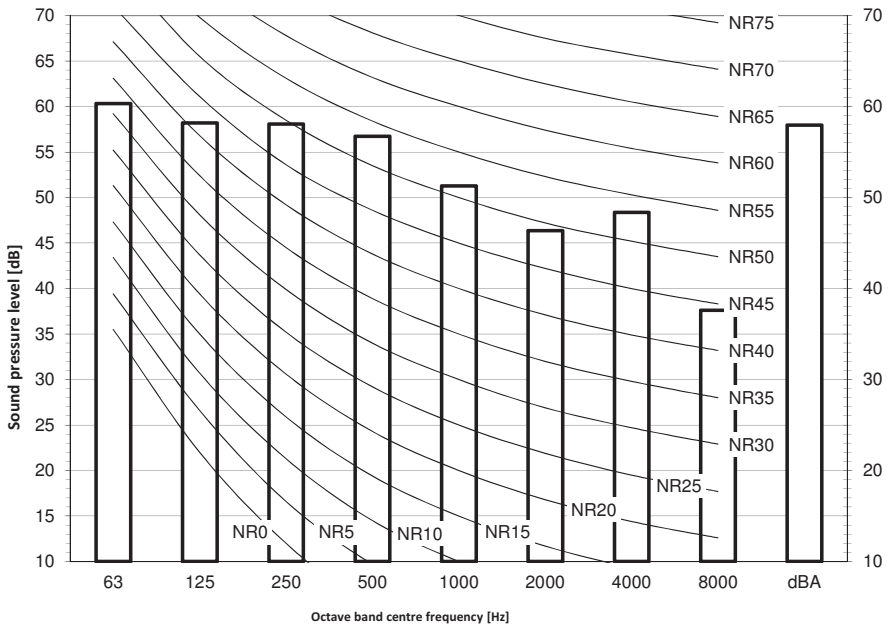

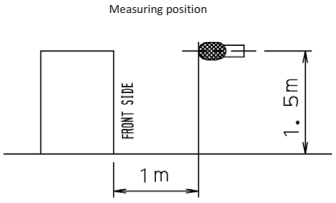

Notes :
1. Data is valid at free field condition.
2. Data is valid at nominal operation condition.
3. dBA = A-weighted sound pressure level (A scale according to IEC).
4. Reference acoustic pressure 0 dB = 20 µPa

3D079536B

REYQ10T

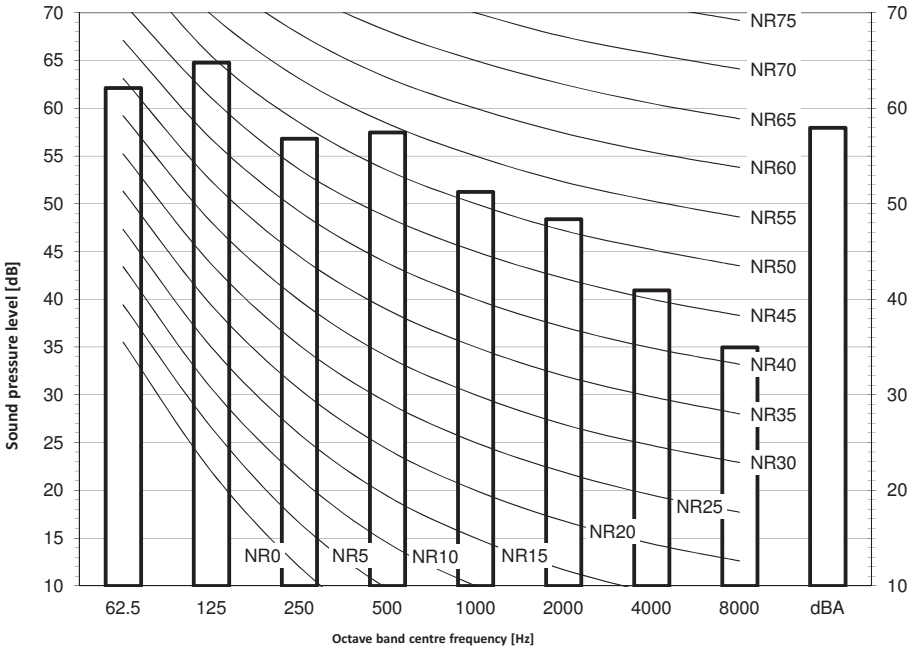

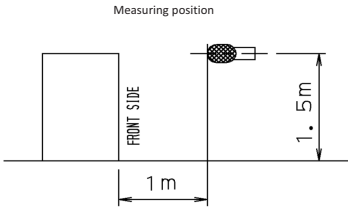

Notes :
1. Data is valid at free field condition.
2. Data is valid at nominal operation condition.
3. dBA = A-weighted sound pressure level (A scale according to IEC).
4. Reference acoustic pressure 0 dB = 20 µPa

3D079902B

11 Sound data

11 - 2 Sound Pressure Spectrum

REYQ12T

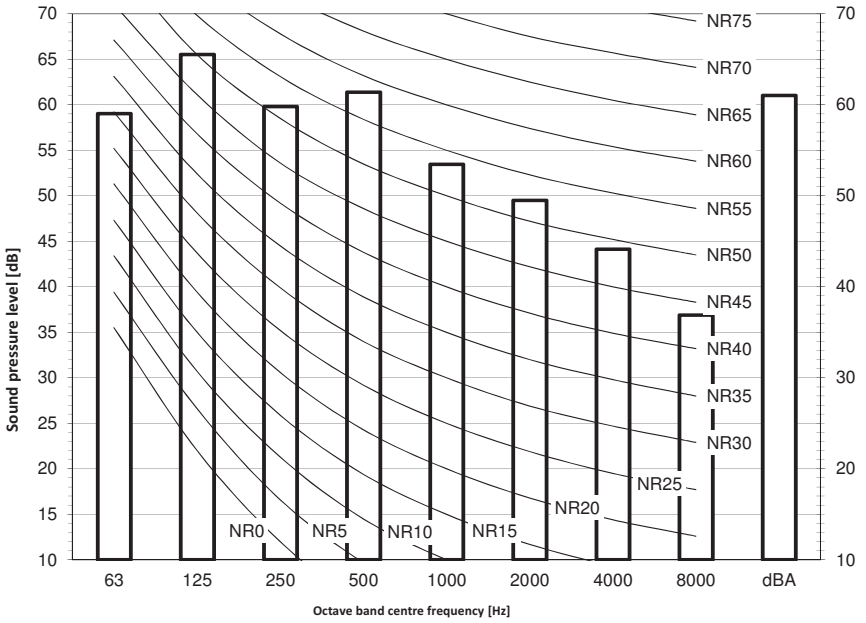

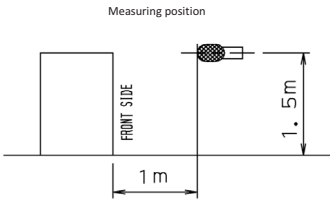

Notes :
1. Data is valid at free field condition.
2. Data is valid at nominal operation condition.
3. dBA = A-weighted sound pressure level (A scale according to IEC).
4. Reference acoustic pressure 0 dB = 20 µPa

3D079903B

REYQ14T

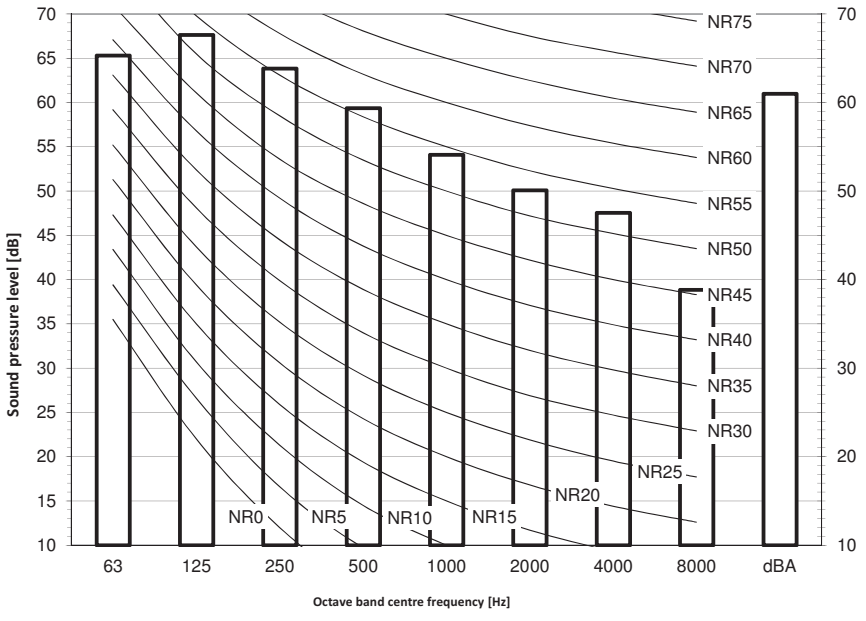

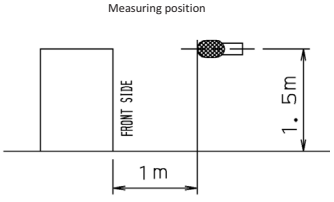

Notes :
1. Data is valid at free field condition.
2. Data is valid at nominal operation condition.
3. dBA = A-weighted sound pressure level (A scale according to IEC).
4. Reference acoustic pressure 0 dB = 20 µPa

3D079904B

11 Sound data

11 - 2 Sound Pressure Spectrum

REYQ16T

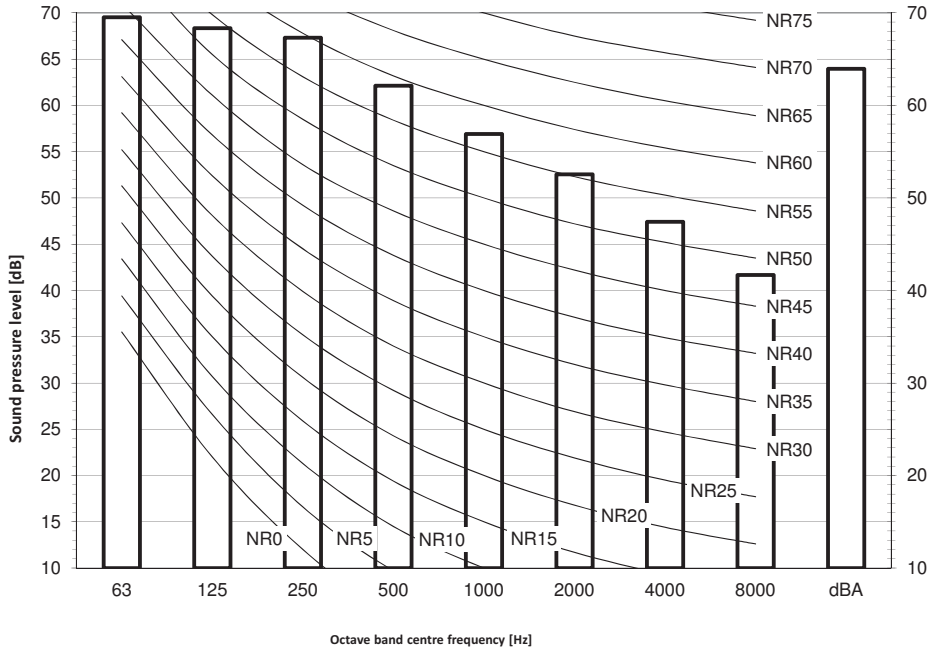

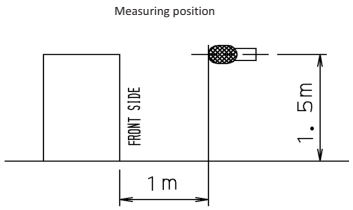

Notes :
1. Data is valid at free field condition.
2. Data is valid at nominal operation condition.
3. dBA = A-weighted sound pressure level (A scale according to IEC).
4. Reference acoustic pressure 0 dB = 20 µPa

3D079905B

REYQ18T

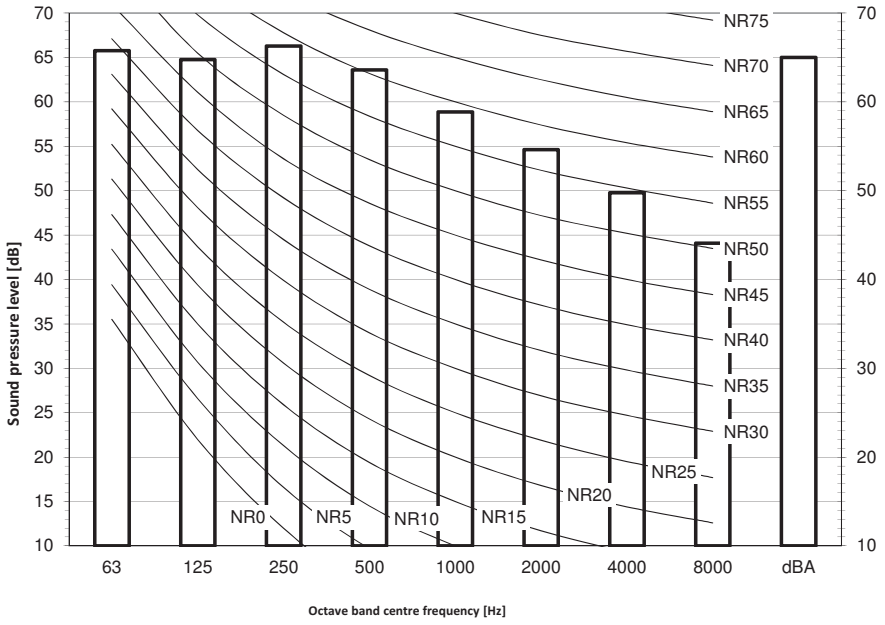

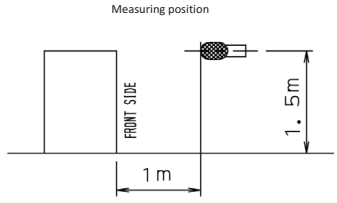

Notes :
1. Data is valid at free field condition.
2. Data is valid at nominal operation condition.
3. dBA = A-weighted sound pressure level (A scale according to IEC).
4. Reference acoustic pressure 0 dB = 20 µPa

3D079906B

11 Sound data

11 - 2 Sound Pressure Spectrum

REYQ20T

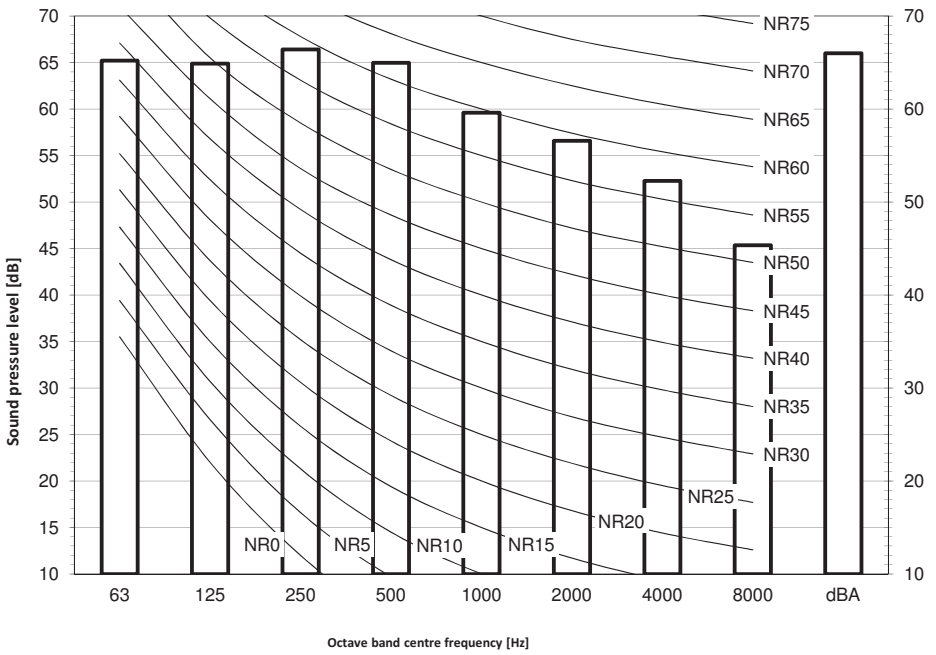

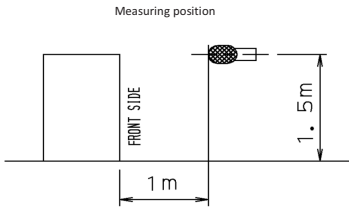

Notes :
1. Data is valid at free field condition.
2. Data is valid at nominal operation condition.
3. dBA = A-weighted sound pressure level (A scale according to IEC).
4. Reference acoustic pressure 0 dB = 20 µPa

3D079907B

12 Installation

12 - 1 Installation Method

REYQ-T

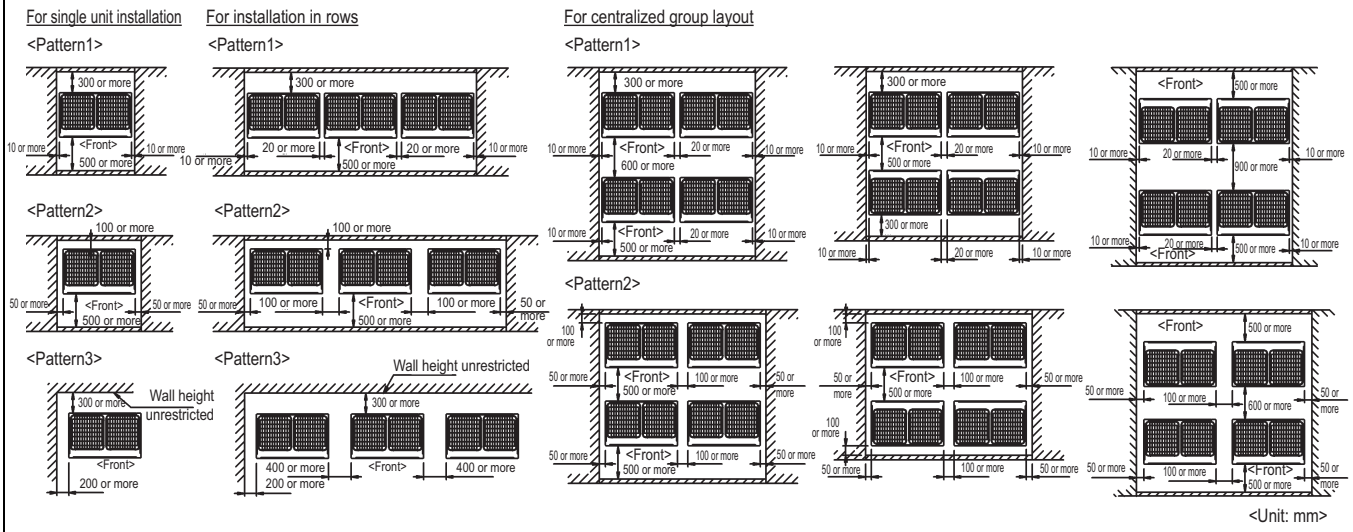

<Unit: mm>

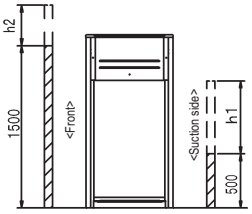

NOTES

1. Heights of walls in case of Patterns 1 and 2:
   Front: 1500mm
   Suction side: 500mm
   Side: Height unrestricted
   Installation space as shown on this drawing is based on the cooling operation at 35 degrees outdoor air temperature.
   When the design outdoor air temperature exceeds 35 degrees or the load exceeds maximum ability because of much generation load of heat in all outdoor units, take the suction side space more broadly than the space as shown in this drawing.
2. If the above wall heights are exceeded then h2/2 and h1/2 should be added to the front and suction side service space respectively as shown in the figure on the right.
3. When installing the units most appropriate pattern should be selected from those shown above in order to obtain the best fit in the space available always bearing in mind the need to leave enough space for a person to pass between units and wall and for the air to circulate freely. (If more units are to be installed than are catered for in the above patterns your layout should take account of the possibility of short circuits.)
4. The units should be installed to leave sufficient space at the front for the on site refrigerant piping work to be carried out comfortably.

3D079542

12 Installation

12 - 2 Fixation and Foundation of Units

REMQ5T
REYQ-T

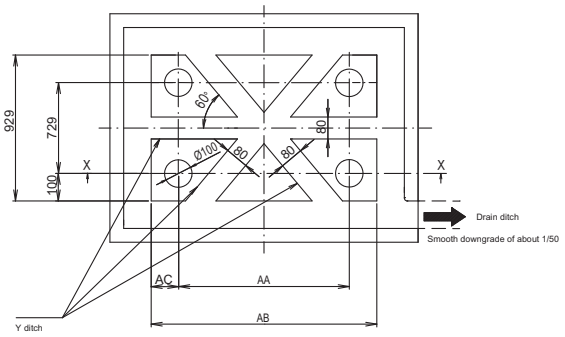

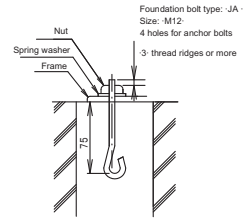

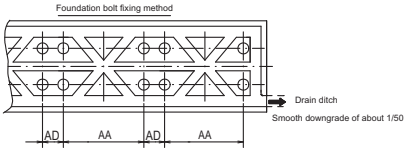

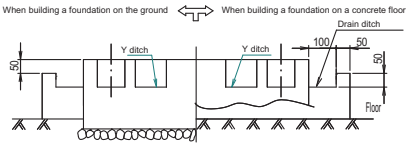

Cross section · X - X·

For multi-unit installation

Model	AA	AB	AC	AD
RYYQ8-12T RYMQ8-12T RXYQ8-12T RXYQ8-12T REMQ5T / REYQ8-12T	766	992	113	185
RYYQ14-20T RYMQ14-20T RXYQ14-20T RXYQQ14-20T REYQ14-20T	1076	1302		
RXYCQ8	497	697	100	160
RXYCQ10-14	792	992		
RXYCQ16-20	1102	1302		

Notes

1. Provide a drain ditch around the foundation to drain water from the installation area.
2. The surface has to be finished with mortar. The corner edges have to be chamfered.
3. Build the foundation on a concrete floor or, if not possible, make sure the foundation surface has a rough finish.
4. Use a cement/sand/gravel ratio of 1/2/4 for the concrete, and a diameter of 10 mm for the reinforcement bars (approximately, 300mm intervals).
5. When installing the equipment on a roof, make sure to check the strength of the floor and take adequate water proofing measures.

3D079547D

12 Installation

12 - 3 Refrigerant Pipe Selection

REYQ-T

To select the piping size

Determine the proper size referring to following tables and reference figure (only for indication).

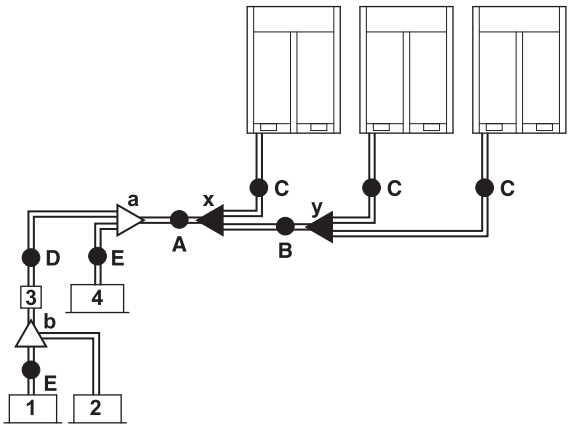

1,2 VRV DX indoor unit
3 BS unit
4 Cooling-only VRV indoor unit
A~E Piping
a,b Indoor branch kit
x,y Outdoor multi connection kit
A, B, C: Piping between outdoor

A, B, C: Piping between outdoor unit and (first) refrigerant branch kit

Choose from the following table in accordance with the outdoor unit total capacity type, connected downstream.

Outdoor unit capacity type (HP)	Piping outer diameter size (mm)		
	Liquid pipe	Suction gas pipe	High pressure/low pressure gas pipe
5~8	9.5	19.1	15.9
10	9.5	22.2	19.1
12	12.7	28.6	19.1
14~16	12.7	28.6	22.2
18	15.9	28.6	22.2
20~22	15.9	28.6	28.6
24	15.9	34.9	28.6
26~34	19.1	34.9	28.6
36	19.1	41.3	28.6
38~54	19.1	41.3	34.9

D: Piping between refrigerant branch kits or refrigerant branch kit and BS unit

Choose from the following table in accordance with the indoor unit total capacity type, connected downstream. Do not let the connection piping exceed the refrigerant piping size chosen by the general system model name.

Indoor unit capacity index	Piping outer diameter size (mm)		
	Liquid pipe	Suction gas pipe	High pressure/low pressure gas pipe
<150	9.5	15.9	12.7
150≤x<200		19.1	15.9
200≤x<290		22.2	19.1
290≤x<420	12.7	28.6	
420≤x<640	15.9		28.6
640≤x<920	19.1	34.9	
≥920		41.3	

Example:

- Downstream capacity for E=capacity index of unit 1
- Downstream capacity for D=capacity index of unit 1+capacity index of unit 2

E: Piping between refrigerant branch kit or BS unit and indoor unit

Pipe size for direct connection to indoor unit must be the same as the connection size of the indoor unit (in case indoor unit is VRV DX indoor or Hydrobox).

Indoor unit capacity index	Piping outer diameter size (mm)	
	Gas pipe	Liquid pipe
15~50	12.7	6.4
63~125	15.9	9.5
200	19.1	
250	22.2	

- If a size-up of the piping is required, refer to the table below.

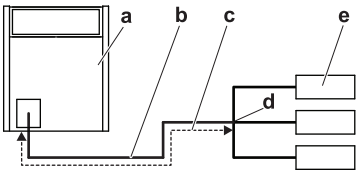

a Outdoor unit
b Main pipes
c Increase
d First refrigerant branch kit
e Indoor unit

Size up	
HP class	Liquid piping outer diameter size (mm)
5~8	9.5 → 12.7
10	
12+14	12.7 → 15.9
16	
18~22	15.9 → 19.1
24	
26~34	19.1 → 22.2
36~54	

- The pipe thickness of the refrigerant piping shall comply with the applicable legislation. The minimal pipe thickness for R410A piping must be in accordance with the table below.

4P353997A_1_1

12 Installation

12 - 3 Refrigerant Pipe Selection

REYQ-T

Pipe Ø (mm)	Minimal thickness t (mm)
6.4/9.5/12.7	0.80
15.9	0.99
19.1/22.2	0.80
28.6	0.99
34.9	1.21
41.3	1.43

- In case the required pipe sizes (inch sizes) are not available, it is also allowed to use other diameters (mm sizes), taken the following into account:
  - Select the pipe size nearest to the required size.
  - Use the suitable adapters for the changeover from inch to mm pipes (field supply).
  - The additional refrigerant calculation has to be adjusted as mentioned in "6.7.3 To determine the additional refrigerant amount" on page 27.

To select refrigerant branch kits

Refrigerant refnets

For piping example, refer to "5.3.2 To select the piping size" on page 13.

▪ When using refnet joints at the first branch counted from the outdoor unit side, choose from the following table in accordance with the capacity of the outdoor unit (example: refnet joint a).

Outdoor unit capacity type (HP)	3 pipes
8~10	KHRQ23M29T9
12~22	KHRQ23M64T
24~54	KHRQ23M75T

- For refnets joints other than the first branch (example refnet joint b), select the proper branch kit model based on the total capacity index of all indoor units connected after the refrigerant branch

Indoor unit capacity index	3 pipes
<200	KHRQ23M20T
200≤x<290	KHRQ23M29T9
290≤x<640	KHRQ23M64T
≥640	KHRQ23M75T

- Concerning refnet headers, choose from the following table in accordance with the total capacity of all the indoor units connected below the refnet header.

Indoor unit capacity index	3 pipes
<200	KHRQ23M29H
200≤x<290	
290≤x<640	KHRQ23M64H(a)
≥640	KHRQ23M75H

(a) If the pipe size above the refnet header is Ø34.9 or more, KHRQ23M75H is required.

INFORMATION
Maximum 8 branches can be connected to a header.

- How to choose an outdoor multi connection piping kit. Choose from the following table in accordance with the number of outdoor units.

Number of outdoor units	Branch kit name
2	BHFQ23P907
3	BHFQ23P1357

About the piping length

Make sure the piping installation does not exceed the maximum allowable pipe length, the allowable level difference, and the allowable length after branching. To illustrate the piping length requirements, six cases are discussed in the chapters below. They describe both standard and nonstandard outdoor unit combinations with VRV DX indoor units, Hydrobox units and/or air handling units (AHU).

Definitions

Term	Definition
Actual piping length	Pipe length between outdoor and indoor units
Equivalent piping length	Pipe length between outdoor and indoor units, including the equivalent length of the piping accessories
Total piping length	Total piping length, from the outdoor to all indoor units

Equivalent length of the piping accessories

Accessory	Equivalent length (m)
Refnet joint	0.5
Refnet header	1
Single BS1Q100~160	4
Single BS1Q25	6
Multi BS4~16Q14	4

Allowable height difference

Term	Definition	Height difference (m)
H1	Hight difference between outdoor and indoor units	50/40 (*)
H2	Height difference between indoor units	15
H3	Height difference between outdoor units	5
H4	Height difference between EKEXV-kits and AHU units.	5

(*) The allowable height difference is 50 m in case the outdoor unit is positioned higher than the indoor unit, and 40 m in case the outdoor unit is positioned lower than the indoor unit. If only VRV DX indoor units are used, the allowable height difference between outdoor and indoor units may be extended to 90 m, without the need of an additional option kit. In this case, make sure all conditions below are met:

If	Then
The outdoor unit is positioned higher than the indoor units	• Minimum connection ratio: 80% • Size up the liquid piping (refer to "5.3.2 To select the piping size" on page 13 for more information) • Activate the outdoor unit setting. Refer to the service manual for more information.

The outdoor unit is positioned lower than the indoor units	• Minimum connection ratio varies according to the height difference between outdoor and indoor units:
	  • 40~60 m : 80%
	  • 60~65 m : 90%
	  • 65~80 m : 100%
	  • 80 ~90 m : 110%
	• Size up the liquid piping (refer to "5.3.2 To select the piping size" on page 13 for more information)
	• Activate the outdoor unit setting. Refer to the service manual for more information
	• No technical cooling

4P353997-1A_2

12 Installation

12 - 3 Refrigerant Pipe Selection

REYQ-T

Single outdoor units and standard multi-outdoor-unit combinations >20 HP

Connection with only VRV DX indoor units

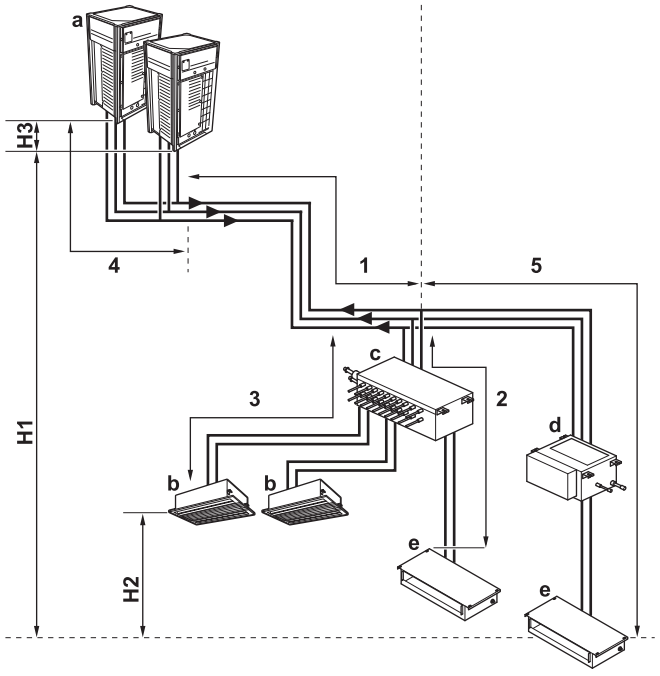

a Outdoor unit
b VRV DX indoor unit
c Multi BS unit
d BS unit
e VRV DX indoor unit

Pipe	Maximum length (actual/equivalent)
Longest pipe from the outdoor unit or the last multi-outdoor piping branch (1+2, 1+3, 1+5)	165 m/190 m[(a)]
Longest pipe after the first branch (2, 3, 5)	40 m/—(*)
In case of a multi-outdoor setup: longest pipe from the outdoor unit to the last multi-outdoor piping branch (4)	10 m/13 m
Total pipe length	1000 m/—

(a) If the equivalent piping length is more than 90 m, size up the main liquid piping according to "5.3.2 To select the piping size" on page 13.

(*)

An extension to up to 90 m is possible if all of the following conditions are met:

1. In case of BS1Q units, the piping length between all indoor units and the nearest branch kit is ≤40 m.
2. In case of multi BS units, the piping length between all indoor units and the multi BS unit is ≤40 m.
3. It is required to size up the liquid piping between the first branch kit and the last. Beware that in contrast to multi BS units, BS1Q units are NOT considered branch kits. If the increased pipe size is larger than the pipe size of the main pipe, also increase the size of the main pipe.
4. After sizing up the liquid piping (previous condition), double its length in the calculation of the total piping length. Make sure the total piping length is within limitations.
5. The piping length difference between the nearest indoor unit to the outdoor unit and the farthest indoor unit to the outdoor unit is ≤40 m.

Connection with VRV DX indoor units and Hydrobox units

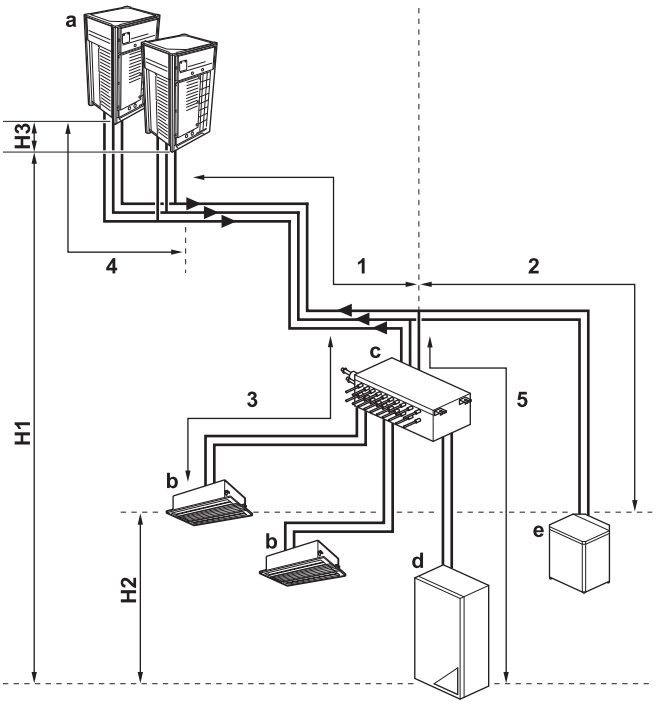

a Outdoor unit
b VRV DX indoor unit
c Multi BS unit
d LT Hydrobox unit
e HT Hydrobox unit

Pipe	Maximum length (actual/equivalent)
Longest pipe from the outdoor unit or the last multioutdoor piping branch (1+2, 1+3, 1+5)	135 m/160 m[(a)]
Longest pipe after the first branch (2, 3, 5)	40 m
In case of a multioutdoor setup: longest pipe from the outdoor unit to the last multioutdoor piping branch (4)	10 m/13 m
Total pipe length	300 m/600 m[(b)]

(a) If the equivalent piping length is more than 90 m, size up the main liquid piping according to "5.3.2 To select the piping size" on page 13.

(b) In this case, both are actual piping lengths: outdoor units ≤ 20 HP / outdoor units > 20HP

4P353997-1A_3

12 Installation

12 - 3 Refrigerant Pipe Selection

REYQ-T

Connection with VRV DX indoor units and air handling units

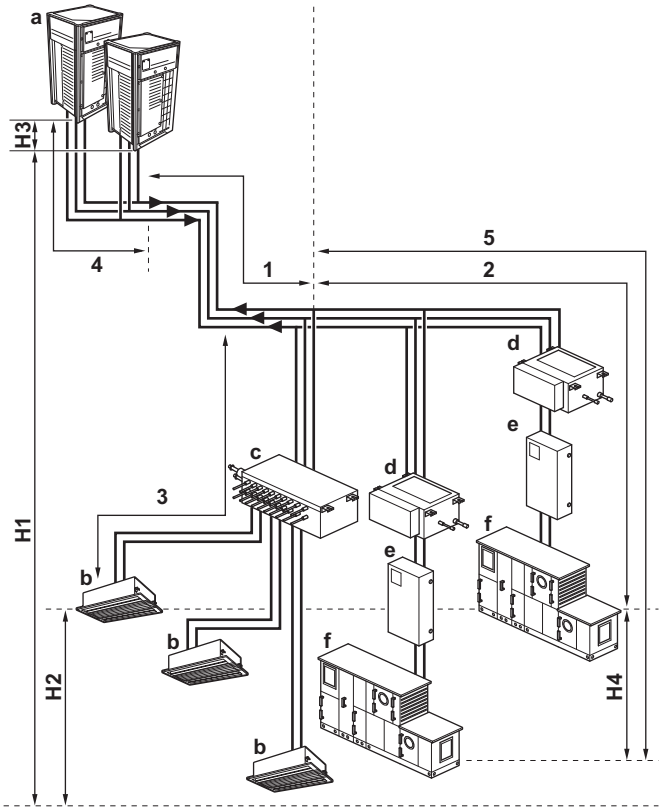

a Outdoor unit
b VRV DX indoor unit
c Multi BS unit
d BS unit
e EKEXV kit
f AHU

Pipe	Maximum length (actual/equivalent)
Longest pipe from the outdoor unit or the last multi-outdoor piping branch (1+2, 1+3, 1+5)	165 m/190 m[(a)]
Longest pipe after the first branch (2, 3, 5)	40 m/—
In case of a multioutdoor setup: longest pipe from the outdoor unit to the last multi-outdoor piping branch (4)	10 m/13 m
Total pipe length	1000 m/—

(a) If the equivalent piping length is more than 90 m, size up the main liquid piping according to "5.3.2 To select the piping size" on page 13.

Standard multi-outdoor-unit combinations ≤20 HP and free multi-outdoor-unit combinations

Connection with only VRV DX indoor units

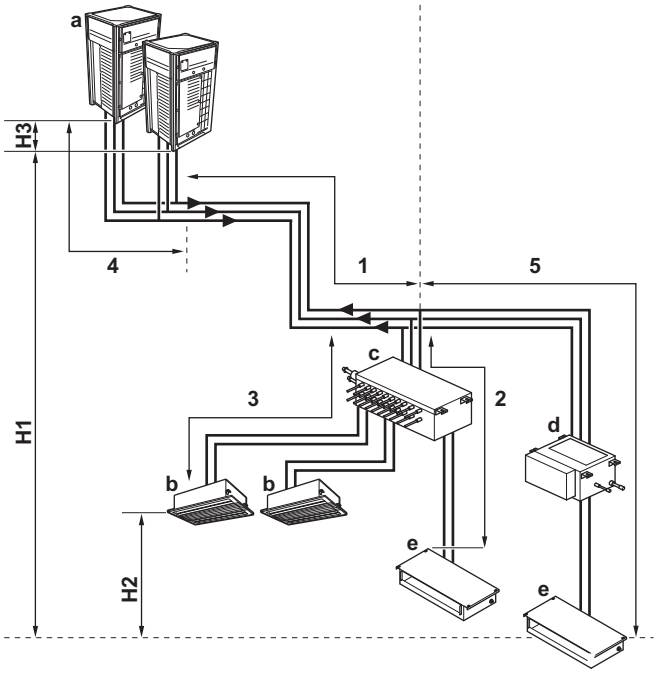

a Outdoor unit
b VRV DX indoor unit
c Multi BS unit
d BS unit
e VRV DX indoor unit

Pipe	Maximum length (actual/equivalent)
Longest pipe from the outdoor unit or the last multioutdoor piping branch (1+2, 1+3, 1+5)	135 m/160 m[(a)]
Longest pipe after the first branch (2, 3, 5)	40 m/—(*)
In case of a multi-outdoor setup: longest pipe from the outdoor unit to the last multi-outdoor piping branch (4)	10 m/13 m
Total pipe length	500 m/—

(a) If the equivalent piping length is more than 90 m, size up the main liquid piping according to "5.3.2 To select the piping size" on page 13.

(*)

An extension to up to 90 m is possible if all of the following conditions are met:

1. In case of BS1Q units, the piping length between all indoor units and the nearest branch kit is ≤40 m.
2. In case of multi BS units, the piping length between all indoor units and the multi BS unit is ≤40 m.
3. It is required to size up the liquid piping between the first branch kit and the last. Beware that in contrast to multi BS units, BS1Q units are NOT considered branch kits. If the increased pipe size is larger than the pipe size of the main pipe, also increase the size of the main pipe.
4. After sizing up the liquid piping (previous condition), double its length in the calculation of the total piping length. Make sure the total piping length is within limitations.
5. The piping length difference between the nearest indoor unit to the outdoor unit and the farthest indoor unit to the outdoor unit is ≤40 m.

12 Installation

12 - 3 Refrigerant Pipe Selection

REYQ-T

Connection with VRV DX indoor units and Hydrobox units

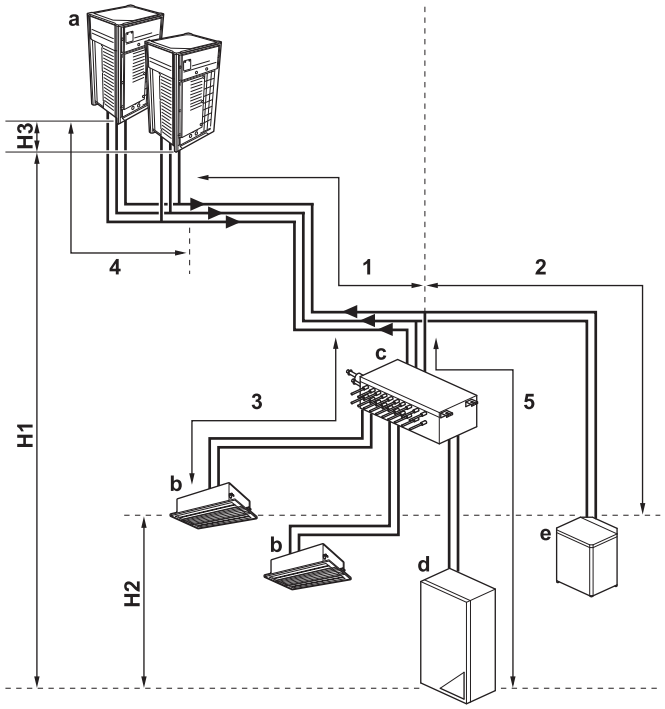

a Outdoor unit
b VRV DX indoor unit
c Multi BS unit
d LT Hydrobox unit
e HT Hydrobox unit

Pipe	Maximum length (actual/equivalent)
Longest pipe from the outdoor unit or the last multioutdoor piping branch (1+2, 1+3, 1+5)	135 m/160 m[(a)]
Longest pipe after the first branch (2, 3, 5)	40 m/—
In case of a multioutdoor setup: longest pipe from the outdoor unit to the last multioutdoor piping branch (4)	10 m/13 m
Total pipe length	300 m/500 m[(b)]

(a) If the equivalent piping length is more than 90 m, size up the main liquid piping according to "5.3.2 To select the piping size" on page 13.

(b) In this case, both are actual piping lengths: outdoor units ≤20 HP / outdoor units >20 HP.

Connection with VRV DX indoor units and air handling units

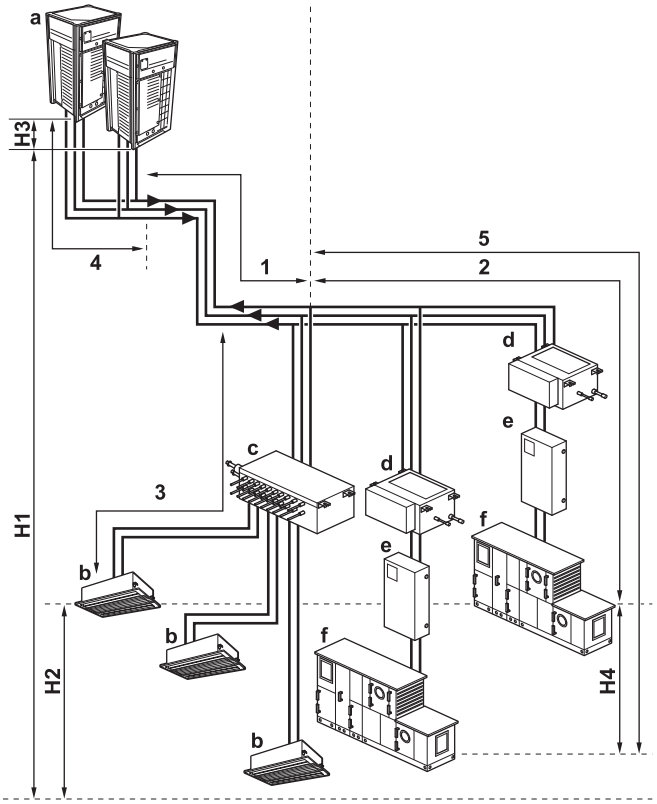

a Outdoor unit
b VRV DX indoor unit
c Multi BS unit
d BS unit
e EKEXV kit
f AHU

Pipe	Maximum length (actual/equivalent)
Longest pipe from the outdoor unit or the last multioutdoor piping branch (1+2, 1+3, 1+5)	135 m/160 m[(a)]
Longest pipe after the first branch (2, 3, 5)	40 m/—
In case of a multioutdoor setup: longest pipe from the outdoor unit to the last multioutdoor piping branch (4)	10 m/13 m
Total pipe length	500 m/—

(a) If the equivalent piping length is more than 90 m, size up the main liquid piping according to "5.3.2 To select the piping size" on page 13.

4P353997-1A_5

12 Installation

12 - 3 Refrigerant Pipe Selection

REYQ-T

VRV4
Heat recovery Piping restrictions

		Maximum piping length			Maximum height difference			Total piping length
		Longest pipe from the outdoor unit or the last multi-putdoor piping branch Actual + Equivalent Maximum: ·(A+B, A+C, A+E, A+F)	Longest pipe after first branch Actual Maximum: ·(B,C,E,F)·	Longest pipe from the outdoor unit to the last multi-outdoor piping Actual / Equivalent Maximum: ·(D)·	Indoor-to-outdoor Outdoor unit higher than indoor unit/ Indoor unit higher than outdoor unit Maximum: ·(H1)·	Indoor-to-indoor Maximum: ·(H2)·	Outdoor-to-outdoor Maximum: ·(H3)·	Piping length
Single outdoor units and standard multi-outdoor-unit combinations > ·20hp·	·VRV ·indoor units only	165/190 m (*3)	40 m (*1)	10/13 m	50 m (*2)	15 m	5 m	1000 m
	Hydrobox unit	135/160 m (*3)	40 m		50/40 m			300 m (*4)/600 m (*5)
	AHU (*6)	165/190 m (*3)	40 m		50/40 m			1000 m
Standard multi-outdoor-unit combinations · ≤ 20hp · and free multi-outdoor-unit combinations	·VRV ·indoor units only	135/160 m (*3)	40 m (*1)	10/13 m	50/40 m (*2)	15 m	5 m	500 m
	Hydrobox unit		40 m		50/40 m			300 m (*4)/500 m (*5)
	AHU (*6)		40 m		50/40 m			500 m

	Maximum piping length	Maximum height difference
	EXV --> AHU: G	EXV --> AHU: H4
AHU (*6)	5 m	5 m

NOTES

1. If all conditions below are met, the limitation can be extended up to 90m
   - 1.1 In case of · BS1Q · units, the piping length between all indoor units and the multi BS unit is ≤ · 40 · m
   - 1.2 In case of multi BS units, the piping length between all indoor units and the multi BS unit is ≤ · 40 · m
   - 1.3 It is required to size up the liquid piping between the first branch kit and the last.
     In contrast to multi BS units, · BS1Q · units are not considered branch kits. If the increased pipe size is larger than the pipe size of the main pipe, also increase the size of the main pipe.
   - 1.4 When the piping size is increased, the piping length has to be counted as double. The total piping length has to be within limitations.
   - 1.5 The piping length difference between the nearest indoor unit to the outdoor unit and the farthest indoor unit te the outdoor unit is ≤ · 40 · m.
2. If all conditions below are met, the limitation can be extended up to 90m
   - 2.1 If the outdoor units are positioned higher than the indoor units:
     - 2.1.1. Minimum connection ratie: · 80% ·
     - 2.1.2. Size up the liquid piping
     - 2.1.3. Outdoor unit setting.
     - For more information, refer to the service manual.
   - 2.2. If the outdoor units are positioned lower than the indoor unit:
     - 2.2.1 No technical cooling
     - 2.2.2. Size up the liquid piping
     - 2.2.3. Outdoor unit setting
     - 2.2.4. Minimum connection ratie
       - -40~60m: Minimum connection ratie: · 80% ·
       - -60~65m: Minimum connection ratie: · 90% ·
       - -65~80m: Minimum connection ratie: · 100% ·
       - -80~90m: Minimum connection ratie: · 110% ·
3. If the equivalent piping is > · 90 · m, size up the main liquid piping.
4. Outdoor unit is · ≤ 20hp ·
5. Outdoor unit is · > 20hp
6. Mix of · DX · units and · AHU's ·
7. If there is no branch kit present in the system, the longest pipe after the multi · BS · unit has to be ≤ · 40 · m.

3D088012A

12 Installation

12 - 3 Refrigerant Pipe Selection

REYQ-T

VRV4
Heat recovery Piping restrictions

	Total		Allowed capacity			
	Capacity [%]	Maximum indoor unit quantity (*1)	VRV indoor unit	·VRV·indoor unit without ·BS·unit Cooling only (*4)	Hydrobox unit	AHU
·VRV·indoor units only	50~130	64	50~130 %	0~50 %	*Not allowed*	*Not allowed*
·VRV· indoor unit + Hydrobox	50~200 (*2)	32	50~110 %	0~50 %	0~100 %	*Not allowed*
·VRV ·indoor unit + ·AHU's ·	50~110	64	50~110 %	0~50 %	*Not allowed*	0~110 %

NOTES

1. Excluding ·BS ·units and including ·EXV·kits.
2. The total capacity of ·DX ·indoor units and LT Hydrobox units is ·130·%.
3. Other combinations than mentioned in this combination table are prohibited.
4. Cooling-only ·VRV·indoor units cannot be combined with HT Hydrobox units.

Amount of units connectiable to a·BS·unit

	BS1Q10 (*6)	BS1Q16 (*6)	BS1Q25 (*6)	Multi ·BS branch (*6)	Multi ·BS·when 2 branches are combined (*5) (*6) (*5) (*6)
·VRV·indoor units AHU	Maximum·6·units Maximum ·100 ·class	Maximum·8·units Maximum ·160 ·class	Maximum·8·units Maximum ·250 ·class	Maximum·5·units Maximum ·140 ·class	Maximum·5·units Maximum ·250 ·class
LT Hydrobox unit	Maximum ·100 ·class = 1x HXY080	Maximum ·160 ·class = Maximum ·2 x HXY080· Or maximum ·1 x HXY125·	Maximum ·250 ·class = Maximum ·3 x HXY080 · Or maxium ·2 x HXY125 · Or ·HXY125 ·	Maximum ·140 ·class = Maximum ·1 x HXY080· Or maximum ·1 x HXY125·	Maximum ·250 ·class = Maximum ·3 x HXY080· Or maximum ·2 x HXY125· Or ·HXY080 + HXY 125 ·

NOTES

5. When combining ·2·branches, the maximum piping length between the·BS·unit and the indoor unit is ≤ 20m. If the length of this piping is > 20m increase the size of the liquid pipe.
6. When using Hydrobox units, do not combine them with other types of units.

3D088012A

12 Installation

12 - 3 Refrigerant Pipe Selection

REYQ-T

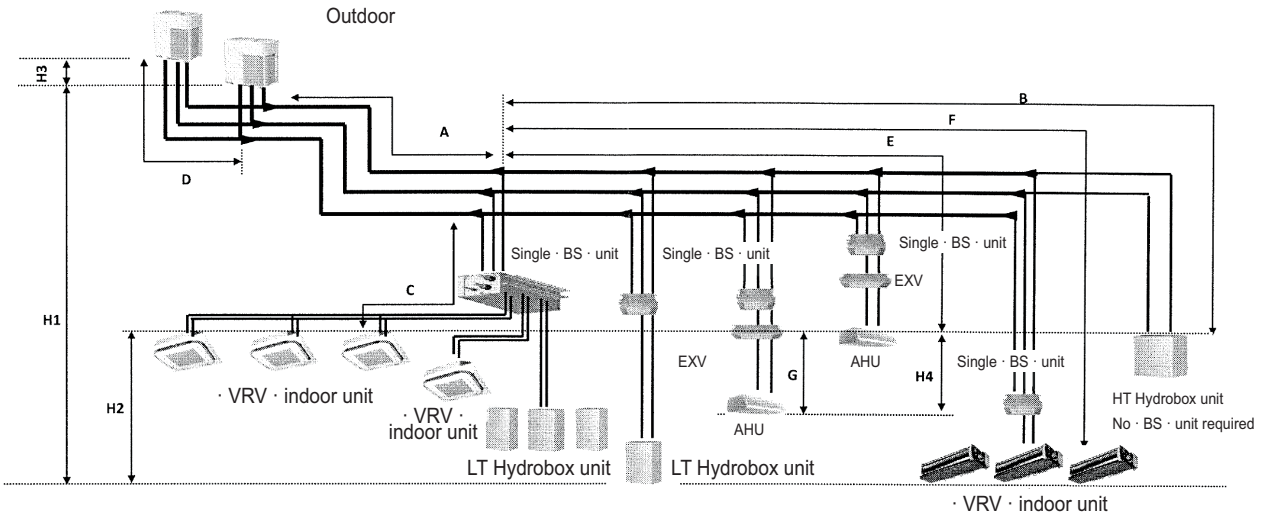

3D088012A

13 Operation range

13 - 1 Operation Range

REYQ-T
REMQ-T

·DX· cooling

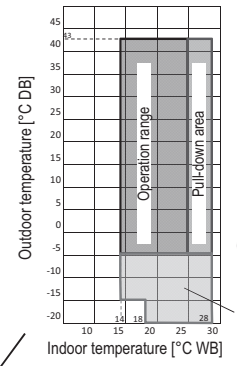

·LT hydro · cooling

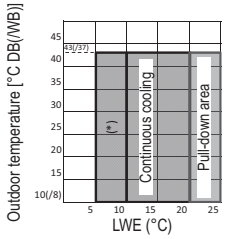

·LT · space heating
No domestic hot water

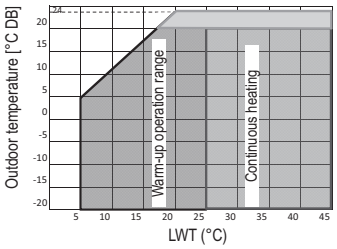

·HT · domestic hot water

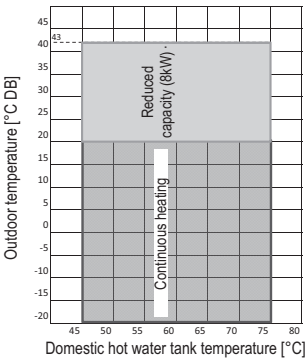

(*) : Only possible after field setting activation.
Influences ·DX · cooling operation (cold draft) and the total efficiency.

Technical cooling (by field setting)

Technical cooling restrictions
- A wind cover is required.
- Cooling capacity decrease below -5 °C
- ·COP · (VRT) decrease
- Possible ·BS · unit noise increase
- Piping restrictions
- No multi ·BS · unit

·DX · heating

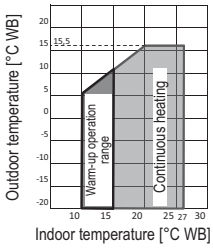

·HT · space heating

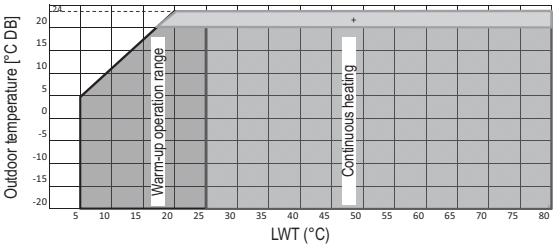

3D088014

Daikin Europe N.V. participates in the Eurovent Certification programme for Liquid Chilling Packages (LCP), Air handling units (AHU), Fan coil units (FCU) and variable refrigerant flow systems (VRF) Check ongoing validity of certificate online: www.eurovent-certification.com or using: www.certiflash.com

The present leaflet is drawn up by way of information only and does not constitute an offer binding upon Daikin Europe N.V.. Daikin Europe N.V. has compiled the content of this leaflet to the best of its knowledge. No express or implied warranty is given for the completeness, accuracy, reliability or fitness for particular purpose of its content and the products and services presented therein. Specifications are subject to change without prior notice. Daikin Europe N.V. explicitly rejects any liability for any direct or indirect damage, in the broadest sense, arising from or related to the use and/or interpretation of this leaflet. All content is copyrighted by Daikin Europe N.V.

BARCODE

Daikin products are distributed by:

DAIKIN EUROPE N.V. Naamloze Vennootschap - Zandvoordestraat 300, B-8400 Oostende - Belgium - www.daikin.eu - BE 0412 120 336 - RPR Oostende

EEDEN15-200_4 04/15 Copyright Daikin
The present publication supersedes EEDEN14-200_4