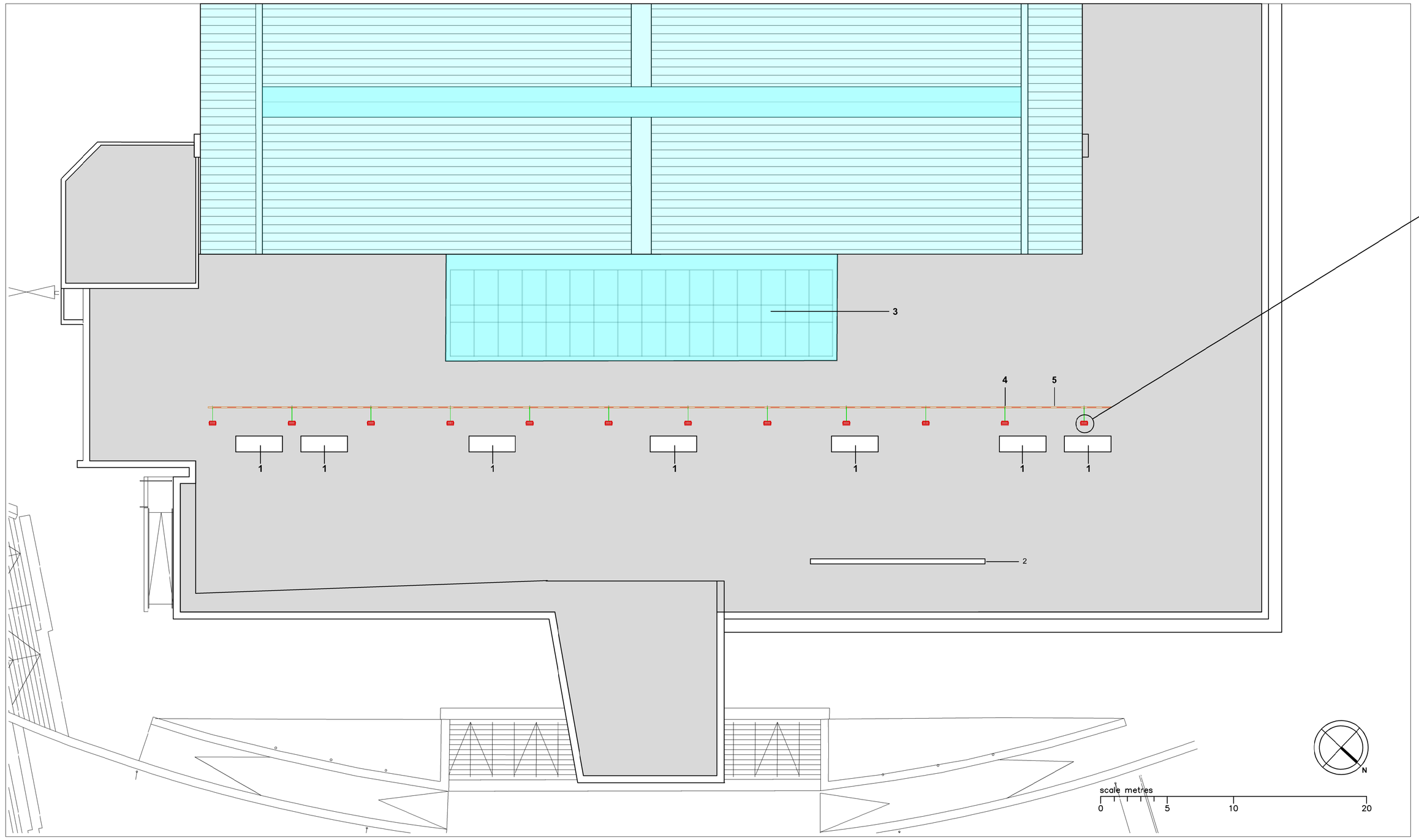

Proposed Roof Plan

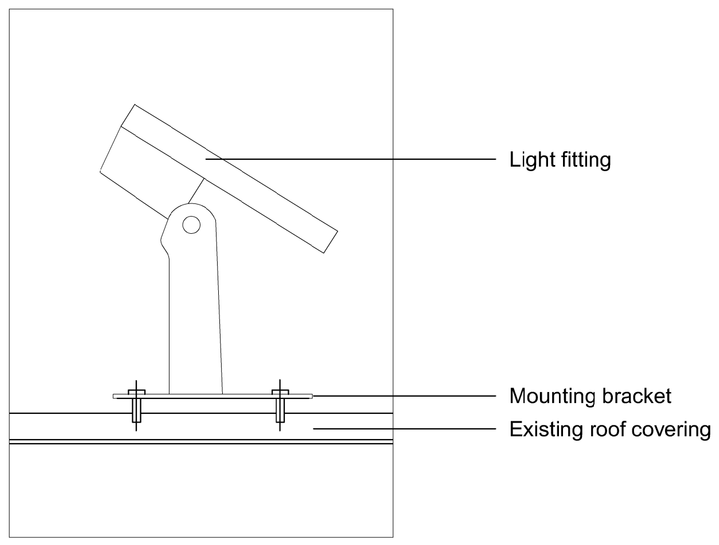

Elevation of Type 36Qa light fitting
scale 1/10

Key

- Original building
- 2008 Extension
- 12 no Iluminarc Colourist Panel 36Qa LED up-lightersattached to non-original fabric using mounting bracket
- Proposed cable tray
- Cable from cable tray to light fitting

Notes

1 Existing roof-mounted air conditioning unit

2 Roof-mounted, stainless steel, freestanding Manchester Central letters

3 Glazed rooflight added as part of the 2008 extension

4 New junction box for each light fitting

5 Cable goes into proposed electrical riser

Rev	Date	By	Description

Planning

Richard Drinkwater Architects
Unit 8, Oak Green, Stanley Green Business Park,
Cheadle Hulme, Cheadle SK8 6QL
t 0161 358 1101 e richard@drinkwaterarchitects.com

Project	Facade Lighting Scheme
Location	Manchester Central, Windmill Street, Manchester M2 3GX
Title	Proposed Roof Plan
Drawing No	07487_03
Revision	-
Scale	1:200 @ A1
Drawn By	RD
Date	10.08.18

© Copyright Richard Drinkwater Architects 1998 - 2018