COPYRIGHT RESERVED
DO NOT SCALE FROM THIS DRAWING

NOTES

To be read in conjunction with BCA drawings 04+06

NORTH

REFER TO BCA DRAWING 04 FOR CONTINUATION

REFER TO BCA DRAWING 06

KEY

EXISTING HEDGEROW AND TREES TO BE RETAINED

SEMI-MATURE TREE
(*Tree pit size: 2000x2000x1000mm backfilled with topsoil*)
20-25cm stem girth
6.0-7.0m height
2.1m+ clear stem
Rootballed

Ls Liquidamber styraciflua

EXTRA HEAVY STANDARD TREES
FASTIGIATE FORM
(*Tree pit size: 1500x1500x900mm backfilled with topsoil*)
18-20cm stem girth
4.5-6.5m height
1.8-2.1m clear stem
Rootballed

Cb'L' Carpinus betulus 'Lucas'

EXTRA HEAVY STANDARD TREES
(*Tree pit size: 1000x1000x750mm backfilled with topsoil*)
14-16cm girth
4.25-5.5m height
1.8-2.1m clear stem
Rootballed

Ac Acer campestre
Ag Alnus glutinosa
Pp Prunus padus
Tc'G' Tilia cordata 'Greenspire'

PROPOSED MULTI-STEM TREES
(*Tree pit size: 1000x1000x750mm backfilled with topsoil*)
3.5-4.0m height
5x transplanted
Rootballed

Buj Betula utilis jacquemontii

PROPOSED SPECIMEN SHRUBS
(*300mm depth of topsoil*)

Species	Supply Size	Pot Size
Amelanchier canadensis	900-1200mm	15L
Miscanthus sinensis 'Ferner Osten'	Clump	7.5L

PROPOSED ORNAMENTAL SHRUB PLANTING
(*300mm depth of topsoil*)
Ultimate plant height is above 1m.

Species	Supply Size	Pot Size	Spacing
Photinia fraserii 'Red Robin'	400-600mm	3L	750mm c/s
Spiraea nipponica 'Snowmound'	400-600mm	3L	600mm c/s
Philadelphus 'Belle Etoile'	400-600mm	3L	600mm c/s

PROPOSED LOW GROUNDCOVER PLANTING
(*300mm depth of topsoil*)
Ultimate plant height is below 1m.

Species	Supply Size	Pot Size	Spacing
Choisya 'Aztec Pearl'	300-400mm	3L	500mm c/s
Euonymus fortunei 'Emerald Gaiety'	200-300mm	3L	450mm c/s
Genista lydia	300-400mm	3L	450mm c/s
Hebe 'Oratia Beauty'	300-400mm	3L	500mm c/s
Hebe pinguifolia 'Sutherlandii'	200-300mm	3L	500mm c/s
Lavandula angustifolia 'Hidcote'	200-300mm	3L	450mm c/s
Lonicera pileata	300-400mm	2L	500mm c/s
Luzula sylvatica	Clump	2L	450mm c/s
Pachysandra terminalis	150-200mm	2L	400mm c/s
Persicaria affinis 'Darjeeling Red'	Clump	2L	350mm c/s
Potentilla fruticosa 'Elizabeth'	200-300mm	3L	500mm c/s
Rosa 'Kent'	300-400mm	3L	450mm c/s
Rosmarinus officinalis	300-400mm	2L	450mm c/s

PROPOSED MEADOW SEEDED AREAS
(Cultivated subsoil to a depth of *300mm*)
Area to be sown with Emorsgate EM4 Meadow mixture for clay soils at a rate of 4g/m²

PROPOSED MOWN GRASS AREAS
(*150mm depth of topsoil*)
Area to be sown with DLF Seeds Ltd
PM 125 Clearsky mix at a rate of 20g/m²

PROPOSED THICKET MIX PLANTING
(*300mm depth of topsoil*)
Where woodland or thicket is planted next to a hard surface/kerb/fence, it should be positioned 1m from the edge.Transplants planted in groups of 3-15 of the same species on a 1.0m grid.
Rabbit Protection: Shelter guards for whips/ transplants

%	Species	Common Name	Size	Age	Root	TH2 (369m²)	TH3 (88m²)
3%	Acer campestre	Field Maple	400-600mm	1+1	OG	11no.	3no.
17%	Corylus avellana	Hazel	400-600mm	1+1	OG	65no.	15no.
27%	Crataegus monogyna	Hawthorn	400-600mm	1+1	OG	100no.	22no.
5%	Ilex aquifolium	Holly	400-600mm		2L	18no.	4no.
2%	Lonicera pericyclamen	Honeysuckle	300-400mm		2L	7no.	2no.
2%	Rosa arvensis	Field Rose	300-400mm		2L	7no.	2no.
3%	Rosa canina	Dog Rose	300-400mm		2L	11no.	3no.
15%	Prunus spinosa	Blackthorn	600-800mm	1+1	OG	55no.	13no.
3%	Sambucus nigra	Elder	600-800mm	1+1	OG	11no.	3no.
10%	Salix caprea	Goat willow	600-800mm	1+0	OG	37no.	9no.
3%	Salix cinerea	Grey Willow	600-800mm	1+0	OG	11no.	3no.
5%	Viburnum opulus	Guelder Rose	600-800mm	1+1	OG	18no.	4no.

Feathered Trees - Well furnished with lateral roots to the base.

%	Species	Common Name	Size	Root	TH2	TH3
2%	Acer campestre	Field Maple	1.8-2.1m height	BR	7no.	2no.
3%	Corylus avellana	Hazel	1.8-2.1m height	BR	11no.	3no.
				Total	369	88

PROPOSED ORNAMENTAL HEDGEROW
(*300mm depth of topsoil*)
Planted at 450mm centres in a double staggered row.
Rows to be 500mm apart. Hedge to be maintained at 1m high.

Species	Size	Pot Size
Escallonia 'Donard Seedling'	400-600mm	3L

PROPOSED ORNAMENTAL HEDGEROW (LOW CLIPPED)
(*300mm depth of topsoil*)
Planted at 300mm centres in a double staggered row.
Rows to be 300mm apart. Hedge to be maintained at 0.5m high.

Species	Size	Pot Size
Lonicera nitida	300-400mm	2L

FENCE

SITE BOUNDARY

PROPOSED INDIGENOUS HEDGEROW
(*300mm depth of topsoil*)
Planted as double staggered row, plants at 350mm centres and rows set 350mm apart. Back row to be 100% Crataegus. Remaining species to be random mixed in groups of 3-5 in front row.
Rabbit Protection: Shelter guards for whips/ transplants

%	Species	Common Name	Size	Age	Root	NH3 (52lin m)	NH4 (65lin m)	NH5 (62lin m)	NH6 (88lin m)	NH7 (39lin m)	NH8 (24lin m)
7%	Acer campestre	Field maple	600-800mm	1+1	OG	20no.	26no.	25no.	35no.	16no.	10no.
8%	Corylus avellana	Hazel	600-800mm	1+1	OG	24no.	30no.	28no.	40no.	18no.	11no.
50%	Crataegus monogyna	Hawthorn	600-800mm	1+1	OG	149no.	186no.	177no.	252no.	112no.	69no.
5%	Ilex aquifolium	Holly	400-600mm		2L	15no.	19no.	18no.	25no.	11no.	7no.
2%	Lonicera pericyclamen	Honeysuckle	300-400mm		2L	6no.	7no.	7no.	10no.	4no.	3no.
20%	Prunus spinosa	Blackthorn	600-800mm	1+1	OG	59no.	75no.	71no.	101no.	45no.	25no.
2%	Rosa arvensis	Field rose	300-400mm		2L	6no.	7no.	7no.	10no.	4no.	3no.
2%	Rosa canina	Dog rose	300-400mm		2L	6no.	7no.	7no.	10no.	4no.	3no.
2%	Salix caprea	Goat willow	600-800mm	1+0	OG	6no.	7no.	7no.	10no.	4no.	3no.
2%	Salix cinerea	Grey willow	600-800mm	1+0	OG	6no.	7no.	7no.	10no.	4no.	3no.
					Total	297	371	354	503	223	137

PROPOSED INDIGENOUS HEDGEROW (TRIPLE ROW)
(*300mm depth of topsoil*)
Planted as triple staggered row, plants at 350mm centres and rows set 350mm apart. Back row to be 100% Crataegus. Remaining species to be random mixed in groups of 3-5 in front row.
Rabbit Protection: Shelter guards for whips/ transplants

%	Species	Common Name	Size	Age	Root	NH2 (143lin m)
7%	Acer campestre	Field maple	600-800mm	1+1	OG	86no.
8%	Corylus avellana	Hazel	600-800mm	1+1	OG	98no.
50%	Crataegus monogyna	Hawthorn	600-800mm	1+1	OG	613no.
5%	Ilex aquifolium	Holly	400-600mm		2L	61no.
2%	Lonicera pericyclamen	Honeysuckle	300-400mm		2L	25no.
20%	Prunus spinosa	Blackthorn	600-800mm	1+1	OG	243no.
2%	Rosa arvensis	Field rose	300-400mm		2L	25no.
2%	Rosa canina	Dog rose	300-400mm		2L	25no.
2%	Salix caprea	Goat willow	600-800mm	1+0	OG	25no.
2%	Salix cinerea	Grey willow	600-800mm	1+0	OG	25no.
					Total	1226

9no. Tc'G'
4no. Tc'G'
56no. Pachysandra terminalis@400c/s
59no. Philadelphus 'Belle Etoile'@600c/s
1no. Ls
84no. Hebe pinguifolia 'Sutherlandii'@500c/s
75no. Rosmarinus officinalis@450c/s
60no. Rosmarinus officinalis@450c/s
60no. Hebe pinguifolia 'Sutherlandii'@500c/s
1no. Ls
NH3
1no. Amelanchier canadensis
72no. Persicaria affinis 'Darjeeling Red'@350c/s
60no. Lonicera pileata@500c/s
20no. Lonicera pileata@500c/s
7no. Tc'G'
15no. Luzula sylvatica@450c/s
16no. Lonicera pileata@500c/s
20no. Euonymus fortunei 'Emerald Gaiety'@450c/s
20no. Lonicera pileata@500c/s
NH4
25no. Euonymus fortunei 'Emerald Gaiety'@450c/s
24no. Lonicera pileata@500c/s
50no. Euonymus fortunei 'Emerald Gaiety'@450c/s
NH5
NH6
NH7
NH8
1no. Amelanchier canadensis
40no. Lonicera pileata@500c/s
1no. Amelanchier canadensis
80no. Lonicera pileata@500c/s
1no. Amelanchier canadensis
85no. Luzula sylvatica@450c/s
40no. Euonymus fortunei 'Emerald Gaiety'@450c/s
63no. Pachysandra terminalis@400c/s
55no. Euonymus fortunei 'Emerald Gaiety'@450c/s
88no. Pachysandra terminalis@400c/s
3no. Pp
2no. Ac
TH2
TH3
4no.Tc'G'
5no. Cb'L'
30no. Rosa 'Kent'@450c/s
24no. Potentilla fruticosa 'Elizabeth'@500c/s
25no. Rosa 'Kent'@450c/s
20no. Potentilla fruticosa 'Elizabeth'@500c/s
25no. Rosa 'Kent'@450c/s
62no. Spiraea nipponica 'Snowmound'@600c/s

ORNAMENTAL HEDGEROW
244no. Escallonia 'Donard Seedling'
This hedgerow is to be planted either side of a post and 3wire fence, refer to BCA drawing 1881-18-11 for fence details.

ORNAMENTAL HEDGEROW 133no. Escallonia 'Donard Seedling'
ORNAMENTAL HEDGEROW 73no. Lonicera nitida
ORNAMENTAL HEDGEROW 73no. Lonicera nitida
ORNAMENTAL HEDGEROW 89no. Escallonia 'Donard Seedling'
ORNAMENTAL HEDGEROW 73no. Lonicera nitida
ORNAMENTAL HEDGEROW 120no. Escallonia 'Donard Seedling'
ORNAMENTAL HEDGEROW 73no. Lonicera nitida
ORNAMENTAL HEDGEROW 73no. Lonicera nitida
ORNAMENTAL HEDGEROW 89no. Escallonia 'Donard Seedling'
ORNAMENTAL HEDGEROW 73no. Lonicera nitida
ORNAMENTAL HEDGEROW 67no. Escallonia 'Donard Seedling'
ORNAMENTAL HEDGEROW 67no. Escallonia 'Donard Seedling'
ORNAMENTAL HEDGEROW 73no. Lonicera nitida
ORNAMENTAL HEDGEROW 73no. Lonicera nitida
ORNAMENTAL HEDGEROW 89no. Escallonia 'Donard Seedling'
ORNAMENTAL HEDGEROW 73no. Lonicera nitida
ORNAMENTAL HEDGEROW 73no. Lonicera nitida
ORNAMENTAL HEDGEROW 36no. Escallonia 'Donard Seedling'
ORNAMENTAL HEDGEROW 73no. Lonicera nitida
ORNAMENTAL HEDGEROW 73no. Lonicera nitida
ORNAMENTAL HEDGEROW 213no. Lonicera nitida
ORNAMENTAL HEDGEROW 193no. Lonicera nitida
ORNAMENTAL HEDGEROW 73no. Lonicera nitida
ORNAMENTAL HEDGEROW 80no. Escallonia 'Donard Seedling'
ORNAMENTAL HEDGEROW 58no. Escallonia 'Donard Seedling'
ORNAMENTAL HEDGEROW 167no. Lonicera nitida
ORNAMENTAL HEDGEROW 71no. Escallonia 'Donard Seedling'

DETAIL - A
DETAIL - B
DETAIL - C

DETAIL - A
Scale 1:50

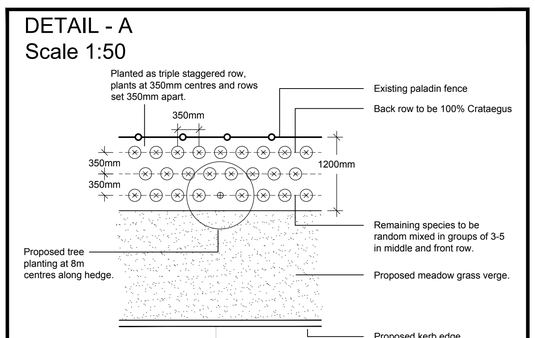

DETAIL - B
Scale 1:50

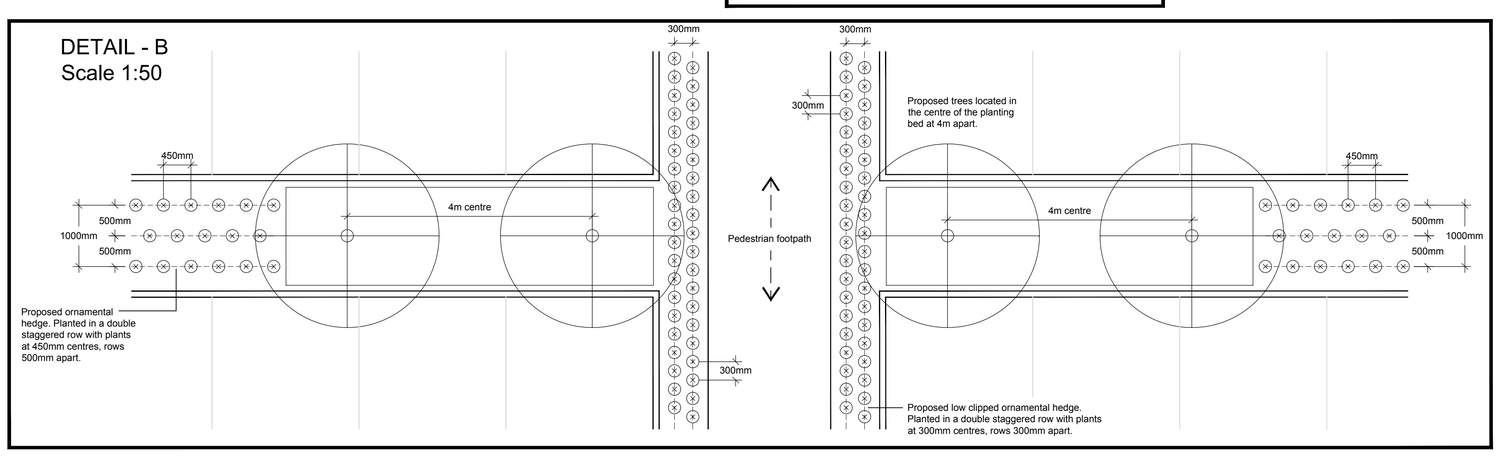

DETAIL - C
Scale 1:50

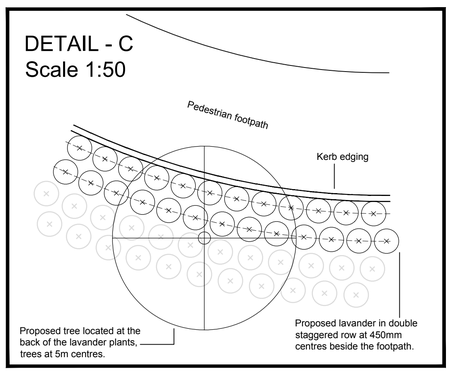

SCALE 1:250 0 6.25 12.5 18.75 25m

SCALE 1:1 0 10 20 30 40 50 60 70 80 90 100mm

REV NOTE DATE AUTH

BCA BARRY CHINN associates Landscape Architects

CLIENT
ICON INDUSTRIAL

PROJECT
ICON MANCHESTER AIRPORT
THE HUT GROUP

DRAWING
DETAILED PLANTING PLAN
2 of 3

CONTRACT 1881/18			DRG NO. 05
DATE 07/11/18	DRAWN JP		
ISSUE Tender	CHECKED MB		
SCALE 1:250	ORIG SHEET A0		REV -
CAD FILE 1881-18-04+05+06 Detailed Planting Plan.dwg			

Barry Chinn Associates Limited: Harbury Road, Deppers Bridge, Southam, Warwickshire CV47 2SZ
T +44 (0)1926 614031 F +44 (0)1926 614433 E gen@bca-landscape.com W www.bca-landscape.com