SPECIFICATION FOR SOFT LANDSCAPE WORKS

at

ICON MANCHESTER AIRPORT
THE HUT GROUP

Doc Ref No: 1881-18-SP07

Date: 16-11-18

BCA BARRY CHINN associates Landscape Architects

Prepared by:
BARRY CHINN ASSOCIATES LTD.
Harbury Road
Deppers Bridge
Southam
Warwickshire
CV47 2SZ

Ref:	1881-18-SP07
Author:	JP
Checked:	MB
Date	16-11-18

INDEX TO SPECIFICATION

SECTION 1 - PRELIMINARIES

SECTION 2 - PREAMBLES

SECTION 3 - SCHEDULE OF WORK

SECTION 4 - GENERAL SUMMARY

Appendix A -Earthworks Specification (for reference only)

Appendix B Drawings;

1881-18-02 - Earthworks Plan
1881-18-03 - Earthworks Sections
1881-18-04 - Detailed Planting Plan 1of3
1881-18-05 - Detailed Planting Plan 2of3
1881-18-06 - Detailed Planting Plan 3of3
1881-18-07 - Double Stake Tree Pit Detail
1881-18-08 - Angled Stake Tree Pit Detail
1881-18-09 - Semi Mature Tree Pit Detail
1881-18-10 - Shelterguards & Spiralguards
1881-18-11 - Post and Wire Fence Detail

Appendix C Designers risk assessments
-Soft Landscape Works
-Earthworks (for reference only)

SECTION 1

PRELIMINARIES

Refer to separate Preliminaries information that should be issued with the tender documentation by the main contractor. The tender sum applicable to the Preliminaries should be inserted on the General Summary page 4/1 in the space provided.

Please note that all Topsoiling & Earthworks operations are to be carried out by the Main Contractor and the specification for this is included in Appendix A of this document for reference.

SECTION 2

PREAMBLES

Q30

SEEDING/TURFING

Q30 Seeding/turfing

GENERAL INFORMATION/REQUIREMENTS

105 TOPSOILING

- At the time of starting the seeding/turfing works all areas to be seeded or turfed will be covered by:
  Either 150mm depth topsoil or undisturbed topsoil prepared as necessary by others.

107 SUITABILITY OF TOPSOILING

- The Landscape Contractor shall liaise with the Main Contractor during preparation of formation level and topsoiling.
- Prior to starting work the Contractor shall inspect areas to be seeded or turfed to satisfy himself that after the specified preparation the topsoil will be suitable for seeding/turfing.
- Seeding/turfing will be taken as further acceptance by the Contractor as to the suitability of the topsoil.

115 SEEDED AND TURFED AREAS

- Growth and development: Healthy, vigorous grass sward, free from the visible effects of pests, weeds and disease.
- Appearance: A closely knit, continuous ground cover of even density, height and colour.

121 CLIMATIC CONDITIONS

- General: Carry out the work while soil and weather conditions are suitable.
- Appropriate seasons:
  Grass seeding - mid-August to mid-October and mid-April to mid-May.
  Turfing - mid-September to mid-April.
- The above periods may be subject to modification according to the prevailing weather conditions. However, the Contractor may not carry out works other than during the above seasons without written authorisation from the Contract Administrator.

145 WATERING

- Quantity: Wet full depth of topsoil.
- Application: Even and without displacing seed, seedlings or soil.
- Frequency: As necessary to ensure the establishment and continued thriving of all seeding/turfing.

150 WATER RESTRICTIONS

- Timing: If water supply is or is likely to be restricted by emergency legislation do not carry out seeding/turfing until instructed. If seeding/turfing has been carried out, obtain instructions on watering.

160 NOTICE

- Give notice before:
  - Setting out.
  - Applying herbicide.
  - Applying fertilizer.
  - Preparing seed bed.
  - Seeding or turfing.
  - Visiting site during maintenance period.
- Period of notice: 1 week.

170 SETTING OUT
- Boundaries: Mark clearly.
- Delineation: In straight lines or smoothly flowing curves as shown on drawings.

PREPARATION

205 PREPARATION MATERIALS
- General: Free from toxins, pathogens or other extraneous substances harmful to plant, animal or human life.
- Certification of source, analysis, suitability for purpose and absence of harmful substances: Submit.
  - Certified materials: For each of the following materials submit a certificate giving supply source, content analysis, confirmation of suitability for purpose and confirmation of absence of harmful substances: herbicides, fertiliser, compost and grass seed..
  - Give notice: before ordering or using.

211 HERBICIDE FOR GRASSED AREAS
- Type: Suitable herbicide for suppressing of perennial weeds.
- Timing: Allow a period of time to elapse, as recommended by the manufacturer, before commencing cultivation.
- Notify the Contract Administrator of the type of herbicide to be used and when application is to be carried out.

212 SEED BED CLEANING BEFORE SOWING ALL GRASSED AREAS
- Operations: Kill pernicious weeds with selective contact herbicide..

231 PEAT
- Peat or products containing peat: Do not use.

251 CULTIVATION
- Compacted topsoil: Break up to full depth.
- Tilth: Reduce top 100 mm of topsoil to a tilth suitable for blade grading, particle size 10 mm (maximum) and remove all weed growth.
- Material brought to the surface: Remove stones and clay balls larger than 50 mm in any dimension, roots, tufts of grass, rubbish and debris.

260 GRADING
- Topsoil condition: Reasonably dry and workable.
- Contours: Smooth and flowing, with falls for adequate drainage.
  - Hollows and ridges: Not permitted.
- Finished levels after settlement: 25 mm above adjoining paving, kerbs, manholes etc.
- Blade grading: May be used to adjust topsoil levels provided depth of topsoil is nowhere less than 150 mm .
- Give notice: If required levels cannot be achieved by movement of existing soil.

275 FERTILIZER FOR SEEDED AREAS EXCEPT WILD FLOWER MEADOWS
- Type: Pre-seeding.
- Manufacturer: DLF Trifolium Ltd, Thorn Farm, Inkberrow, Worcs, WR7 4LJ. Tel 01386 791102, or similar approved.
  - Product reference: Pro Fert 1 Pre-seeder fertiliser, 6+9+6, pre- seeding fertiliser or equivalent.
- Application: Before final cultivation and three to five days before seeding/ turfing.
  - Rate: Spread evenly at 35-70 gms/m² in accordance with manufacturer's recommendations.

280 FINAL CULTIVATION
- Timing: After grading and fertilizing.
- Seed bed: Reduce to fine, firm tilth with good crumb structure.
  - Depth: 25 mm.
  - Surface preparation: Rake to a true, even surface, friable and lightly firmed but not over compacted.
  - Remove surface stones/earth clods exceeding:
    General areas: 30 mm.
    Fine lawn areas: 10 mm.
- Adjacent levels: Extend cultivation into existing adjacent grassed areas sufficient to ensure full marrying in of levels.

SEEDING

313 GRASS SEED GENERAL AREAS
- Supplier: DLF Trifolium Ltd, Thorn Farm, Inkberrow, Worcs, WR7 4LJ. Tel 01386 791102 or as scheduled and shown on drawings.
  - Mixture reference: Pro Master 125 Clearsky mix .
- Application rate: 20g/m².
- Other requirements: to be sown in accordance with manufacturer's recommendations

314 WILDFLOWER SEED MIXTURE FOR WILDFLOWER MEADOWS
- Supplier: EMORSGATE SEEDS, Limes Farm, Tilney All Saints, King's Lynn, Norfolk, PE34 4RT, Tel 01553 829028 or as scheduled and shown on drawings.
  - Mixture reference: Emorsgate EM4 Meadow mixture.
- Origin of each species (as defined in Flora Locale's Code of practice for collectors, growers and suppliers of native flora): UK origin.
- Application rate: 4g/m².

319 QUALITY OF SEED FOR ALL GRASSED AREAS
- Freshness: Produced for the current growing season.
- Certification: Blue label certified varieties.
  - Standard: EC purity and germination regulations.
  - Official Seed Testing Station certificate of germination, purity and composition: Submit when requested.
- Samples of mixtures: Submit when requested.

330A SOWING
- General: Establish good seed contact with the root zone to promote healthy, consistent growth.
- Method: To suit soil type, proposed usage, location and weather conditions during and after sowing.
  - Distribution: Seeding shall be carried out in two equal sowings in transverse directions at the overall rate per square metre specified in the Schedule of Work..
- Lightly harrow or rake after seeding.

333 SOWING SEASON
- Sow seed in calm weather during April to October.
- Sowing of seed shall take place during suitable calm weather conditions as soon as areas become available between the specified dates.
- Seeding shall not be carried out when persistent cold or drying winds are likely to occur or soil is frost bound, waterlogged or excessively dry.

336 WILDFLOWER SOWING SEASON
- Wildflower seed generally: March to May or August to October.

341 PRE-EMERGENT HERBICIDE FOR ALL GRASSED AREAS
- General: Where soil has not been allowed to lie fallow apply a suitable pre-emergent herbicide immediately after sowing.
- Standard: Pesticide Safety Directorate approved.
- Application rate: In accordance with manufacturer's written recommendation.
  - Timing: Immediately after sowing.

352 EDGES TO SEEDED AREAS ADJACENT TO PLANTING BEDS AND TREE PITS
- Timing: After seeded areas are well established.
- Edges: Clean straight lines or smooth curves.
  - Mulch and soil: Draw back to permit edging.
- Arisings: Remove.
- Completion: Respread soil and mulch.

CUTTING

530 FIRST CUT OF GRASSED AREAS
- Timing: When grass is reasonably dry.
  - Height of initial growth: 50-75mm.
- Preparation:
  - Debris and litter: Remove.
  - Stones and earth clods larger than 25 mm in any dimension: Remove
- Height of first cut: 50 mm.
- Mower type: Contractor's choice.
- Arisings: Remove from site.

540 FIRST CUT OF WILDFLOWER MEADOWS
- Height of initial growth: 75mm +.
- Preparation:
  - Debris and litter: Remove.
  - Stones and earth clods larger than 25 mm in any dimension: Remove
- Height of first cut: 75mm.
- Mower type: Contractor's choice.
- Arisings: Remove from site.

590 CLEANLINESS
- Soil and arisings: Remove from hard surfaces.
- General: Leave the works in a clean, tidy condition at Completion and after any maintenance operations.

MAINTENANCE

MAINTENANCE GENERALLY
The Contractor shall physically maintain the whole of the soft landscape works within the contract boundaries in accordance with the Contract Documentation. The period of maintenance will be twelve months following Practical Completion. REFER TO SECTION Q35 FOR DETAILS OF MAINTENANCE

605A MAINTENANCE UP TO PRACTICAL COMPLETION
- Duration: From the completion of seeding and turfing until the date of Practical Completion.
- All turfed and seeded areas shall be maintained in accordance with the requirements of section Q35 entirely at the contractor's expense until accepted for handover.

610 FAILURES OF SEEDING/TURFING

- Duration: Carry out the following operations from completion of seeding/ turfing until: the end of the rectification period.
- Defective materials or workmanship: Areas that have failed to thrive.
  - Exclusions: Theft or malicious damage.
- Method of making good: Recultivation and reseeding/ returfing.
- Timing of making good: The next suitable planting season.

Q31

EXTERNAL PLANTING

Q31 External planting

GENERAL INFORMATION/ REQUIREMENTS

GENERALLY

- The whole of the works shall be executed in an efficient and workmanlike manner to the satisfaction of the Contract Administrator.
- All materials and workmanship shall be in accordance with the appropriate current British Standard except where otherwise stated.

112 SITE CLEARANCE GENERALLY

- General: Remove rubbish, concrete, metal, glass, decayed vegetation and contaminated topsoil.
- Stones: Remove those with any dimension exceeding 50 mm.
- Contamination: Remove material containing toxins, pathogens or other extraneous substances harmful to plant, animal or human life.
- Vegetation: Clear surface vegetation in areas shown on drawings using suitable nonresidual herbicide.
- Large roots: Grub up and dispose of without undue disturbance of soil and adjacent areas.
- Additional requirements: Apply a suitable non-residual herbicide to all areas to be planted if necessary. Notify Contract Administrator of the herbicide prior to application.

113 CLEARANCE OF VEGETATION

- Where trees or shrubs are to be removed, felling shall be the complete removal of the tree, including the mechanical removal of the stump. In confined or restricted spaces, trees to be felled shall be dismantled.
- The Contractor shall produce his Insurance Policy covering such operations for inspection by the Contract Administrator.

116 TOPSOIL

- At the time of starting the subcontract work, the areas to be planted will be covered by either:
  Undisturbed topsoil prepared as necessary by others so that it is in a suitable state for the cultivation operations specified in this section, or
  Topsoil:
  300mm depth to woodland and thicket planted areas,
  300mm depth to shrub planted areas.
  Supplied and spread by others prior to commencement of the Soft Landscape Works.

117 SUITABILITY OF TOPSOILING

- Prior to starting the work the Contractor shall inspect areas to be planted to satisfy himself that after the specified preparation the topsoil will be suitable for planting.
- Commencement of planting will be taken as further acceptance by the Contractor as to the suitability of the topsoiling.

118 SOIL CONDITIONS

- Soil for cultivating and planting: Moist, friable and (except in aquatic/ marginal planting) not waterlogged.
- Frozen or snow covered soil: Give notice before planting. Provide additional root protection. Prevent planting pit sides and bases and backfill materials from freezing.

119 SETTING OUT OF WORKS

- The Contractor shall set out tree positions, specimen shrub positions and shrub areas in accordance with the soft landscape layout. Where not dimensioned on plan scaled dimensions may be used.
- Setting out shall be agreed with the Contract Administrator prior to planting.
- The Contract Administrator reserves the right to request minor adjustments to the setting out at no extra cost.
- Any planting carried out without the Contract Administrator's agreement of the setting out may have to be repositioned and no additional payment will be allowed

120 CLIMATIC CONDITIONS

- General: Carry out the work while soil and weather conditions are suitable.
  - Strong winds: Do not plant.

126 TIMES OF YEAR FOR PLANTING

- Carry out the work while soil and weather conditions are suitable for the relevant operations. Do not plant during periods of frost or strong winds. Plant during appropriate seasons which will be considered as follows:
- Deciduous trees and shrubs: Late October to late March.
- Conifers and evergreens: September/ October or April/ May.
- Herbaceous plants (including aquatic and marginal): September/ October or March/ April.
- Container grown plants: At any time if ground and weather conditions are favourable. Ensure that adequate watering and weed control is provided.

130 MECHANICAL TOOLS

- Restrictions: Do not use within 100 mm of tree and plant stems.

140 APPROVED CHEMICALS

- Use of chemicals shall comply with the Plant Protection Products (Sustainable Use) Regulations 2012 and Codes of Practice prepared jointly by the Department for Environment, Food and Rural Affairs (DEFRA), the Health and Safety Commission (HSC) and the National Assembly for Wales Environment, Planning and Countryside Department.
- All herbicides shall be on the current list of approved products. Storage, handling and application of chemicals shall be in accordance with the manufacturers instructions.
- The Contractor shall be responsible for any damage caused by spray drift and will make good at own expense.

145 WATERING

- Quantity: Wet full depth of topsoil.
- Application: Even and without damaging or displacing plants or soil.
- Frequency: As necessary to ensure establishment and continued thriving of planting.

150 WATER RESTRICTIONS

- General: If water supply is or is likely to be restricted by emergency legislation, do not carry out planting until instructed. If planting has been carried out, obtain instructions on watering.

151B WATER SUPPLY

- It is not known if a water supply will be available on the site and therefore the Landscape Contractor shall be responsible for making all necessary arrangements for providing water to the site or checking if an existing source is available.
- If required the Contractor shall provide all equipment necessary for watering the landscape areas and shall make all necessary arrangements with local water authority, tenant or landlord for use and payment.

160 NOTICE

- Give notice before:
  - Setting out.
  - Applying herbicide.
  - Applying fertilizer.
  - Delivery of plants/ trees.
  - Planting shrubs.
  - Planting trees into previously dug pits.
  - Watering.
  - Visiting site during maintenance period.
- Period of notice: One week.

200 PLANTS/ TREES - GENERAL

- Condition: Materially undamaged, sturdy, healthy and vigorous.
- Appearance: Of good shape and without elongated shoots.
- Hardiness: Grown in a suitable environment and hardened off.
- Health: Free from pests, diseases, discoloration, weeds and physiological disorders.
- Budded or grafted plants: Bottom worked.
- Root system and condition: Balanced with branch system.
  - Standard: The National Plant Specification.
- Species: True to name.
- Origin/ Provenance: As plant schedule.
  Definition: Origin and Provenance have the meaning given in the National Plant Specification.

215 PLANTS/ TREES - SPECIFICATION CRITERIA

- Name, forms, dimensions, provenance and other criteria: As scheduled and defined in the National Plant Specification (available on CS Design Software Limited's website).

221A SEMI MATURE TREES SUPPLY

- To BS 8545:2014, sizes and other criteria as scheduled.
- Trees are to be selected and tagged by the Contract Administrator in the presence of the Contractor.
- Contractor: Is to arrange for supply and delivery of trees as required and shall make all necessary allowance for offloading etc.
- Supplier: One or a combination of the following:
  - Deepdale Trees Limited, Tithe Farm, Hatley Road, Potton, Sandy, Bedfordshire, SG19 2DX. Tel: 01767 262636,
  - Hillier Nurseries Limited, Ampfield House, Ampfield, Romsey, Hanpshire, SO51 9PA. Tel: 01794 368733.

223 SEMI-MATURE TREES GENERALLY

- Semi-mature trees shall in general terms have a stem girth range of 20 to 75cm at one metre above ground level, overall height range of 6 to 15m and rootball diameter range of 0.8 to 2.5m.
- They are all at an advanced stage of growth and of such a size and weight that special lifting equipment and techniques are required when they are transplanted
- When several specimens of the same species are to be selected, evenness of shape and size will be required within the size range specified.

224 SEMI-MATURE TREES SPECIFICATION

- Refer to the Schedule of Work for exact tree specification (stem girth, height and spread, rootball diameter and depth, times transplanted on the nursery).
- Trees shall have a well-established fibrous root system within the confines of the rootball. Trees shall have a well-balanced canopy of branches. Only specimens which have a well defined, single central leader which is reasonably straight and upright will be accepted, unless a single straight leader is uncharacteristic of the habit of a particular species.
- Trees will be free from disease, defects and damage and will be in a healthy condition on arrival at the side. They shall be correctly top and root pruned.

235 CONTAINER GROWN PLANTS/ TREES

- Growing medium: With adequate nutrients for plants to thrive until permanently planted.
- Plants: Centred in containers, firmed and well watered.
- Root growth: Substantially filling containers, but not root bound, and in a condition conducive to successful transplanting.
- Hardiness: Grown in the open for at least two months before being supplied.
- Containers: With holes adequate for drainage when placed on any substrate commonly used under irrigation systems.

246 LABELLING AND INFORMATION

- Standard: To BS 3936.

251 SUPPLY OF PLANTS, APPROVED SUPPLIERS

- All trees, shrubs and transplants shall be obtained from the following approved suppliers unless stated otherwise:
  Extra Heavy Standard, feathered and Multistem Trees shall be obtained from:
  - Deepdale Trees Ltd., Stable Block, Hazel Hall Farm, Everton, Sandy, Bedford, SG19 2LU (Tel. No. 01767 262636);
  - Wyevale Nurseries Ltd., Kings Acre, Hereford, HR4 7AY (Tel. No. 01432 845200);
  - Hillier Nurseries (Winchester) Ltd., Ampfield House, Ampfield, Romsey, Hants. SO51 9PA (Tel. No.01794 368733)
  Shrubs, Hedging and Transplants shall be obtained from:
  Johnsons of Whixley Ltd., Whixley, York, Yorkshire, YO5 8AQ (Tel. No. 01423 330234) or Crowders Nurseries, Lincoln Road, Horncastle, Lincolnshire, LN9 5LZ (Tel. no. 01507 525000.
  Other requirements: Contractor is to provide notification of which supplier is to be used for all stock.

261 PLANT/TREE SUBSTITUTION

- Plants/ trees unobtainable or known to be likely to be unobtainable at time of ordering: Submit alternatives, stating:
  - Price.
  - Difference from specified plants/ trees.
- Further alternatives: Proposed substitutions may not be acceptable and submission of further alternatives may be required.
- Approval: Obtain before making any substitution.
- Any plant found during the maintenance/defects liability period to be of the wrong variety shall be replaced with the correct variety at the Contractor's expense.

265A PLANT HANDLING, STORAGE AND TRANSPORT

- Standard: To CPSE 'Handling and establishing landscape plants' (available to download from CS Design Software).
- Frost: Protect plants from frost.
- Handling: Handle plants with care. Protect from mechanical damage and do not subject to shock, e.g. by dropping from a vehicle.
- Plant packaging: Coextruded polyethylene bags with black interior and white exterior.
- Packaging of bulk quantities: Pallets or bins sealed with polyethylene and shrink wrapped.
- If plants suffer slight damage, they are to be carefully pruned. If major damage has occurred the plant shall be rejected and replaced at the Contractor's expense.
- After delivery, if planting is not carried out immediately, root balled shrubs should be placed cheek to cheek and the root ball covered with sand, peat or straw and watered to prevent drying out.
- Bare-rooted plants should be heeled-in by pacing the roots in a prepared trench and covering them with top-soil, which should be watered thoroughly to eliminate air pockets around the roots.
- The security and tidiness of the area set aside for heeling in shall be the responsibility of the Contractor. If planting is delayed for more than a week after delivery, packaged plants shall be unpacked, the bundles opened up and each groups of plants heeled-in separately and clearly labelled.
- Planting: Upright or well balanced with best side to front.

270 PLANTING GENERALLY

- Standard: To CPSE 'Handling and establishing landscape plants' (available to download from CS Design Software).
- Appearance: Plant upright or well balanced with best side to front.

280 TREATMENT OF TREE WOUNDS

- Cutting: Keep wounds as small as possible.
  - Cut cleanly back to sound wood using sharp, clean tools.
  - Leave branch collars. Do not cut flush with stem or trunk.
  - Set cuts so that water will not collect on cut area.
- Fungicide/ Sealant: Do not apply unless instructed.

290 SURPLUS MATERIAL

- Subsoil, stones, debris, wrapping material, canes, ties, temporary labelling, rubbish, prunings and other arisings: Remove.

PLANT CONTAINERS

PREPARATION OF PLANTING BEDS/ PLANTING MATERIALS

300 HERBICIDE TO CLEAR EXISTING VEGETATION

- Locations: All planting areas.
- Type: Suitable for supressing perennial weeds.
- Timing: Allow fallow period before cultivation.
  - Duration (minimum): As manufacturer's recommendation.

305 WEED CONTROL FOR INVASIVE NON-NATIVE WEEDS

- Locations: All planting areas.
- General: Prevent weeds from seeding and perennial weeds from becoming established, by contractor's choice of herbicide.

335 GENERAL FERTILIZER SLOW RELEASE
- Locations: All planting areas.
- Manufacturer: Contractor's choice.
  - Product reference: Contractor's choice.
- Application: Spread evenly.
  - Timing: Immediately before cultivation.
  - Rate: 30gms per m2.

341 PEAT
- Peat or products containing peat: Do not use.

357 SOIL AMELIORANT/ CONDITIONER FOR FLOWERING SHRUBS
- Locations: All planting areas as identified in the schedule of work.
- Type: Mushroom compost.
- Reference/ Description/ Grading: sample to be provided for approval.
- Application: Spread evenly.
  - Timing: Apply prior to cultivation.
  - Rate: 25-50 mm thick layer.

375 CULTIVATION
- Compacted topsoil: Break up to full depth.
- Cultivation: Loosen, aerate and break up soil into particles of 2-8 mm.
  - Depth: 300 mm.
  - Timing: Within a few days before planting.
  - Weather and ground conditions: Suitably dry.
- Surface: Leave regular and even.
- Levels: 1859-18-06 - Landscape Earthworks Plan.
- Undesirable material brought to the surface: Remove visible weeds, roots and large stones with any dimension exceeding 50 mm in any dimension.
- Soil within root spread of trees and shrubs to be retained: Do not dig or cultivate.

380 TOPSOIL
- During cultivation operations the Contractor shall take all precautions necessary to prevent topsoil becoming mixed with subsoil or any other deleterious material.

382 FINAL GRADING
- When topsoil is reasonably dry and workable it shall be graded to smooth, flowing contours, with falls, for adequate drainage, removing all minor hollows and ridges.

PLANTING SHRUBS

400 RANDOM PLANT LAYOUT TO SHRUB PLANTING
- Spacing: As drawing 1881-18-05+06 - Detailed Planting Plan.
- Density: As drawing 1881-18-05+06 - Detailed Planting Plan.

401 REGULAR PLANT LAYOUT TO THICKET PLANTING
- Spacing: As drawing 1881-18-04+05 - Detailed Planting Plan.
- Density: As drawing 1881-18-04+05 - Detailed Planting Plan.

402 PLANTING GENERALLY
- All plants shall be pit planted in accordance with BS 4428:1989 in existing topsoil concurrently with cultivation.

405 SHRUB PLANTING PITS

- Timing: Excavate 1-2 days (maximum) before planting.
- Sizes: 150 mm wider than roots when fully spread and 200 mm deep.
- Pit bottom improvement Break up to a depth of 150 mm, incorporating soil ameliorant/conditioner as clause 357.

407 PLANTING

- Before planting non-perishable containers shall be removed and badly damaged roots shall be carefully pruned.
- Plants shall be planted upright or well balanced with best side to the front. Topsoil shall be carefully returned to the planting pit, packing around evenly spread roots or root-ball and heeled firmly but gently in. The finished level shall be at the original soil mark on shrubs and 30mm above surrounding levels to allow for settlement.
- Shrubs which are not self-supporting shall be supported using sawn or riven timber stakes 1500mm long and not less than 25mm square in section pressure treated with non-injurious timber preservative to BS 4072. The stake shall be driven at least 600mm into the ground below the planting pit and shall be upright. Suitable Toms ties and spacers shall be used, positioned to suit the individual shrub. The stake will terminate some 75mm below the total height of the shrub and will be cut off neatly and square.

470 FORMAL HEDGES

- Shrubs for hedges: Consistent in species, cultivar and clone to ensure a uniform hedge.
- Planting: In trenches large enough to take full spread of roots. Set out plants evenly.

471 NATURALIZED HEDGES

- Planting: In trenches large enough to take full spread of roots. Set out plants evenly.

472 FENCING SUPPORT FOR NEW HEDGES

- Type: Timber post and 3 wire fence, refer to drawing 1881-18-11 for details.
- Timing: Before planting hedge.
- Support: Lightly secure hedge plants to fence wires at appropriate intervals.

475 BACKFILLING MATERIAL

- Composition: Previously prepared mixture of topsoil excavated from pit and additional topsoil as required.

476B SHRUB BACKFILLING MATERIAL

- Composition: Previously prepared mixture of topsoil excavated from pit and additional topsoil as required:
- Ameliorant/ Conditioner: Eco Tree and Shrub Compost supplied by Eco Sustainable Solutions Ltd, Chapel Lane, Parley, Christchurch, Dorset, BH23 6BG. Tel: 01202 593601) or similar approved.
  - Application rate: To suit soil report recommendations.
- Fertilizer: Slow release - ICL Enmag CRF or similar approved.
  - Application rate: To manufacturer's/ supplier's and soil report recommendations.

480A AFTER PLANTING

- Watering: Immediately after planting, thoroughly and without damaging or displacing plants or soil.
- Firming: Lightly firm soil around plants and fork and/ or rake soil, without damaging roots, to a fine tilth with gentle cambers and no hollows.

481 PRUNING AFTER PLANTING

- Upon completion of planting work, all plants shall be inspected for damage and pruning shall be carried out.
- The pruning shall be limited to the minimum necessary to remove dead or damaged twigs or branches or to compensate for the loss of roots and the results of transplanting operations.
- Pruning shall be carried out in such a manner so as not to change the natural habit or shape of the plant. All cuts shall be made flush leaving no stubs.

485A MULCHING PLANTING BEDS

- Material: Ornamental bark mulch as specified in the schedule of work.
  - Purity: Free of pests, disease, fungus and weeds.
- A sample load of the mulch to be used shall be provided for inspection and approval prior to spreading over planted areas.
- Preparation: Clear all weeds. Water soil thoroughly.
- Coverage: 50 mm depth.
- Mulch depth to be reduced as appropriate for areas of low ground cover/herbaceous planting - foliage of plants must not be covered with mulch.
- Finished level of mulch: 30 mm below adjacent grassed or paved areas.

PLANTING TREES

500 TREE PLANTING

- Standard: Prepare trees and transplant in accordance with BS 8545.

501 SEMI-MATURE TREE PLANTING

- The Contractor must satisfy himself as to the accessibility of tree planting locations and make allowances in his rates and prices accordingly. No claims by the Contractor will be allowed due to his ignorance of this aspect of the planting operation.
- The Contractor must take all reasonable precautions to prevent damage to roads, kerbs, footways, verges, etc., by Contractor's plant during delivery, unloading and planting operations. Any such damage will be made good at the Contractor's own expense.

502 ANTIDESICCANT FOR CONIFERS/ EVERGREENS

- Manufacturer: Contractor's choice.
  - Product reference: Contractor's choice.
- Application: Dip or thoroughly spray before delivering to site. Spray again soon after planting.
  - Do not apply in wet or frosty weather.
  - Ensure full coverage of underside of foliage.

505 TREE PITS

- Sizes: As shown on drawing ref:1881-18-02 - Earthworks Plan .
- Sloping ground: Maintain horizontal bases and vertical sides with no less than minimum depth throughout.
- Excavated material: Separate topsoil and subsoil material and stockpile for backfilling.
- Pit bottoms: Excavate with slightly raised centre: Break up base to a depth of 200 mm. Tree pits are to be tested for free drainage and if required positive drainage shall be installed.
  - Treatment: Gravel drainage layer if required as drawing ref:1881-18-02 - Earthworks Plan .
- Pit sides: Scarify.
- Backfilling material: Topsoil and subsoil material in accordance with drawing ref:1881-18-02 - Earthworks Plan.

507 SEMI-MATURE TREE PITS

- Tree pits shall be excavated immediately prior to planting of semi-mature trees.
- Size: Refer to drawing ref:1881-18-09 - Semi Mature Tree Pit Detail. The tree pits shall be at least 600mm diameter greater than the tree rootball.
- Pit bottoms: The bottom of each tree pit should be broken up to a depth of 300mm prior to tree planting.
- Pit sides: Scarify.
- Backfilling material: The tree pits to be backfilled with sufficient backfill material as specified in clause Q31/588 so that the original soil surface level on top of the rootball is flush with the surrounding soil surface. All in accordance with drawing ref: 1881-18-09 - Semi Mature Tree Pit Detail
- Watering system: Semi-mature trees shall have a watering/aeration system incorporated around their rootballs in accordance with the detail on drawing ref: 1881-18-09 - Semi Mature Tree Pit Detail and clause Q31/512
- Accessories: Tree pits are to be tested for free drainage and if required positive drainage shall be installed in accordance with the requirements of clause 515A.

509 PROTECTION OF SEMI-MATURE TREE PITS

- All excavated tree pits must be rendered safe whether close to public thoroughfares or not and must not be left open and unmarked.

512 TREE PIT IRRIGATION AND VENTILATION ACCESSORIES

- Locations: To all semi-mature trees.
- Manufacturer: GreenBlueUrban.
  - Product reference: 'Root Rain Urban'.
- Type: Perforated plastics irrigation pipe with inlet.
- Pipe diameter: 60 mm.
- Ring diameter: Contractor's choice.
- Inlet: Black plastics, with cap.
- Installation:
  - Pipe: Lay in loop above root ball with slight fall away from inlet pipe. Trim length to ensure a close fit in the tree pit. Connect both ends of pipe securely into plastics tee junction on inlet.
  - Top cap of inlet: Protruding slightly above finished surround level.
  - Backfill material: Carefully compact in layers.

515A TREE PIT DRAINAGE (IF REQUIRED)

- Locations: To tree pits adjacent to paved areas.
- Depth of excavation: Increase from specified size to allow for aggregate layer, with base slightly falling to outlet.
- Aggregate layer: Clean gravel or broken stone, with no fines, graded 40 to 20 mm.
  - Depth: 150 mm.
- Drainage pipes:
  - Type: Perforated plastics.
  - Diameter: 80 mm.
  - Position: Lay around perimeter of pit within aggregate layer.
  - Discharge: Connect to positive drainage.
- Geotextile filter:
  - Manufacturer: Submit proposals.
    Product reference: Submit proposals.
  - Position: Lay over aggregate before installing tree or backfill.
- Completed pits: Test for free drainage before planting.

526A UNDERGROUND GUYING FOR SEMI MATURE TREES.

- Drawing ref: 1881-18-09.
- Manufacturer: Platipus Anchors Ltd, Kingsfield Business Centre, Philanthropic Road, Redhill, Surrey, RH1 4DP, Tel: (01737) 762300.
  - Product reference: Platipus Anchor.
- Anchoring system: 3 no drive-in anchors.
- Installation: Ensure tree is positioned correctly and vertically prior to tightening guy line tensioners.

528 SEMI-MATURE TREE LIFTING AND DELIVERY

- Trees will be lifted and transplanted using an appropriate mechanical method.
- Trees delivered to site with rootballs which have become broken, or which have become unprotected during transit from drying out, pollution or exposure to frost will be rejected.
- The canopies of trees will be securely tied and protected from damage during transit. Trees which have been damaged during lifting and delivery so that the balanced shape of the canopy of branches, the leading shoot or a large area of bark is lost will be rejected. Any slight damage shall be carefully pruned in accordance with good arboricultural practice.
- The Contractor will be required to remove all rejected material from site and to replace this with semi-mature stock of equivalent quality to that originally selected in the nursery, at no extra cost.

529 PLANTING SEMI-MATURE TREES

- Trees are to be planted without delay following arrival on site. Branches shall be untied and the location of each individual tree shall be directed on site by the Contract Administrator, according to the shape of individual trees and groupings.
- The method of unloading and planting the trees must include the use of all necessary guards, protective padding, etc., to ensure that trees are not damaged by this operation.

531 WATERING OF SEMI-MATURE TREES

- Each tree shall be thoroughly watered in after planting. Any settlement of soil caused by the watering operation is to be made up with the addition of further backfill material.
- After watering a 75mm layer of bark mulch shall be spread around each trees to a 2000mm diameter

540A SINGLE ANGLED STAKING FOR MULTISTEM TREES

- Refer to detail on drawing ref: [1881-18-07]
- Staking:
  - Position: Close to tree position on windward or upslope side.
  - Tying position: Approximately one third of the height of the clear stem of the tree to be planted.
  - Driving: At an angle of 45° away from the tree position and at least 300 mm into bottom of pit before planting.
  - Backfilling: Consolidate material around stake.
  - Firming: Sufficiently firm to prevent movement of the rootball/ rootstock.
  - Excess length: Cut off 200 mm above tree support position.
- Ties: Toms stretch rubber belt (Ref: B1), 25mm wide and rubber spacer pad (Ref L3) between stake and tree or similar approved as shown on drawing ref:1881-18-07 as supplied by Toms Tree Ties, 7 Marley Farm Headcorn Road, Smarden, Ashford, Kent TN27 8PJ Tel: 01233 770066 or similar approved .
  - Number of ties: One tie within 50-100 mm of top of stake.
- Tying: Secure tree firmly but not rigidly to stake. Prevent tree from touching stake using spacer blocks or cushions if required.
- Nails: To BS 1202-1, galvanized, minimum 25 mm long and with 10 mm diameter heads.
- The position of the stake relative to the branches on trees shall be such that main stem or side branch contact will not occur. Minor branches may be cleanly cut off from the main stem to facilitate this.

550A SHORT DOUBLE STAKING FOR EXTRA HEAVY STANDARD TREES

- Refer to detail on drawing ref: 1881-18-06
- Staking:
  - Position: Either side of tree position and perpendicular to wind direction.
  - Driving: Vertically at least 300 mm into bottom of pit before planting.
  - Backfilling: Consolidate material around stake.
  - Firming: Sufficiently firm to prevent movement of the rootball/ rootstock.
- Height of stakes: Cut off to approximately 800 mm above ground level.
- Horizontal bracing: Rubber belting with spacers.
  - Fixing: Nailed to stake within 25 mm of top of stakes.
- Ties: Tree to be secured to rail with Toms expanding rubber belt Ref: B10 (37.5mm width) attached to Extra Large Pad Ref:L1 nailed to cross bar. Belt secured to rail with 2no. galvanised clout nails. Belt and pads as supplied by Toms Tree Ties, 7 Marley Farm Headcorn Road, Smarden, Ashford, Kent TN27 8PJ Tel: 01233 770066 or similar approved.
- Tying: Secure rubber belting around tree stem firmly without causing constriction or chafing.
- Nails for fixing ties, belts and webbing: To BS 1202-1, galvanized, minimum 25 mm long and with 10 mm diameter heads.
- Nails for fixing cross bars: 2no. galvanised nails (100mm x 4.5mm) per stake, nailed at opposing angles.

567 RABBIT PROTECTION TO TREES

- Refer to detail on drawing ref: [1881-18-10]
- Manufacturer: Acorn Planting Products (or similar approved).
  - Product reference: Spiral Guard..
- Type: Spiral.
- Material: HDPE.
- Size: 0.6 m high x 50 mm diameter or greater to suit girth of tree.
- Colour: Brown.
- Support: 900mm Bamboo Cane (300mm below ground level).
- General: Ensure that protection methods do not impede natural movement of trees or restrict growth.

586 TREE BACKFILLING MATERIAL

- Composition: Previously prepared mixture of topsoil excavated from pit and additional topsoil as required.
- Ameliorant/ Conditioner: Eco Tree and Shrub Compost supplied by Eco Sustainable Solutions Ltd, Chapel Lane, Parley, Christchurch, Dorset, BH23 6BG. Tel: 01202 593601) or similar approved.
  - Application rate: To manufacturer's/ supplier's recommendations.
- Fertilizer: ICL Enmag CRF, Slow release fertiliser or similar approved in accordance with manufacturer's recommendations.
  - Application rate: To suit soil report recommendations.

588 SEMI-MATURE TREE BACKFILLING MATERIAL

- Backfilling around the rootball should be carried out using the specified backfill material which should be consolidated by foot firming in 250mm layers.
- The backfill material for semi-mature tree pits shall consist of:
  25% Eco Tree and Shrub Compost supplied by Eco Sustainable Solutions Ltd, Chapel Lane, Parley, Christchurch, Dorset, BH23 6BG. Tel: 01202 593601) or similar approved.
  10% sharp sand,
  65% on site topsoil,
  300 gms of ICL Enmag CRF, Slow release fertiliser or similar approved in accordance with manufacturer's recommendations.
- The trees shall be supported in a vertical positions whilst backfilling takes place.
- At completion of the backfill operation any remaining topsoil shall under direction from the Contract Administrator, be evenly spread over the shrub beds.
- Any excavated material other than topsoil shall be removed off site to the Contractor's own tip.

589 WATERING

- Trees shall be watered thoroughly immediately after backfilling.

WOODLAND/ MATRIX/ BUFFER ZONE PLANTING

600 WOODLAND WORK GENERALLY

- Services: Check for below and above ground services, including land drainage, in the vicinity. Give notice if they may be affected and obtain instructions before proceeding.
- Safety: Comply with Arboriculture and Forestry Advisory Group Safety leaflets.

601 PRIOR TO PLANTING

- Plant material shall be immersed in Broadleaf Root Dip solution (or similar approved) to manufacturer's recommendations immediately prior to planting.

625A CULTIVATION

- General: Rotary cultivate to full depth of topsoil.
- Soil within root spread of trees to be retained: Do not plough or cultivate.

632 PIT PLANTING OF WHIPS AND TRANSPLANTS

- Excavate not more than 1day before planting and retain topsoil for re-use where specified.
- Sizes: Planting hole shall be 150mm wider than root spread and 200mm greater than the depth of the root system.
- Break up bottoms of tree pits to a depth of 150mm at planting
- Backfilling material: as clause Q31/475

680A SETTING OUT
- Planting density: 1 per m².
- Layout: Random groups of no less than 7 or more than 15 of the same species, ensuring that no three plants are aligned in any one direction.

685 RABBIT PROTECTION TO WHIPS AND TRANSPLANTS
- Refer to detail on drawing ref: [1881-18-10]
- Manufacturer: Amenity Land Solutions Ltd (or similar approved).
  - Product reference: Treeguard 710GUARD0715.
- Type: Plastic Mesh Tree Guard 0.6 x 50.
- Material: Polyethylene plastics mesh.
- Size: 0.6 m high x 200 mm diameter or greater to suit size of plants if particularly bushy.
- Colour: Brown.
- Support: Stake: 900x32x32mm (400mm below ground level). Mesh secured to stake using minimum of two plastic cable ties.
- General: Ensure that protection methods do not impede natural movement of trees or restrict growth.

PROTECTING/ MAINTAINING/ MAKING GOOD DEFECTS

PROTECTING/ MAINTAINING/ MAKING GOOD DEFECTS
The Contractor shall physically maintain the whole of the soft landscape works within the contract boundaries in accordance with the Contract Documentation. The period of maintenance will be twelve months following Practical Completion. REFER TO SECTION Q35 FOR DETAILS OF MAINTENANCE

705 MAINTENANCE WORKS
- Maintenance works to External Planting are specified in: Section Q35 and the schedule of works.
- The contractor should refer to this for all operations that are to be carried out during the specified maintenance period.

707 MAINTENANCE PRIOR TO PRACTICAL COMPLETION
- The Contractor shall physically maintain the planted areas prior to completion at his own expense unless otherwise agreed with the Contract Administrator.
- Maintenance shall include all of the works that are specified in section Q35 and the Schedule of Work to keep areas in an acceptable condition prior to be accepted for handover.
- The Contractor shall be responsible for any watering of planted areas prior to completion.

710A MAINTENANCE
- Duration: Carry out the operations in Section Q35 from completion of planting until the end of the rectification period.
- Frequency of maintenance visits: In accordance with the agreed maintenance schedule.

720 FAILURES OF PLANTING
- Defects due to materials or workmanship not in accordance with the Contract: Plants/ trees/ shrubs that have failed to thrive.
  - Exclusions: Theft or malicious damage after completion.
  - Rectification: Replace with equivalent plants/ trees/ shrubs.
- Replacements: To match size of adjacent or nearby plants of same species or match original specification, whichever is the greater.
- Timing of making good: During the next suitable planting season.

721 DEFECTS LIABILITY

- Any defects which appear within the Defects Liability Period and which are due to materials and workmanship not in accordance with the Contract Documentation shall be made good or replaced by the Contractor at his own cost.

723 MAKING GOOD DEFECTS

- The Contractor shall arrange a Making Good of Defects inspection with the Contract Administrator to take place immediately after the completion of these works.
- At the Making Good of Defects inspection, all areas shall be complete, in good order and in a tidy condition; grass shall be mown and edges edged; planted areas and areas at the base of trees shall be weed free, tidy and in a friable state.

725 FINAL INSPECTION

- Should the Contract Administrator deem further work is required under Defects Liability the Contractor shall be responsible for maintenance and defects liability until these works are completed and a Certificate of Making Good Defects issued.

740 CLEANLINESS

- Soil and arisings: Remove from hard surfaces and grassed areas.
- General: Leave the works in a clean tidy condition at completion and after any maintenance operations.

750 PLANTING MAINTENANCE GENERALLY

- Weed control: Maintain weed free area around each tree and shrub.
  - Diameter (minimum): The larger of 1 m or the surface of original planting pit.
  - Keep planting beds clear of weeds: By use of suitable herbicides.
- Planted areas: Fork over beds as necessary to keep soil loose, with gentle cambers and no hollows. Take care not to reduce depth or effect of mulch.
- Precautions: Ensure that trees and shrubs are not damaged by use of mowers, nylon filament rotary cutters and similar powered tools.
- Firming up: Gently firm loosened soil around trees/ shrubs. Straighten leaning trees/ shrubs.
- Trees: Spray crown when in leaf during warm weather.
  - Timing: After dusk.
- Tree accessories: Check condition of stakes, ties, guys, guards and irrigation and ventilation systems.
  - Broken or missing items: Replace.
  - Loose stakes: Re-firm in the ground or replace as necessary to provide support to the tree.
  - Loose guys: Re-firm anchor points and adjust as necessary to provide support to the tree.
  - Ties: Adjust to accommodate growth and prevent constriction or abrasion.
  - Damage to bark: Cut back neatly with sharp knife. Prevent further damage.
  - Frequency of checks: At each scheduled maintenance visit.
- Watering: As required for healthy establishment, depending on weather conditions.

760 PLANTING MAINTENANCE - PRUNING

- General: Prune to promote healthy growth and natural shape.
  - Dead, dying, diseased wood and suckers: Remove.
  - Timing: In accordance with the agreed maintenance schedule.
  - Trees: Favour a single central leading shoot.
- Arisings: Remove.

780 MAINTENANCE INSTRUCTIONS

- General: Before end of the maintenance period, submit printed instructions recommending procedures to be established by the Employer for maintenance of the planting work for one full year: Provide a schedule of any ongoing maintenance problems experienced during the rectification period.

Q35

MAINTENANCE

Q35 Landscape maintenance

To be read with Preliminaries/ General conditions.

GENERALLY

101 MAINTENANCE PERIOD
- The whole of the works are to be maintained for a period of Twelve months from the date of Practical Completion.

106 SCOPE OF MAINTENANCE
- Maintenance shall include all operations to keep the works in good order and in tidy condition until areas are inspected, authorised and handed over.
- The number of maintenance visits and operations will be as stated in the Schedule of Work but must be sufficient to ensure that all of the specified operations are carried out.
- Allow for a minimum of 21 maintenance visits during the twelve month period. A visit be defined as the period of time required by the Contractor to carry out all of the maintenance items specified in the Schedule of Work and below.

110 NOTICE
- Give notice before:
  - Application of herbicide.
  - Application of fertilizer.
  - Watering.
  - Each site maintenance visit.
- Period of notice: 7 days.

130 REINSTATEMENT
- Damage or disturbance to soil structure, planting, grass, fencing, hard landscaping, structures or buildings: Reinstate to original condition.

155 WATERING
- Supply: to be confirmed.
- Quantity: Wet full depth of topsoil .
- Application: Do not damage or loosen plants.
- Compacted soil: Loosen or scoop out, to direct water to rootzone.
- Frequency: As necessary for the continued thriving of all planting.

160 WATER RESTRICTIONS
- General: If water supply is, or is likely to be, restricted by emergency legislation, submit proposals for an alternative suitable source of water. Obtain instructions before proceeding.

170 DISPOSAL OF ARISINGS
- General: Unless specified otherwise, dispose of arisings as follows:
  - Biodegradable arisings: Remove to recycling facility.
  - Grass cuttings: Remove to recycling facility.
  - Tree roots and stumps: Remove from site.
  - Shrub and tree prunings: Remove to recycling facility.
  - Litter and nonbiodegradable arisings: Remove from site.

180 CHIPPING OR SHREDDING
- General: Not permitted on site.

190 LITTER
- Extraneous rubbish not arising from the contract work: Collect and remove from site.

195 PROTECTION OF EXISTING GRASS
- General: Protect areas affected by maintenance operations using boards/tarpaulins. Do not place excavated or imported materials directly on grass.

197 CLEANLINESS
- Soil and arisings: Remove from hard surfaces.
- General: Leave the works in a clean, tidy condition at completion and after any maintenance operations.

GRASSED AREAS

210A MAINTENANCE OF GRASSED AREAS
- General: Maintain turf in a manner appropriate to the intended use.
- Soil and grass:
  - Condition: Maintain a healthy vigorous sward, free from disease, fungal growth, discolouration, scorch or wilt.
  - Waterlogging and compaction: Prevent.
  - Damage: Repair trampling, abrasion or scalping.
- Ornamental lawns: Maintain reasonably free from moss, excessive thatch, weeds, frost heave, worm casts and mole hills.
  - Edges: Neat and well defined, in clean straight lines or smooth flowing curves.
- Litter and fallen leaves: Remove regularly to maintain a neat appearance.
- Keep the grass sward substantially free of broad leaved weed as instructed by the Contract Administrator, by applying suitable selective herbicides. No herbicide application shall occur in areas designated for wild flora.
- Apply fertiliser to grass sward during spring and autumn, in accordance with the requirements stated in the schedule of work.
- Apply moss killer to grass sward, as instructed by the Contract Administrator.

220 GRASS CUTTING GENERALLY
- Before mowing: Remove litter, rubbish and debris.
- Finish: Neat and even, without surface rutting, compaction or damage to grass.
- Edges: Leave neat and well defined. Neatly trim around obstructions.
- Adjoining hard areas: Sweep clear and remove arisings.
- Drought or wet conditions: Obtain instructions.

225 TREE STEMS
- Precautions: Do not use mowing machinery closer than 100 mm to tree stems. Use nylon filament rotary cutters and other hand held mechanical tools carefully to avoid damage to bark.

250 LEAF REMOVAL
- Operations: Collect fallen leaves.
- Special requirements: None.
- Disposal: Remove from site for recycling.

255 FIRST CUT OF GRASSED AREAS
- Height of initial growth: 75+mm.
- Preparation:
  - Debris and litter: Remove.
  - Stones and earth clods larger than 25 mm in any dimension: Remove
- Height of first cut: 50mm.
- Mower type: Contractor's choice.
- Arisings: Remove.

265A MOWING GENERAL AREAS
- Refer to schedule of work.
- Grass height: Maintain above 200mm.
- Arisings: Remove.

270A MOWING WILDFLOWER MEADOW GRASSED AREAS
- Refer to schedule of work.
- Grass height: Maintain above 75mm.
- Arisings: Remove excessive arisings.

309 EDGES TO SEEDED AREAS
- Location: Planting beds and around newly planted trees.
- Timing: After seeded areas are well established.
- Edges: Cut to clean straight lines or smooth curves. Draw back soil to permit edging.
- Arisings: Remove.

330A SELECTIVE HERBICIDE
- Location: Spot apply all grassed areas.
- Herbicide: Contractor's choice.

350 FERTILIZER - SPRING APPLICATION
- Type: Scotts spring/summer lawn fertiliser 9+7+7 or similar approved.
- Application rate: as manufacturer's recommendations.

381A REINSTATEMENT OF WORN OR DAMAGED LAWNS
- Worn or damaged areas: Make good by reseeding:
  - Reseeding standard: To BS 7370-3, Clause 12.6.
- Seed: To match existing in appearance and quality.
- Protection and watering: Provide as necessary to promote successful germination and/ or establishment.

SHRUBS/TREES/HEDGES

500 ESTABLISHMENT OF NEW PLANTING
- Duration: One year.
- Weed control:
  - Method: Keep planting beds clear of weeds by handweeding unless otherwise stated. Spot treatment of perennial weed with herbicide is only to be used where approved by the Contract Administrator.
  - Area: Maintain a weed free area around each tree and shrub, minimum diameter the larger of 1 m or the surface of the original planting pit.
- Soil condition: Fork over beds to keep soil loose, with gentle cambers and no hollows. Do not reduce depth or effect of mulch.
- Watering: Contractor's choice to maintain healthy growth.

502 ESTABLISHMENT OF NEW PLANTING - FERTILIZER
- Time of year: March or April.
- Type: Slow release Enmag CRF or similar approved.
- Spreading: Spread evenly. Carefully lift and replace any mulch materials.
  - Application rate: As manufacturer's recommendations.

510 TREE STAKES AND TIES
- Inspection/ Maintenance times: At each maintenance visit and immediately after strong winds.
- Stakes:
  - Replace loose, broken or decayed stakes to original specification.
  - If longer than half of clear tree stem height, cut to this height in spring. Retie to tree firmly but not tightly with a single tie.
- Ties: Adjust, refix or replace loose or defective ties, allowing for growth and to prevent chafing.
  - Where chafing has occurred, reposition or replace ties to prevent further chafing.
- Removal of stakes and ties: only when instructed when trees are sufficiently established.
  - Fill stake holes with lightly compacted soil.

515 TREE GUY WIRES
- Inspection/ Maintenance times: At each maintenance visit and immediately after strong winds.
- Operations:
  - Replace or resecure loose or missing guy wires.
  - Adjust to suit stem growth and to provide correct and uniform tension.
- Removal: only when instructed when trees are sufficiently established.

520 REFIRMING OF TREES AND SHRUBS
- Timing: After strong winds, frost heave and other disturbances.
- Refirming: Tread around the base until firmly bedded.
- Collars in soil at base of tree stems, created by tree movement: Break up by fork, avoiding damage to roots. Backfill with topsoil and refirm.

525 TREE GUARDS
- Loose or defective guards: Adjust, refix or replace to original specification and to prevent chafing.

540 PRUNING GENERALLY
- Pruning: In accordance with good horticultural and arboricultural practice.
  - Removing branches: Do not damage or tear the stem or bark.
  - Wounds: Keep as small as possible and cut cleanly back to sound wood.
  - Cutting: Make cuts above and sloping away from an outward facing healthy bud, angled so that water will not collect on cut area.
  - Larger branches: Prune neither flush nor leaving a stub, but using the branch bark ridge or branch collar as a pruning guide.
- Appearance: Thin, trim and shape each specimen appropriately to species, location, season, and stage of growth, leaving a well balanced natural appearance.
- Tools: Use clean sharp secateurs, hand saws or other approved tools. Trim off ragged edges of bark or wood with a sharp knife.
- Disease or infection: Give notice if detected.
- Growth retardants, fungicide or pruning sealant: Do not use unless instructed.

555 PRUNING TREES AND SHRUBS
- Standard: To BS 7370-4.
- Special requirements: None.

575 PRUNING ORNAMENTAL SHRUBS
- General: Prune to encourage healthy and bushy growth and desirable ornamental features, e.g. flowers, fruit, autumn colour, stem colour.
- Suckers: Remove by cutting back level with the source stem or root.

620 REMOVAL OF DEAD PLANT MATERIAL
- Operations: At the end of the growing season, check all shrubs and remove all dead foliage, dead wood, and broken or damaged branches and stems.

630 DEAD AND DISEASED PLANTS
- Removal: Within one week of notification.
- Replacement: In the next suitable planting season.

635 REINSTATEMENT OF SHRUB/ HERBACEOUS AREAS
- Dead and damaged plants: Remove.
- Mulch/ matting materials:
  - Carefully move to one side and dig over the soil, leaving it fit for replanting.
- - Do not disturb roots of adjacent plants.
- Replacement plants:
  - Use pits and plants: To original specification or to match the size of adjacent or nearby plants of the same species, whichever is the greater.
  - Additional requirements: Obtain approval from Contract Administrator of alternatives if original species are unavailable. Proposed substitutions may not be acceptable and submission of further alternatives may be required.
- Dressing: Slow release fertilizer:
  - Type: Enmag CRF or similar approved.
  - Application rate: As manufacturer's recommendations.

645 WEED CONTROL GENERALLY
- Weed tolerance: At all times, weed cover less than 5% and no weed to exceed 100 mm high.
- Adjacent plants, trees and grass: Do not damage.

650 HAND WEEDING
- General: Remove weeds entirely, including roots.
- Disturbance: Remove the minimum quantity of soil, and disturb plants, bulbs and mulched surfaces as little as possible.
- Completion: Rake area to a neat, clean condition.
- Mulch: Reinstate to original depth.

657 HERBICIDE TO KILL REGROWTH
- Type: Suitable foliar acting herbicide to kill regrowth.
- Timing: Allow recommended period for herbicide to take effect before clearing dead weeds.

685 SOIL LEVEL ADJUSTMENT
- Level of soil/mulch at edges of beds: Reduce to 50 mm below adjacent grass or hard surface.
  - Arisings (if any): Spread evenly over the bed.

690 MAINTENANCE OF LOOSE MULCH
- Thickness (minimum): 50 mm.
  - Top up: Annually where specified in schedule of work.
- Mulch spill on adjacent areas: Remove weeds and rubbish and return to planted area.
- Weeding: Remove weeds growing on or in mulch by hand weeding.

700 SNOW REMOVAL FROM SHRUBS/ TREES

- Standard: To BS 7370-4.
- Plants subject to snow removal: All evergreens.
- Timing: Within 24 hours of snowfall.

820 PREVENTION OF WOUND BLEEDING

- Standard: To BS 3998.

825 PREVENTION OF DISEASE TRANSMISSION

- Standard: To BS 3998.

SECTION 3

SCHEDULE OF WORK

Item	Description	Quantity	Unit	Unit Cost £	Total Cost £
	GROUND PREPARATION & SEEDING				
	GENERAL NOTE				
	The areas stated are measured on plan. The contractor's prices are deemed to include any additional labour/ materials necessary to accommodate the contours of the site.				
	A Ornamental Planting **1779**m² **B** Ornamental Hedge **257**lin/m² **C** Ornamental Hedge - Low Clipped **228**lin/m² **D** Native Hedgerow - Double row **330**lin/m² **E** Native Hedgerow - Triple row **359**lin/m² **F** Woodland edge planting (1m grid) **545**m² **G** Grass Seed areas - Close mown **265**m² **H** Meadow Seeded areas **1773**m²				
a	PROVISIONAL Clear all areas to be seeded or planted of all weed growth, including roots and rhizomes, by application of herbicide or by hand to be approved by the Landscape Architect. All arising to be collected and removed from site. (**A, B, C, D, E, F, G, H**)	5,536	m²		
b	Cultivate areas to be planted to a depth of 300mm in accordance with the specification. (**A, B, C, D, E, F**)	3,498	m²		
c	Cultivate areas to be seeded to a depth of 100mm in accordance with the specification. (**G,H**)	2,038	m²		
d	Carry out minor grading of all areas to be seeded or planted, bringing the soil to an even grade, free from minor hollows and ridges at correct finished levels. (**A, B, C, D, E, F, G, H**)	5,536	m²		
e	Supply, spread and incorporate at time of cultivation a 50mm depth of spent mushroom compost to all ornamental planted areas. (**A, B, C**)	2,264	m²		
f	Lightly and uniformly reduce to a fine tilth 25mm deep, areas to be grass or meadow seeded by harrowing and raking. Remove stones over 30mm in any dimension. (**G, H**)	2,038	m²		
g	Supply and spread Pro Fert1 Pre-seeder fertilizer (6:9:6) as supplied by DLF Seeds Ltd or similar approved at a rate of 35-70gms/m^2 in accordance with the manufacturer's recommendations, to all seeded areas. (**G**)	265	m²		
h	Supply and sow DLF Seeds Ltd grass seed mixture Promaster PM 125 Clearsky Mix at a rate of 20g/m^2 (**G**)	265	m²		
	Carried forward			**£**	

Item	Description	Quantity	Unit	Unit Cost £	Total Cost £
	GROUND PREPARATION & SEEDING				
	Brought forward from previous page			**£**	
a	Supply and sow Emorsgate EM4 meadow mixture at a rate of 4g/m^2 in accordance with manufacturer's recommendations. (**H**)	1,773	m²		
b	Carry out initial cut of seeded areas when grass is 50-75mm high. Cut to 50mm. (**G**)	265	m²		
c	Carry out initial cut to meadow seeded areas when grass is 75mm or above. Timing and height of cut to be as recommended by seed supplier dependent on establishment. (**H**)	1,773	m²		
	Ground preparation & Seeding to Schedule of Works Summary			**£**	

Item	Description	Quantity	Unit	Unit Cost £	Total Cost £
	FENCING & RABBIT PROTECTION				
	Supply and fix to hedging and transplants, 600mm x 200mm diameter Plant Care Treeguard Mesh No. 5. To be secured with galvanised staples to supporting 32mm square sawn timber stakes to be 90cm long in accordance with manufacturer's recommendations. Shelter colour to be brown.				
a	Woodland Edge	517	no.		
b	Native Hedging	4,961	no.		
c	Supply and fix to trees 600mm x 50mm diameter (or greater dependent on tree girth) Acorn Planting Product HDPE Spiral Guard supported by 900mm long bamboo cane. Guard colour to be brown.	133	no.		
d	Supply and erect a post and 3-wire fence 900mm height in accordance with drawing no: 1881-18-11.	55	lin.m.		
	Fencing & Rabbit Protection to Schedule of Works Summary			**£**	

Item	Description	Quantity	Unit	Unit Cost £	Total Cost £
	SEMI MATURE TREE PLANTING				
	Supply and plant the following semi-mature trees, including pit excavation, underground guying, installation of watering system, backfill material and watering, all in accordance with the specification.				
	Circumference of stem at 1m above ground level				
	20-25cm stem girth 6.0-7.0m height 2.1m clear stem Rootballed				
a	Liquidamber styraciflua	10	no.		
	Semi Mature Tree Planting to Schedule of Works Summary			£	

Item	Description	Quantity	Unit	Unit Cost £	Total Cost £
	TREE PLANTING				
	Supply and plant the following trees including backfill material, immersion of open ground roots in Broadleaf root dip, staking and tying, all in accordance with the Specification.				
	All trees to have a central leader.				
	Circumference of stem at one metre above ground level indicated in centimetres.				
	Extra Heavy Standard				
	18-20cm girth				
	4.5-6.5m height				
	1.8-2.1m clear stem				
	Double staked				
	rootballed				
a	Carpinus betulus 'Lucas'	36	no.		
	Extra Heavy Standard				
	14-16cm girth				
	4.25-5.5m height				
	1.8-2.1m clear stem				
	Double staked				
	rootballed				
b	Acer campestre	5	no.		
c	Alnus glutinosa	4	no.		
d	Prunus padus	7	no.		
e	Tillia cordata 'Greenspire'	43	no.		
	Multi Stemmed Trees				
	3.5-4.0m height				
	angle staked				
	rootballed				
f	Betula utilis jacquemontii	1	no.		
	Feathered Trees				
	1.8-2.1m height				
	well furnished with lateral shoots to the base				
	single staked				
	bare rooted				
g	Acer campestre	11	no.		
h	Corylus avellana	17	no.		
				£	
	Tree Planting to Schedule of Works Summary				

Item	Description		Quantity	Unit	Unit Cost £	Total Cost £
	SHRUB & HERBACEOUS PLANTING					
	Supply and plant the following plant material including the incorporation of compost and fertilizer with backfill as specified. Roots of open ground plants shall be immersed in Broadleaf root dip prior to planting. The planted area shall be cultivated and brought to a tidy condition at planting. Plant material which is not self-supported shall be staked in accordance with the Specification. Height or Spread indicated in mm. OG = open ground plants. (P) = prune at planting in accordance with instructions from the Landscape Architect (S) = Specimen Shrubs					
		Min Pot Vol (Litres) or Open Ground noted				
a	Amelancier canadensis (S)	900-1200mm 15L	6	no.		
b	Choisya 'Aztec Pearl'	300-400mm 3L	620	no.		
c	Euonymus fortunei 'Emerald Gaiety'	200-300mm 3L	885	no.		
d	Genista lydia	300-400mm 3L	30	no.		
e	Hebe 'Oratia Beauty'	300-400mm 3L	668	no.		
f	Hebe pinguifolia 'Sutherlandii'	200-300mm 3L	388	no.		
g	Lavandula angustifolia 'Hidcote'	200-300mm 3L	210	no.		
h	Lonicera pileata	300-400mm 2L	1016	no.		
i	Luzula sylvatica	Clump 2L	130	no.		
j	Miscanthus sinensis 'Ferner Osten' (S)	Clump 7.5L	8	no.		
k	Pachysandra terminalis	150-200mm 2L	320	no.		
l	Persicaria affinis 'Darjeeling Red'	Clump 2L	432	no.		
m	Photinia fraseri 'Red Robin'	400-600mm 3L	224	no.		
n	Philadelphus 'Belle Etoile'	400-600mm 3L	59	no.		
o	Potentilla fruticosa 'Elizabeth'	200-300mm 3L	284	no.		
	Carried forward				£	

Item	Description		Quantity	Unit	Unit Cost £	Total Cost £
	SHRUB & HERBACEOUS PLANTING					
	Brought forward from previous page					
a	Rosa Kent	300-400mm 3L	520	no.		
b	Rosmarinus officinalis	300-400mm 2L	190	no.		
c	Spirea nipponica 'Snowmound'	400-600mm 3L	62	no.		
	ORNAMENTAL HEDGE PLANTING					
	Supply and plant ornamental hedging species to layouts as specified on drawing: 1881-18-05					
d	Escallonia 'Donard Seedling'	400-600mm 3L	1143	no.		
	LOW CLIPPED ORNAMENTAL HEDGE PLANTING					
	Supply and plant ornamental hedging species to layouts as specified on drawing: 1881-18-05					
e	Lonicera nitida	300-400mm 2L	1522	no.		
	BARK MULCH (A,B,C, Includes native hedges along frontage)					
f	Supply and spread a 50mm thick layer of Contract ornamental 5-35mm bark mulch supplied by Amenity & Horticultural Services, Coppards Lane, Northiam, East Sussex, TN31 6QP. Bark to be thoroughly watered down at spreading		2531	m²		
					£	
	Shrub & Herbaceous Planting to Schedule of Works Summary					

Item	Description		Quantity	Unit	Unit Cost £	Total Cost £
	NATIVE TRANSPLANT & HEDGE PLANTING					
	Supply and plant the following plant material including the incorporation of compost and fertilizer with backfill as specified. Roots of open ground plants shall be immersed in Broadleaf root dip prior to planting. The planted area shall be cultivated and brought to a tidy condition at planting.					
	Plant material which is not self-supported shall be staked in accordance with the Specification					
	Height or Spread indicated in mm.					
	OG = open ground plants. (P) = prune at planting in accordance with instructions from the Landscape Architect					
	WOODLAND EDGE PLANTING (F)					
		Min Pot Vol (Litres) or Open Ground noted				
a	Acer campestre	400-600mm 1+1 OG	17	no.		
b	Corylus avellana (P)	400-600mm 1+1 OG	95	no.		
c	Crataegus monogyna (P)	400-600mm 1+1 OG	144	no.		
d	Ilex aquifolium	400-600mm 2L	26	no.		
e	Lonicera pericyclamen	300-400mm 2L	11	no.		
f	Rosa arvensis (P)	300-400mm 2L	11	no.		
g	Rosa canina (P)	300-400mm 2L	17	no.		
h	Prunus spinosa (P)	600-800mm 1+1 OG	81	no.		
i	Sambucus nigra (P)	600-800mm 1+1 OG	17	no.		
j	Salix caprea (P)	600-800mm 1+0 OG	55	no.		
k	Salix cinerea (P)	600-800mm 1+0 OG	17	no.		
l	Viburnum opulus (P)	600-800mm 1+1 OG	26	no.		
	Carried forward				£	

Item	Description		Quantity	Unit	Unit Cost £	Total Cost £
	NATIVE TRANSPLANT & HEDGE PLANTING					
	Brought forward from previous page				£	
	NATIVE HEDGE PLANTING (D,E)					
a	Acer campestre	600-800mm 1+1 OG	348	no.		
b	Corylus avellana (P)	600-800mm 1+1 OG	397	no.		
c	Crataegus monogyna (P)	600-800mm 1+1 OG	2483	no.		
d	Ilex aquifolium	400-600mm 2L	249	no.		
e	Lonicera pericyclamen	300-400mm 2L	99	no.		
f	Prunus spinosa (P)	600-800mm 1+1 OG	989	no.		
g	Rosa arvensis (P)	300-400mm 2L	99	no.		
h	Rosa canina (P)	300-400mm 2L	99	no.		
i	Salix caprea (P)	600-800mm 1+0 OG	99	no.		
j	Salix cinerea (P)	600-800mm 1+0 OG	99	no.		
	Native Transplant & Hedge Planting to Schedule of Works Summary				£	

Item	Description	Quantity	Unit	Unit Cost £	Total Cost £
	MAINTENANCE				
	During the twelve month period after Practical completion.				
	Note: Allow for twenty-two maintenance visits (18 during the growing season, 4 during the dormant season). A visit shall be defined as the period of time required by the Contractor to carry out all maintenance items specified in the Schedule of work below.				
	The Civil Aviation Authority's 'CAP 772 Birdstrike Risk Management for Aerodromes', Part 2.6 'Aerodrome Grass Management', Part 2.7 'Optimising a Standard Long Grass Policy Maintenance Regime' and Part 4.4 'Landscaping' have been consulted with regards to maintenance of general landscape areas. Also 'CAP 772 Wildlife Hazard Management at Aerodromes' chapters 4 and 5.				
	GENERAL (A,B,C,D,E,F,G,H)				
a	Tidy up areas removing rubbish, litter, etc., from planted and grassed areas. Repeat at each maintenance visit.		Item		
b	Check that the plant material is firmly planted and firm in where required. Six times		Item (x6)		
c	Treat pests and diseases as necessary by agreement with the Contract Administrator.		Item		
d	Prune thicket and hedge transplants/ shrubs as necessary to avoid conflict with footpaths, grass mowing, etc.		Item		
e	Water all plant material as necessary to maintain healthy growth.		Item		
f	Dead, dying or diseased wood to be pruned out of plant material.		Item		
	TREE PLANTING				
g	To semi mature, extra heavy standard and multistem trees: Check, adjust and replace underground guys, stakes and ties as necessary. Prune dead and damaged wood.		Item		
h	Check shelter guards and refirm/ replace when required. Four times		Item (x4)		
	Carried forward			£	

Item	Description	Quantity	Unit	Unit Cost £	Total Cost £
	MAINTENANCE				
	Brought forward from previous page			£	
	WOODLAND EDGE PLANTING (F)				
a	Keep areas clear of weed growth by spot herbicide treatment as appropriate from mid-April to late September. Four times		m² (x4)		
b	Check shelter guards and re-firm/ replace when required. Remove weed growth from within. Four times		Item (x4)		
	INDIGENOUS HEDGEROW (E,F)				
c	Keep areas clear of growth by hand weeding and spot herbicide treatment as appropriate from mid-April to late September. Four times	689	m² (x4)		
d	Check shelter/ spiral guards and re-firm/ replace when required. Remove weed growth from within. Four times		Item (x4)		
	ORNAMENTAL SHRUB PLANTED AREAS (A)				
e	Water ornamental shrub beds as necessary to maintain healthy growth.		Item		
f	Prune shrubs as required to achieve desired form and prevent invasive species smothering less aggressive species.		Item		
g	Prune dead, dying or diseased wood from plant material.		Item		
h	Keep shrub areas clear of weed growth by hand weeding and spot herbicide treatment as appropriate. Twelve times	1779	m² (x12)		
i	Apply a slow release fertilizer, Enmag CRF or similar approved, composition NPK 11 + 22 + 9 + 6.0% Mg, to shrub areas at a rate of 30 gms / m². Once only (timing to be agreed with Contract Administrator)	1779	m²		
j	Edge up planted areas to maintain soil level 25mm below adjacent hard surfaces and kerbs. Any soil washed onto hard surfaces to be cleaned off. Repeat at each maintenance visit.		Item		
	Carried forward			£	

Item	Description	Quantity	Unit	Unit Cost £	Total Cost £
	MAINTENANCE				
	Brought forward from previous page			£	
	ORNAMENTAL SHRUB PLANTED AREAS (A) cont.				
a	Lightly cultivate all shrub beds, breaking up soil evenly. Once only. Timing to be agreed with the Contract administrator	1779	m²		
	ORNAMENTAL HEDGEROW (B)				
b	Keep areas clear of growth by hand weeding and spot herbicide treatment as appropriate. Twelve times	257	Lin.m		
c	Prune hedge as necessary to maintain desired height of 1000mm and width of 1000mm	257	Lin.m		
	ORNAMENTAL HEDGEROW (LOW CLIPPED)				
d	Keep areas clear of growth by hand weeding and spot herbicide treatment as appropriate. Twelve times	228	Lin.m		
e	Prune hedge as necessary to maintain desired height of 500mm and width of 500mm	228	Lin.m		
	MAINTENANCE TO MOWN & REINFORCED GRASS AREAS (DLF Seeds Ltd PM125 Clearsky) (G) The requirements in the first year are to control and reduce competition from weeds. Due to the requirement to reduce the risk posed by birds, there will be a long grass regime for all grass areas to avoid potential grazing by wildfowl. Therefore grass should not be cut below 200mm in height at any time, except for the first establishment cut,				
	<u>Mid-March/ April</u>				
f	First establishment cut to 50mm or when grass exceeds this height	265	m^2		
	<u>May-August</u>				
g	Two grass cuts to 200mm	265	m² (x2)		
	(PROVISIONAL)				
	<u>Mid-March to late May</u>				
h	Supply and spot apply herbicide to pernicious weeds in accordance with manufacturer's recommendations.	265	m^2		
	Carried forward			£	

Item	Description	Quantity	Unit	Unit Cost £	Total Cost £
	MAINTENANCE				
	Brought forward from previous page			**£**	
	MAINTENANCE TO MOWN & REINFORCED GRASS AREAS (DLF Seeds Ltd PM125 Clearsky) (G) cont.				
	(PROVISIONAL)				
a	Supply and spread Scotts autumn lawn fertilizer (4-12-12) at a rate of 70gms/ m² during early October to 'Mown Grass Areas' sown with DLF Seeds Ltd. PM 125 Clearsky Mix only.				
	Final cut September/ October				
b	One grass cut to 200mm in height or when grass exceeds this height.	265	m²		
c	Where 'mown grass areas' are adjacent to planted areas; Shape grass edge with half-moon spade. Twice only		Item (x2)		
	Note: Contractor shall confirm timing and height of proposed cutting before undertaking any works. At each cut, arisings shall be removed from site.				
	MAINTENANCE TO MEADOW SEEDED AREAS (Emorsgate EM4) (H)				
d	Mid-late July one cut down to 75mm	1773	m²		
e	Mid-March - April One cut down to 75mm	1773	m²		
f	Mid-late October One cut down to 75mm	1773	m²		
g	(PROVISIONAL) Supply and spot apply herbicide to pernicious weeds in accordance with manufacturer's recommendations.	1773	m²		
	Note: Contractor shall confirm timing and height of proposed cutting before undertaking any works. At each cut, arisings shall be removed off site.				
	Initial 12months maintenance to schedule of works summary			**£**	

	SCHEDULE OF WORK SUMMARY	**Section/ Total Pages**	**Total Cost £**
a	GROUND PREPARATION AND SEEDING	3/ 2	
b	FENCING AND RABBIT PROTECTION	3/ 3	
c	SEMI MATURE TREE PLANTING	3/ 4	
d	TREE PLANTING	3/ 5	
e	SHRUB AND HERBACEOUS PLANTING	3/ 7	
f	NATIVE TRANSPLANT AND HEDGE PLANTING	3/ 9	
g	MAINTENANCE	3/ 13	
	Sub total	**£**	
	Barry Chinn Associates supervision fee to include:	**£**	**£5,500.00**
	Minor drawing amendments and 'As builts'. Attend site during intillation of earthworks and planting (5no. Visits). PC inspection with report. Defects inspection (2no. Visits).		
	SECTION 3 **SCHEDULE OF WORKS TO GENERAL SUMMARY**	**£**	

SECTION 4

GENERAL SUMMARY

SUMMARY

SECTION 1 : PRELIMINARIES **1/1**

SECTION 3 : SCHEDULE OF WORK **3/14**

SECTION 4 TO FORM OF TENDER **£**

Contractor's Signature .

Name .

Address .

.

Date .

.

APPENDIX A

EARTHWORKS SPECIFICATION
(for reference only)

APPENDIX B

DRAWINGS

COPYRIGHT RESERVED
DO NOT SCALE FROM THIS DRAWING

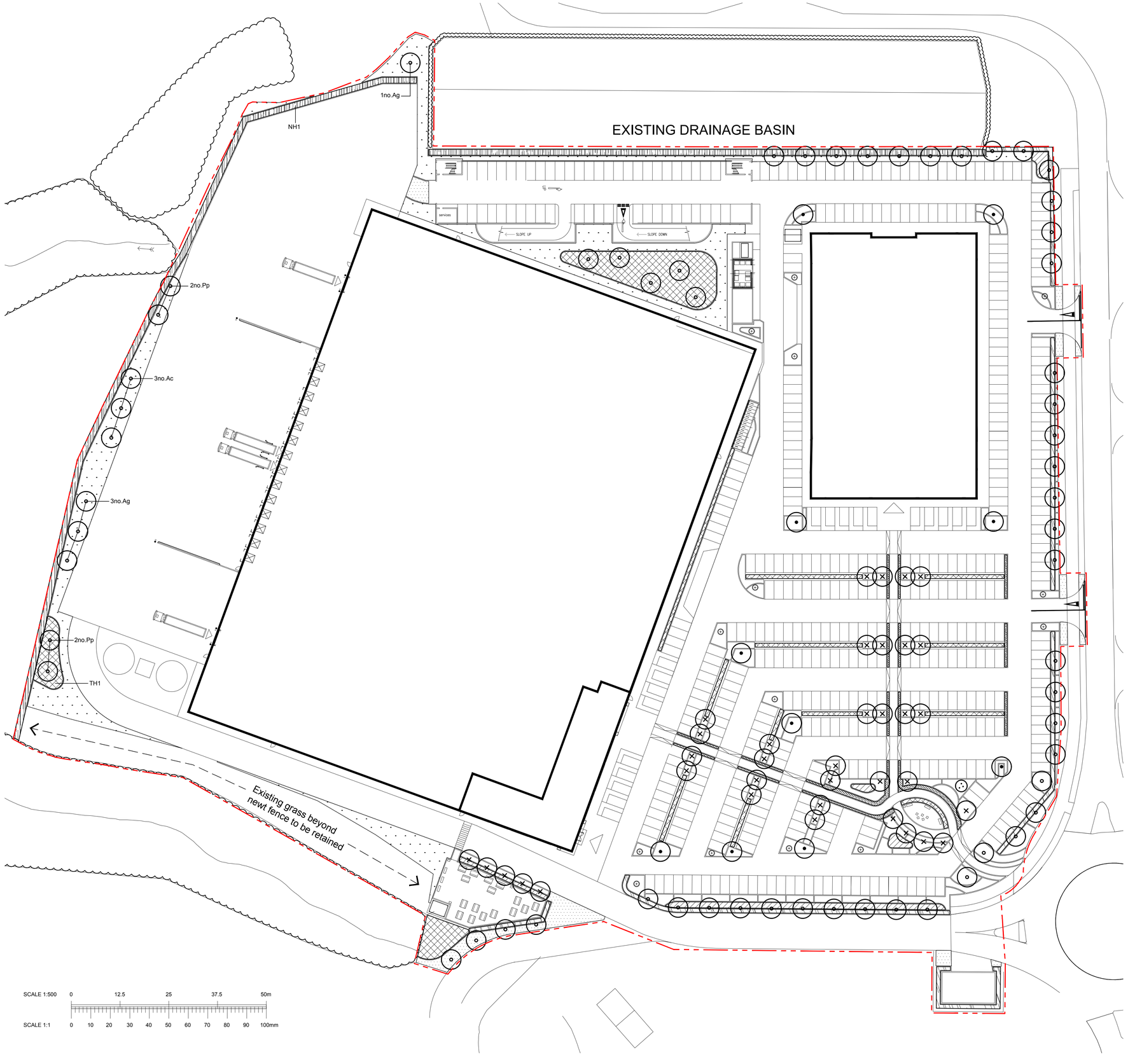

KEY

EXISTING HEDGEROW AND TREES TO BE RETAINED

EXTRA HEAVY STANDARD TREES
(*Tree pit size: 1000x1000x750mm backfilled with topsoil*)
14-16cm girth
4.25-5.5m height
1.8-2.1m clear stem
Rootballed

Ac Acer campestre
Ag Alnus glutinosa
Pp Prunus padus

PROPOSED THICKET MIX PLANTING
(*300mm depth of topsoil*)
Where woodland or thicket is planted next to a hard surface/kerb/fence, it should be positioned 1m from the edge.Transplants planted in groups of 3-15 of the same species on a 1.0m grid.
Rabbit Protection: Shelter guards for whips/ transplants

(88m²)

%	Species	Common Name	Size	Age	Root	TH1
3%	Acer campestre	Field Maple	400-600mm	1+1	OG	3no.
17%	Corylus avellana	Hazel	400-600mm	1+1	OG	15no.
27%	Crataegus monogyna	Hawthorn	400-600mm	1+1	OG	22no.
5%	Ilex aquifolium	Holly	400-600mm		2L	4no.
2%	Lonicera pericyclamen	Honeysuckle	300-400mm		2L	2no.
2%	Rosa arvensis	Field Rose	300-400mm		2L	2no.
3%	Rosa canina	Dog Rose	300-400mm		2L	3no.
15%	Prunus spinosa	Blackthorn	600-800mm	1+1	OG	13no.
3%	Sambucus nigra	Elder	600-800mm	1+1	OG	3no.
10%	Salix caprea	Goat willow	600-800mm	1+0	OG	9no.
3%	Salix cinerea	Grey Willow	600-800mm	1+0	OG	3no.
5%	Viburnum opulus	Guelder Rose	600-800mm	1+1	OG	4no.

Feathered Trees - Well furnished with lateral roots to the base.

%	Species	Common Name	Size	Root	TH1
2%	Acer campestre	Field Maple	1.8-2.1m height	BR	2no.
3%	Corylus avellana	Hazel	1.8-2.1m height	BR	3no.
				Total	**88no.**

PROPOSED INDIGENOUS HEDGEROW (TRIPLE ROW)
(*300mm depth of topsoil*)
Planted as triple staggered row, plants at 350mm centres and rows set 350mm apart. Back row to be 100% Crataegus. Remaining species to be random mixed in groups of 3-5 in front row.
Rabbit Protection: Shelter guards for whips/ transplants

(216lin m)

%	Species	Common Name	Size	Age	Root	NH1
7%	Acer campestre	Field maple	600-800mm	1+1	OG	130no.
8%	Corylus avellana	Hazel	600-800mm	1+1	OG	148no.
50%	Crataegus monogyna	Hawthorn	600-800mm	1+1	OG	925no.
5%	Ilex aquifolium	Holly	400-600mm		2L	93no.
2%	Lonicera pericyclamen	Honeysuckle	300-400mm		2L	37no.
20%	Prunus spinosa	Blackthorn	600-800mm	1+1	OG	370no.
2%	Rosa arvensis	Field rose	300-400mm		2L	37no.
2%	Rosa canina	Dog rose	300-400mm		2L	37no.
2%	Salix caprea	Goat willow	600-800mm	1+0	OG	37no.
2%	Salix cinerea	Grey willow	600-800mm	1+0	OG	37no.
				Total		**1851no.**

PROPOSED MEADOW SEEDED AREAS
(Cultivated subsoil to a depth of *300mm*)
Area to be sown with Emorsgate EM4 Meadow mixture for clay soils at a rate of 4g/m²

PROPOSED MOWN GRASS AREAS
(*150mm depth of topsoil*)
Area to be sown with DLF Seeds Ltd
PM 125 Clearsky mix at a rate of 20g/m²

SITE BOUNDARY

NOTES

To be read in conjunction with BCA drawings 05+06

NORTH

REV	NOTE	DATE	AUTH

BARRY CHINN associates
Landscape Architects

CLIENT
ICON INDUSTRIAL

PROJECT
ICON MANCHESTER AIRPORT
THE HUT GROUP

DRAWING
DETAILED PLANTING PLAN
1 of 3

CONTRACT 1881/18			DRG NO. 04
DATE 07/11/18		DRAWN JP	
ISSUE Tender		CHECKED MB	
SCALE 1:500		ORIG SHEET A1	REV -
CAD FILE 1881-18-04+05+06 Detailed Planting Plan.dwg			

Barry Chinn Associates Limited: Harbury Road, Deppers Bridge, Southam, Warwickshire CV47 2SZ
T +44 (0)1926 614031 F +44 (0)1926 614433 E gen@bca-landscape.com W www.bca-landscape.com

COPYRIGHT RESERVED
DO NOT SCALE FROM THIS DRAWING

NOTES

To be read in conjunction with BCA drawings 04+06

NORTH

REFER TO BCA DRAWING 04 FOR CONTINUATION

REFER TO BCA DRAWING 06

KEY

EXISTING HEDGEROW AND TREES TO BE RETAINED

SEMI-MATURE TREE
(*Tree pit size: 2000x2000x1000mm backfilled with topsoil*)
20-25cm stem girth
6.0-7.0m height
2.1m+ clear stem
Rootballed

Ls Liquidamber styraciflua

EXTRA HEAVY STANDARD TREES
FASTIGIATE FORM
(*Tree pit size: 1500x1500x900mm backfilled with topsoil*)
18-20cm stem girth
4.5-6.5m height
1.8-2.1m clear stem
Rootballed

Cb'L' Carpinus betulus 'Lucas'

EXTRA HEAVY STANDARD TREES
(*Tree pit size: 1000x1000x750mm backfilled with topsoil*)
14-16cm girth
4.25-5.5m height
1.8-2.1m clear stem
Rootballed

Ac Acer campestre
Ag Alnus glutinosa
Pp Prunus padus
Tc'G' Tilia cordata 'Greenspire'

PROPOSED MULTI-STEM TREES
(*Tree pit size: 1000x1000x750mm backfilled with topsoil*)
3.5-4.0m height
5x transplanted
Rootballed

Buj Betula utilis jacquemontii

PROPOSED SPECIMEN SHRUBS
(*300mm depth of topsoil*)

Species	Supply Size	Pot Size
Amelanchier canadensis	900-1200mm	15L
Miscanthus sinensis 'Ferner Osten'	Clump	7.5L

PROPOSED ORNAMENTAL SHRUB PLANTING
(*300mm depth of topsoil*)
Ultimate plant height is above 1m.

Species	Supply Size	Pot Size	Spacing
Photinia fraserii 'Red Robin'	400-600mm	3L	750mm c/s
Spiraea nipponica 'Snowmound'	400-600mm	3L	600mm c/s
Philadelphus 'Belle Etoile'	400-600mm	3L	600mm c/s

PROPOSED LOW GROUNDCOVER PLANTING
(*300mm depth of topsoil*)
Ultimate plant height is below 1m.

Species	Supply Size	Pot Size	Spacing
Choisya 'Aztec Pearl'	300-400mm	3L	500mm c/s
Euonymus fortunei 'Emerald Gaiety'	200-300mm	3L	450mm c/s
Genista lydia	300-400mm	3L	450mm c/s
Hebe 'Oratia Beauty'	300-400mm	3L	500mm c/s
Hebe pinguifolia 'Sutherlandii'	200-300mm	3L	500mm c/s
Lavandula angustifolia 'Hidcote'	200-300mm	3L	450mm c/s
Lonicera pileata	300-400mm	2L	500mm c/s
Luzula sylvatica	Clump	2L	450mm c/s
Pachysandra terminalis	150-200mm	2L	400mm c/s
Persicaria affinis 'Darjeeling Red'	Clump	2L	350mm c/s
Potentilla fruticosa 'Elizabeth'	200-300mm	3L	500mm c/s
Rosa 'Kent'	300-400mm	3L	450mm c/s
Rosmarinus officinalis	300-400mm	2L	450mm c/s

PROPOSED MEADOW SEEDED AREAS
(Cultivated subsoil to a depth of *300mm*)
Area to be sown with Emorsgate EM4 Meadow mixture for clay soils at a rate of 4g/m²

PROPOSED MOWN GRASS AREAS
(*150mm depth of topsoil*)
Area to be sown with DLF Seeds Ltd
PM 125 Clearsky mix at a rate of 20g/m²

PROPOSED THICKET MIX PLANTING
(*300mm depth of topsoil*)
Where woodland or thicket is planted next to a hard surface/kerb/fence, it should be positioned 1m from the edge.Transplants planted in groups of 3-15 of the same species on a 1.0m grid.
Rabbit Protection: Shelter guards for whips/ transplants

%	Species	Common Name	Size	Age	Root	TH2 (369m²)	TH3 (88m²)
3%	Acer campestre	Field Maple	400-600mm	1+1	OG	11no.	3no.
17%	Corylus avellana	Hazel	400-600mm	1+1	OG	65no.	15no.
27%	Crataegus monogyna	Hawthorn	400-600mm	1+1	OG	100no.	22no.
5%	Ilex aquifolium	Holly	400-600mm		2L	18no.	4no.
2%	Lonicera pericyclamen	Honeysuckle	300-400mm		2L	7no.	2no.
2%	Rosa arvensis	Field Rose	300-400mm		2L	7no.	2no.
3%	Rosa canina	Dog Rose	300-400mm		2L	11no.	3no.
15%	Prunus spinosa	Blackthorn	600-800mm	1+1	OG	55no.	13no.
3%	Sambucus nigra	Elder	600-800mm	1+1	OG	11no.	3no.
10%	Salix caprea	Goat willow	600-800mm	1+0	OG	37no.	9no.
3%	Salix cinerea	Grey Willow	600-800mm	1+0	OG	11no.	3no.
5%	Viburnum opulus	Guelder Rose	600-800mm	1+1	OG	18no.	4no.

Feathered Trees - Well furnished with lateral roots to the base.

%	Species	Common Name	Size	Root	TH2	TH3
2%	Acer campestre	Field Maple	1.8-2.1m height	BR	7no.	2no.
3%	Corylus avellana	Hazel	1.8-2.1m height	BR	11no.	3no.
				Total	369	88

PROPOSED ORNAMENTAL HEDGEROW
(*300mm depth of topsoil*)
Planted at 450mm centres in a double staggered row.
Rows to be 500mm apart. Hedge to be maintained at 1m high.

Species	Size	Pot Size
Escallonia 'Donard Seedling'	400-600mm	3L

PROPOSED ORNAMENTAL HEDGEROW (LOW CLIPPED)
(*300mm depth of topsoil*)
Planted at 300mm centres in a double staggered row.
Rows to be 300mm apart. Hedge to be maintained at 0.5m high.

Species	Size	Pot Size
Lonicera nitida	300-400mm	2L

FENCE

SITE BOUNDARY

PROPOSED INDIGENOUS HEDGEROW
(*300mm depth of topsoil*)
Planted as double staggered row, plants at 350mm centres and rows set 350mm apart. Back row to be 100% Crataegus. Remaining species to be random mixed in groups of 3-5 in front row.
Rabbit Protection: Shelter guards for whips/ transplants

%	Species	Common Name	Size	Age	Root	NH3 (52lin m)	NH4 (65lin m)	NH5 (62lin m)	NH6 (88lin m)	NH7 (39lin m)	NH8 (24lin m)
7%	Acer campestre	Field maple	600-800mm	1+1	OG	20no.	26no.	25no.	35no.	16no.	10no.
8%	Corylus avellana	Hazel	600-800mm	1+1	OG	24no.	30no.	28no.	40no.	18no.	11no.
50%	Crataegus monogyna	Hawthorn	600-800mm	1+1	OG	149no.	186no.	177no.	252no.	112no.	69no.
5%	Ilex aquifolium	Holly	400-600mm		2L	15no.	19no.	18no.	25no.	11no.	7no.
2%	Lonicera pericyclamen	Honeysuckle	300-400mm		2L	6no.	7no.	7no.	10no.	4no.	3no.
20%	Prunus spinosa	Blackthorn	600-800mm	1+1	OG	59no.	75no.	71no.	101no.	45no.	25no.
2%	Rosa arvensis	Field rose	300-400mm		2L	6no.	7no.	7no.	10no.	4no.	3no.
2%	Rosa canina	Dog rose	300-400mm		2L	6no.	7no.	7no.	10no.	4no.	3no.
2%	Salix caprea	Goat willow	600-800mm	1+0	OG	6no.	7no.	7no.	10no.	4no.	3no.
2%	Salix cinerea	Grey willow	600-800mm	1+0	OG	6no.	7no.	7no.	10no.	4no.	3no.
					Total	297	371	354	503	223	137

PROPOSED INDIGENOUS HEDGEROW (TRIPLE ROW)
(*300mm depth of topsoil*)
Planted as triple staggered row, plants at 350mm centres and rows set 350mm apart. Back row to be 100% Crataegus. Remaining species to be random mixed in groups of 3-5 in front row.
Rabbit Protection: Shelter guards for whips/ transplants

%	Species	Common Name	Size	Age	Root	NH2 (143lin m)
7%	Acer campestre	Field maple	600-800mm	1+1	OG	86no.
8%	Corylus avellana	Hazel	600-800mm	1+1	OG	98no.
50%	Crataegus monogyna	Hawthorn	600-800mm	1+1	OG	613no.
5%	Ilex aquifolium	Holly	400-600mm		2L	61no.
2%	Lonicera pericyclamen	Honeysuckle	300-400mm		2L	25no.
20%	Prunus spinosa	Blackthorn	600-800mm	1+1	OG	243no.
2%	Rosa arvensis	Field rose	300-400mm		2L	25no.
2%	Rosa canina	Dog rose	300-400mm		2L	25no.
2%	Salix caprea	Goat willow	600-800mm	1+0	OG	25no.
2%	Salix cinerea	Grey willow	600-800mm	1+0	OG	25no.
					Total	1226

9no. Tc'G'
4no. Tc'G'
56no. Pachysandra terminalis@400c/s
59no. Philadelphus 'Belle Etoile'@600c/s
1no. Ls
84no. Hebe pinguifolia 'Sutherlandii'@500c/s
75no. Rosmarinus officinalis@450c/s
60no. Rosmarinus officinalis@450c/s
60no. Hebe pinguifolia 'Sutherlandii'@500c/s
1no. Ls
NH3
1no. Amelanchier canadensis
72no. Persicaria affinis 'Darjeeling Red'@350c/s
60no. Lonicera pileata@500c/s
20no. Lonicera pileata@500c/s
7no. Tc'G'
15no. Luzula sylvatica@450c/s
16no. Lonicera pileata@500c/s
20no. Euonymus fortunei 'Emerald Gaiety'@450c/s
20no. Lonicera pileata@500c/s
NH4
25no. Euonymus fortunei 'Emerald Gaiety'@450c/s
24no. Lonicera pileata@500c/s
50no. Euonymus fortunei 'Emerald Gaiety'@450c/s
NH5
NH6
NH7
NH8
1no. Amelanchier canadensis
40no. Lonicera pileata@500c/s
1no. Amelanchier canadensis
80no. Lonicera pileata@500c/s
1no. Amelanchier canadensis
85no. Luzula sylvatica@450c/s
40no. Euonymus fortunei 'Emerald Gaiety'@450c/s
63no. Pachysandra terminalis@400c/s
55no. Euonymus fortunei 'Emerald Gaiety'@450c/s
88no. Pachysandra terminalis@400c/s
3no. Pp
2no. Ac
TH2
TH3
4no.Tc'G'
5no. Cb'L'
30no. Rosa 'Kent'@450c/s
24no. Potentilla fruticosa 'Elizabeth'@500c/s
25no. Rosa 'Kent'@450c/s
20no. Potentilla fruticosa 'Elizabeth'@500c/s
25no. Rosa 'Kent'@450c/s
62no. Spiraea nipponica 'Snowmound'@600c/s

ORNAMENTAL HEDGEROW
244no. Escallonia 'Donard Seedling'
This hedgerow is to be planted either side of a post and 3wire fence, refer to BCA drawing 1881-18-11 for fence details.

ORNAMENTAL HEDGEROW 133no. Escallonia 'Donard Seedling'
ORNAMENTAL HEDGEROW 73no. Lonicera nitida
ORNAMENTAL HEDGEROW 73no. Lonicera nitida
ORNAMENTAL HEDGEROW 89no. Escallonia 'Donard Seedling'
ORNAMENTAL HEDGEROW 73no. Lonicera nitida
ORNAMENTAL HEDGEROW 120no. Escallonia 'Donard Seedling'
ORNAMENTAL HEDGEROW 73no. Lonicera nitida
ORNAMENTAL HEDGEROW 73no. Lonicera nitida
ORNAMENTAL HEDGEROW 89no. Escallonia 'Donard Seedling'
ORNAMENTAL HEDGEROW 73no. Lonicera nitida
ORNAMENTAL HEDGEROW 67no. Escallonia 'Donard Seedling'
ORNAMENTAL HEDGEROW 67no. Escallonia 'Donard Seedling'
ORNAMENTAL HEDGEROW 73no. Lonicera nitida
ORNAMENTAL HEDGEROW 73no. Lonicera nitida
ORNAMENTAL HEDGEROW 89no. Escallonia 'Donard Seedling'
ORNAMENTAL HEDGEROW 73no. Lonicera nitida
ORNAMENTAL HEDGEROW 73no. Lonicera nitida
ORNAMENTAL HEDGEROW 36no. Escallonia 'Donard Seedling'
ORNAMENTAL HEDGEROW 73no. Lonicera nitida
ORNAMENTAL HEDGEROW 73no. Lonicera nitida
ORNAMENTAL HEDGEROW 213no. Lonicera nitida
ORNAMENTAL HEDGEROW 193no. Lonicera nitida
ORNAMENTAL HEDGEROW 73no. Lonicera nitida
ORNAMENTAL HEDGEROW 80no. Escallonia 'Donard Seedling'
ORNAMENTAL HEDGEROW 58no. Escallonia 'Donard Seedling'
ORNAMENTAL HEDGEROW 167no. Lonicera nitida
ORNAMENTAL HEDGEROW 71no. Escallonia 'Donard Seedling'

DETAIL - A
DETAIL - B
DETAIL - C

DETAIL - A
Scale 1:50

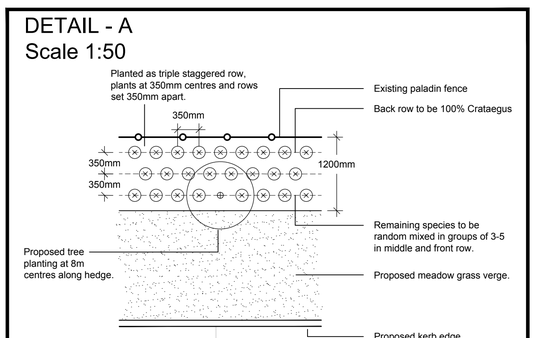

DETAIL - B
Scale 1:50

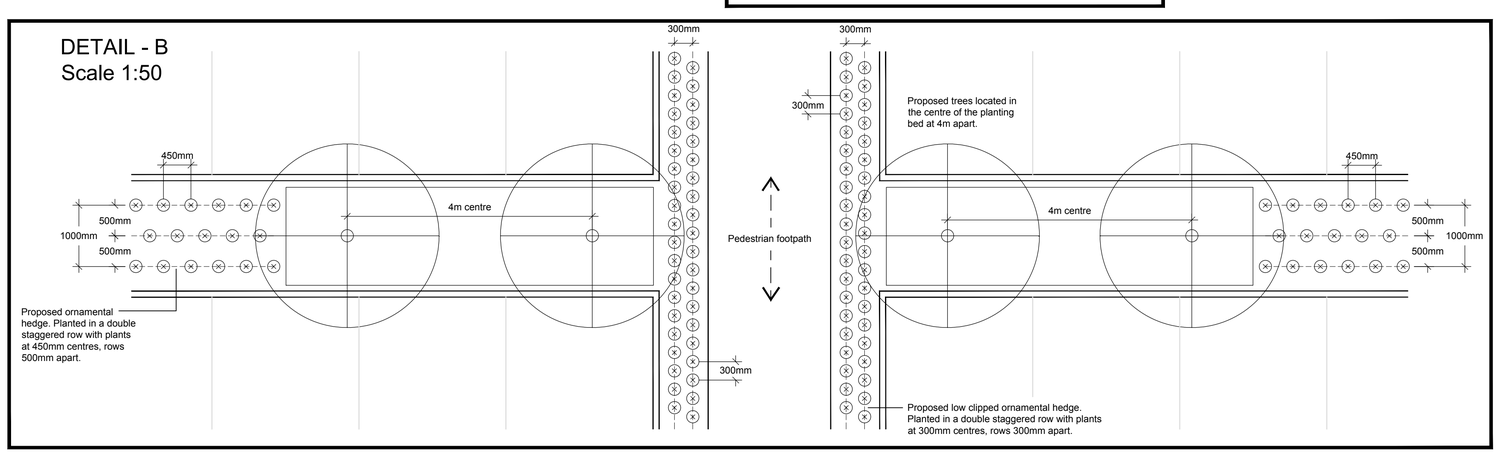

DETAIL - C
Scale 1:50

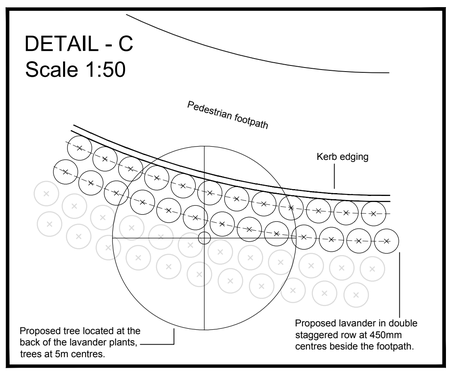

SCALE 1:250 0 6.25 12.5 18.75 25m

SCALE 1:1 0 10 20 30 40 50 60 70 80 90 100mm

REV NOTE DATE AUTH

BCA BARRY CHINN associates Landscape Architects

CLIENT
ICON INDUSTRIAL

PROJECT
ICON MANCHESTER AIRPORT
THE HUT GROUP

DRAWING
DETAILED PLANTING PLAN
2 of 3

CONTRACT 1881/18			DRG NO. 05
DATE 07/11/18	DRAWN JP		
ISSUE Tender	CHECKED MB		
SCALE 1:250	ORIG SHEET A0		REV -
CAD FILE 1881-18-04+05+06 Detailed Planting Plan.dwg			

Barry Chinn Associates Limited: Harbury Road, Deppers Bridge, Southam, Warwickshire CV47 2SZ
T +44 (0)1926 614031 F +44 (0)1926 614433 E gen@bca-landscape.com W www.bca-landscape.com

COPYRIGHT RESERVED
DO NOT SCALE FROM THIS DRAWING

REFER TO BCA DRAWING 05 FOR CONTINUATION

REFER TO BCA DRAWING 04 FOR CONTINUATION

SCALE 1:200 0 5 10 15 20m

SCALE 1:1 0 10 20 30 40 50 60 70 80 90 100mm

64no. Hebe pinguifolia 'Sutherlandii'@500c/s
1no. Ls
20no. Rosmarinus officinalis@450c/s
68no. Lonicera pileata@500c/s
35no. Rosmarinus officinalis@450c/s
1no. Ls
76no. Hebe pinguifolia 'Sutherlandii'@500c/s
4no. Cb'L'
1no. Amelanchier canadensis
96no. Persicaria affinis 'Darjeeling Red'@350c/s
40no. Hebe 'Oratia Beauty'@500c/s
40no. Hebe 'Oratia Beauty'@500c/s
48no. Hebe pinguifolia 'Sutherlandii'@500c/s
2no. Miscanthus sinensis 'Ferner Osten'
56no. Hebe pinguifolia 'Sutherlandii'@500c/s
1no. Miscanthus sinensis 'Ferner Osten'
95no. Euonymus fortunei 'Emerald Gaiety'@450c/s
64no. Choisya 'Aztec Pearl'@500c/s
4no. Cb'L'
1no. Ls
88no. Lonicera pileata@500c/s
40no. Hebe 'Oratia Beauty'@500c/s
40no. Hebe 'Oratia Beauty'@500c/s
55no. Euonymus fortunei 'Emerald Gaiety'@450c/s
4no. Tc'G'
85no. Euonymus fortunei 'Emerald Gaiety'@450c/s
1no. Amelanchier canadensis
64no. Choisya 'Aztec Pearl'@500c/s
4no. Cb'L'
1no. Ls
92no. Lonicera pileata@500c/s
40no. Hebe 'Oratia Beauty'@500c/s
40no. Hebe 'Oratia Beauty'@500c/s
32no. Lonicera pileata@500c/s
4no. Cb'L'
40no. Hebe 'Oratia Beauty'@500c/s
4no. Cb'L'
40no. Hebe 'Oratia Beauty'@500c/s
40no. Hebe 'Oratia Beauty'@500c/s
75no. Pachysandra terminalis@400c/s
4no. Cb'L'
172no. Hebe 'Oratia Beauty'@500c/s
17no. Photinia fraserii 'Red Robin'@750c/s
2no. Cb'L'
56no. Hebe 'Oratia Beauty'@500c/s
1no. Buj
105no. Euonymus fortunei 'Emerald Gaiety'@450c/s
38no. Pachysandra terminalis@400c/s
1no. Ls
30no. Luzula sylvatica@450c/s
76no. Lonicera pileata@500c/s
1no. Tc'G'
64no. Lonicera pileata@500c/s
85no. Lavandula angustifolia 'Hidcote'@450c/s
60no. Choisya 'Aztec Pearl'@500c/s
5no. Cb'L'
90no. Rosa 'Kent'@450c/s
2no. Tc'G'
90no. Rosa 'Kent'@450c/s
27no. Photinia fraserii 'Red Robin'@750c/s
1no. Miscanthus sinensis 'Ferner Osten'
32no. Potentilla fruticosa 'Elizabeth'@500c/s
1no. Miscanthus sinensis 'Ferner Osten'
2no. Tc'G'
90no. Euonymus fortunei 'Emerald Gaiety'@450c/s
145no. Rosa 'Kent'@450c/s
2no. Miscanthus sinensis 'Ferner Osten'
1no. Miscanthus sinensis 'Ferner Osten'
96no. Persicaria affinis 'Darjeeling Red'@350c/s
80no. Potentilla fruticosa 'Elizabeth'@500c/s
1no. Ls
95no. Euonymus fortunei 'Emerald Gaiety'@450c/s
1no. Ls
40no. Lonicera pileata@500c/s
48no. Persicaria affinis 'Darjeeling Red'@350c/s
120no. Persicaria affinis 'Darjeeling Red'@350c/s
44no. Lonicera pileata@500c/s
1no. Ls
130no. Euonymus fortunei 'Emerald Gaiety'@450c/s
30no. Genista lydia@450c/s
32no. Potentilla fruticosa 'Elizabeth'@500c/s
72no. Choisya 'Aztec Pearl'@500c/s
124no. Choisya 'Aztec Pearl'@500c/s
70no. Lavandula angustifolia 'Hidcote'@450c/s
55no. Lavandula angustifolia 'Hidcote'@450c/s
92no. Choisya 'Aztec Pearl'@500c/s
48no. Choisya 'Aztec Pearl'@500c/s
48no. Lonicera pileata@500c/s
48no. Potentilla fruticosa 'Elizabeth'@500c/s
48no. Lonicera pileata@500c/s
48no. Choisya 'Aztec Pearl'@500c/s
48no. Choisya 'Aztec Pearl'@500c/s
48no. Lonicera pileata@500c/s
48no. Potentilla fruticosa 'Elizabeth'@500c/s
48no. Lonicera pileata@500c/s
60no. Lonicera pileata@500c/s
115no. Rosa 'Kent'@450c/s
10no. Tc'G'
180no. Photinia fraserii 'Red Robin'@750c/s
80no. Lonicera pileata@500c/s

KEY

EXISTING HEDGEROW AND TREES TO BE RETAINED

SEMI-MATURE TREE
(*Tree pit size: 2000x2000x1000mm backfilled with topsoil*)
20-25cm stem girth
6.0-7.0m height
2.1m+ clear stem
Rootballed

Ls Liquidamber styraciflua

EXTRA HEAVY STANDARD TREES
FASTIGIATE FORM
(*Tree pit size: 1500x1500x900mm backfilled with topsoil*)
18-20cm stem girth
4.5-6.5m height
1.8-2.1m clear stem
Rootballed

Cb'L' Carpinus betulus 'Lucas'

EXTRA HEAVY STANDARD TREES
(*Tree pit size: 1000x1000x750mm backfilled with topsoil*)
14-16cm girth
4.25-5.5m height
1.8-2.1m clear stem
Rootballed

Ac Acer campestre
Ag Alnus glutinosa
Pp Prunus padus
Tc'G' Tilia cordata 'Greenspire'

PROPOSED MULTI-STEM TREES
(*Tree pit size: 1000x1000x750mm backfilled with topsoil*)
3.5-4.0m height
5x transplanted
Rootballed

Buj Betula utilis jacquemontii

PROPOSED SPECIMEN SHRUBS
(*300mm depth of topsoil*)

Species	Supply Size	Pot Size
Amelanchier canadensis	900-1200mm	15L
Miscanthus sinensis 'Ferner Osten'	Clump	7.5L

PROPOSED INDIGENOUS HEDGEROW
(*300mm depth of topsoil*)
Planted as double staggered row, plants at 350mm centres and rows set 350mm apart. Back row to be 100% Crataegus. Remaining species to be random mixed in groups of 3-5 in front row.
Rabbit Protection: Shelter guards for whips/ transplants

%	Species	Common Name	Size	Age	Root
7%	Acer campestre	Field maple	600-800mm	1+1	OG
8%	Corylus avellana	Hazel	600-800mm	1+1	OG
50%	Crataegus monogyna	Hawthorn	600-800mm	1+1	OG
5%	Ilex aquifolium	Holly	400-600mm		2L
2%	Lonicera periclymenen	Honeysuckle	300-400mm		2L
20%	Prunus spinosa	Blackthorn	600-800mm	1+1	OG
2%	Rosa arvensis	Field rose	300-400mm		2L
2%	Rosa canina	Dog rose	300-400mm		2L
2%	Salix caprea	Goat willow	600-800mm	1+0	OG
2%	Salix cinerea	Grey willow	600-800mm	1+0	OG

PROPOSED ORNAMENTAL HEDGEROW
(*300mm depth of topsoil*)
Planted at 450mm centres in a double staggered row.
Rows to be 500mm apart. Hedge to be maintained at 1m high.

Species	Size	Pot Size
Escallonia 'Donard Seedling'	400-600mm	3L

PROPOSED ORNAMENTAL HEDGEROW (LOW CLIPPED)
(*300mm depth of topsoil*)
Planted at 300mm centres in a double staggered row.
Rows to be 300mm apart. Hedge to be maintained at 0.5m high.

Species	Size	Pot Size
Lonicera nitida	300-400mm	2L

PROPOSED ORNAMENTAL SHRUB PLANTING
(*300mm depth of topsoil*)
Ultimate plant height is above 1m.

Species	Supply Size	Pot Size	Spacing
Photinia fraseriì 'Red Robin'	400-600mm	3L	750mm c/s
Spiraea nipponica 'Snowmound'	400-600mm	3L	600mm c/s
Philadelphus 'Belle Etoile'	400-600mm	3L	600mm c/s

PROPOSED LOW GROUNDCOVER PLANTING
(*300mm depth of topsoil*)
Ultimate plant height is below 1m.

Species	Supply Size	Pot Size	Spacing
Choisya 'Aztec Pearl'	300-400mm	3L	500mm c/s
Euonymus fortunei 'Emerald Gaiety'	200-300mm	3L	450mm c/s
Genista lydia	300-400mm	3L	450mm c/s
Hebe 'Oratia Beauty'	300-400mm	3L	500mm c/s
Hebe pinguifolia 'Sutherlandii'	200-300mm	3L	500mm c/s
Lavandula angustifolia 'Hidcote'	200-300mm	3L	450mm c/s
Lonicera pileata	300-400mm	2L	500mm c/s
Luzula sylvatica	Clump	2L	450mm c/s
Pachysandra terminalis	150-200mm	2L	400mm c/s
Persicaria affinis 'Darjeeling Red'	Clump	2L	350mm c/s
Potentilla fruticosa 'Elizabeth'	200-300mm	3L	500mm c/s
Rosa 'Kent'	300-400mm	3L	450mm c/s
Rosmarinus officinalis	300-400mm	2L	450mm c/s

PROPOSED MOWN GRASS AREAS
(*150mm depth of topsoil*)
Area to be sown with DLF Seeds Ltd
PM 125 Clearsky mix at a rate of 20g/m²

FENCE

SITE BOUNDARY

REV NOTE DATE AUTH

BARRY CHINN associates
Landscape Architects

CLIENT
ICON INDUSTRIAL

PROJECT
ICON MANCHESTER AIRPORT
THE HUT GROUP

DRAWING
DETAILED PLANTING PLAN
3 of 3

CONTRACT 1881/18			DRG NO.
DATE 07/11/18	DRAWN JP		06
ISSUE Tender	CHECKED MB		
SCALE 1:200	ORIG SHEET A1		REV
CAD FILE 1881-18-04+05+06 Detailed Planting Plan.dwg			-

NORTH

NOTES

To be read in conjunction with BCA drawings 05+06

Barry Chinn Associates Limited: Harbury Road, Deppers Bridge, Southam, Warwickshire CV47 2SZ
T +44 (0)1926 614031 F +44 (0)1926 614433 E gen@bca-landscape.com W www.bca-landscape.com

COPYRIGHT RESERVED
DO NOT SCALE FROM THIS DRAWING

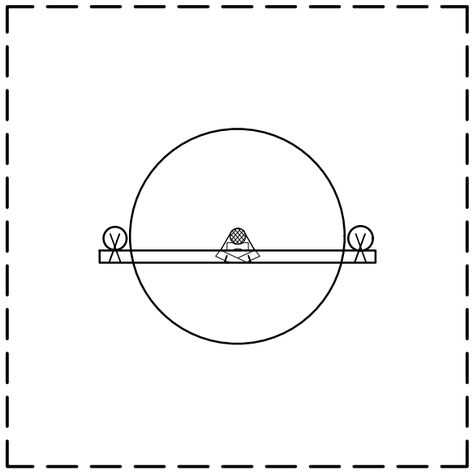

PLAN

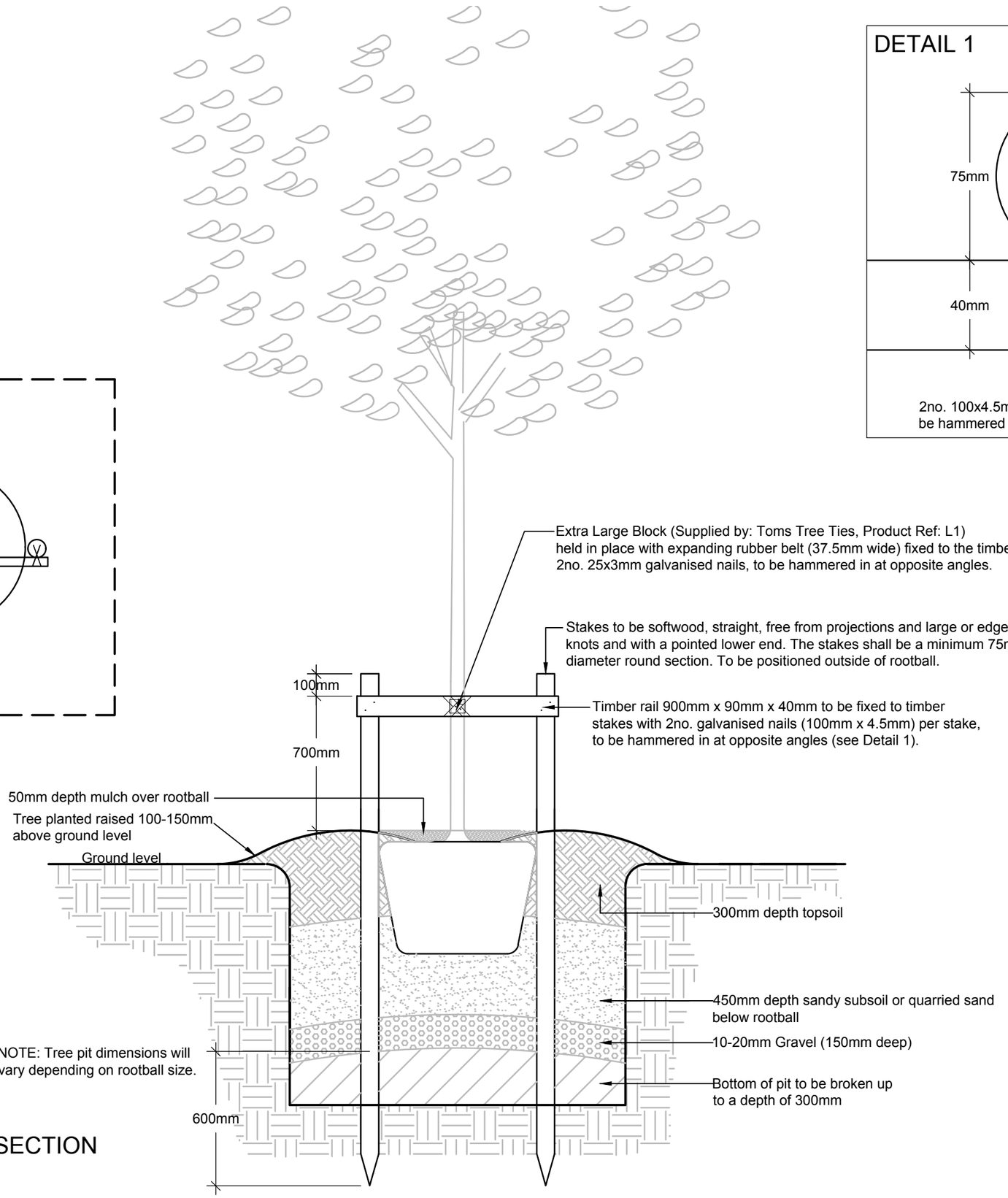

SECTION

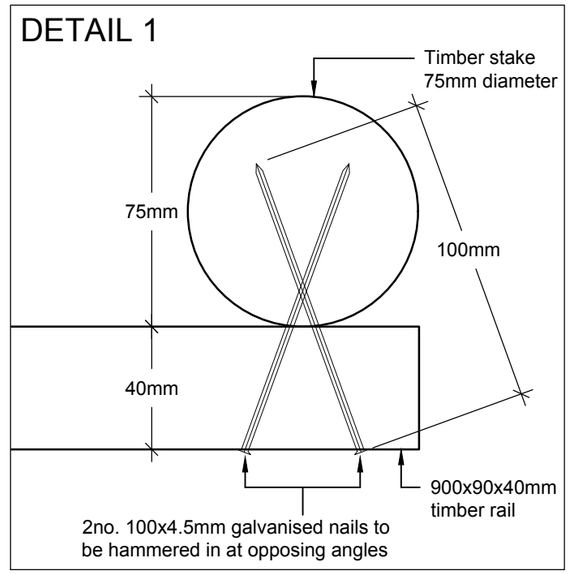

NOTES

Belting and block supplied by:

Tom Trees Ties Ltd.
7 Marley Farm
Headcorn Road
Smarden
Ashford
Kent
TN27 8PJ

Tel: (01233) 770066
Fax: (01233) 770055

or similar approved.

Applicable for use on extra heavy standard.

REV NOTE DATE AUTH

BARRY CHINN associates
Landscape Architects

CLIENT
ICON INDUSTRIAL

PROJECT
ICON MANCHESTER AIRPORT
THE HUT GROUP

DRAWING
TREE PIT CONSTRUCTION
WITH DOUBLE STAKING
WITH TIMBER CROSS BAR

CONTRACT 1881/18			DRG NO. 07
DATE 02/11/18	DRAWN JP		
ISSUE Tender	CHECKED MB		
SCALE 1:20	ORIG SHEET A3		REV -
CAD FILE 1881-18-07 - Double Stake Tree Pit Detail.dwg			

Barry Chinn Associates Limited: Harbury Road, Deppers Bridge, Southam, Warwickshire CV47 2SZ
T +44 (0)1926 614031 F +44 (0)1926 614433 E gen@bca-landscape.com W www.bca-landscape.com

COPYRIGHT RESERVED
DO NOT SCALE FROM THIS DRAWING

NOTES

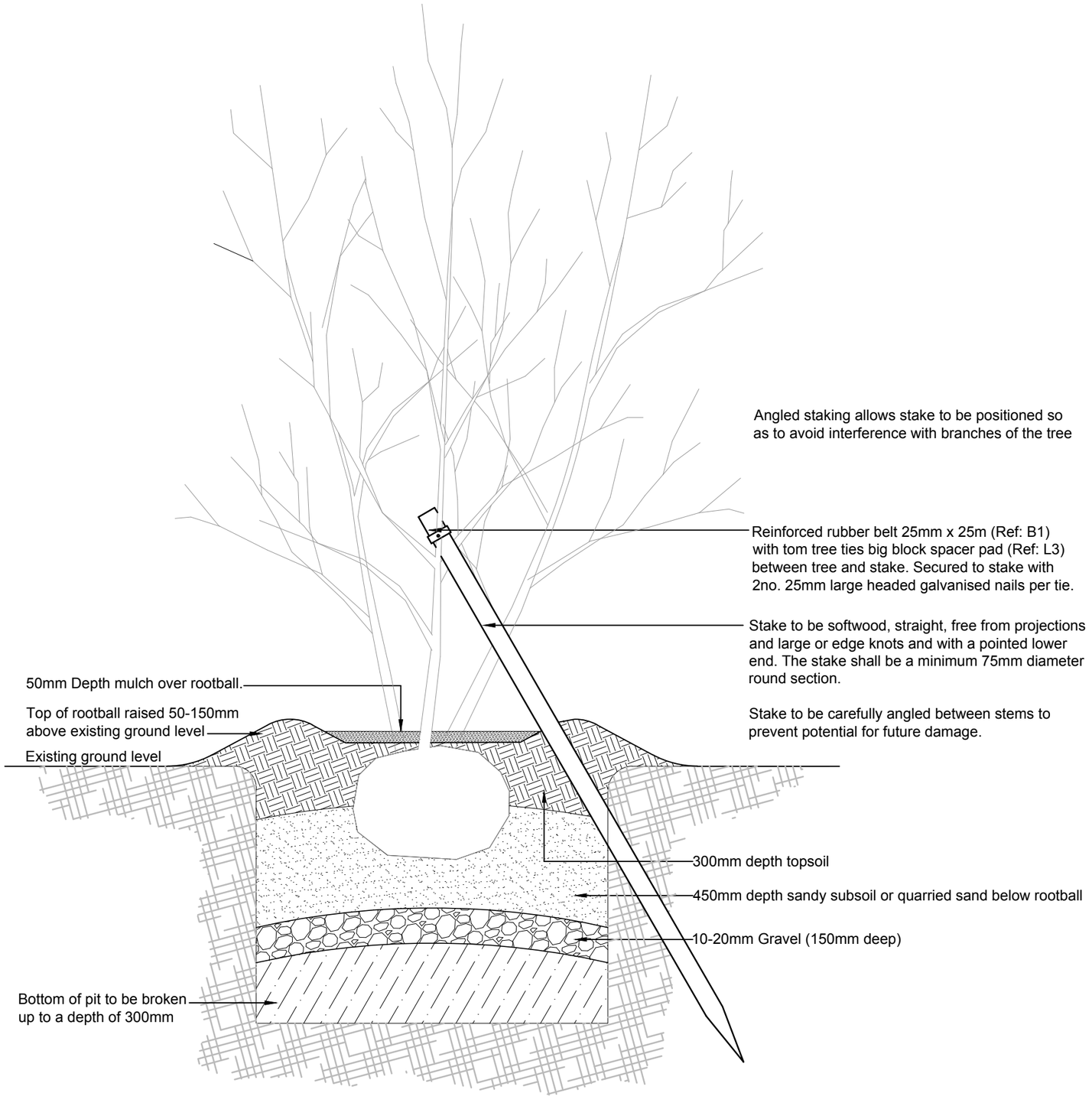

ANGLED STAKE DETAIL

Scale 1:20

Toms big block spacer pad supplied by:

J Toms Ltd
7 Marley Farm
Headcorn Road
Smarden
Ashford
Kent
TN27 8PJ
Tel. 01233 770066
Fax. 01233 770055

Reinforced rubber belt supplied by:

Amenity Land Solutions Limited,
Units 2/3
Allscot
Telford
Shropshire
TF6 5DY
Tel: 01952 259281/3
Fax: 01952 260053

REV NOTE DATE AUTH

BARRY CHINN associates
Landscape Architects

CLIENT
ICON INDUSTRIAL

PROJECT
ICON MANCHESTER AIRPORT
THE HUT GROUP

DRAWING
ANGLED STAKING
MULTI STEMMED TREES

CONTRACT 1881/18			DRG NO. 08
DATE 02/11/18		DRAWN JP	
ISSUE Tender		CHECKED MB	
SCALE 1:20		ORIG SHEET A3	REV -
CAD FILE 1881-18-08 - Angled Stake Tree Pit Detail.dwg			

Barry Chinn Associates Limited: Harbury Road, Deppers Bridge, Southam, Warwickshire CV47 2SZ
T +44 (0)1926 614031 F +44 (0)1926 614433 E gen@bca-landscape.com W www.bca-landscape.com

COPYRIGHT RESERVED
DO NOT SCALE FROM THIS DRAWING

NOTES

Underground guying products supplied by:
Platipus Anchors Ltd,
Kingsfield Business Centre,
Philanthropic Road,
Redhill,
Surrey
RH1 4DP Tel: (01737) 762300
Fax: (01737) 773395

PLATIPUS ANCHORING KIT NUMBER	TREE HEIGHT	ANCHOR MODEL	PLATIMAT
RF1	Up to 4.5m	S41	3no. 13-50cm panels
RF2	4.5 - 7.5m	S61	3no. 19x66cm panels
RF3	7.5 - 12.0m	S81	3no. 19x100cm panels

Platipus anchors installed in accordance with manufacturers recommendations.

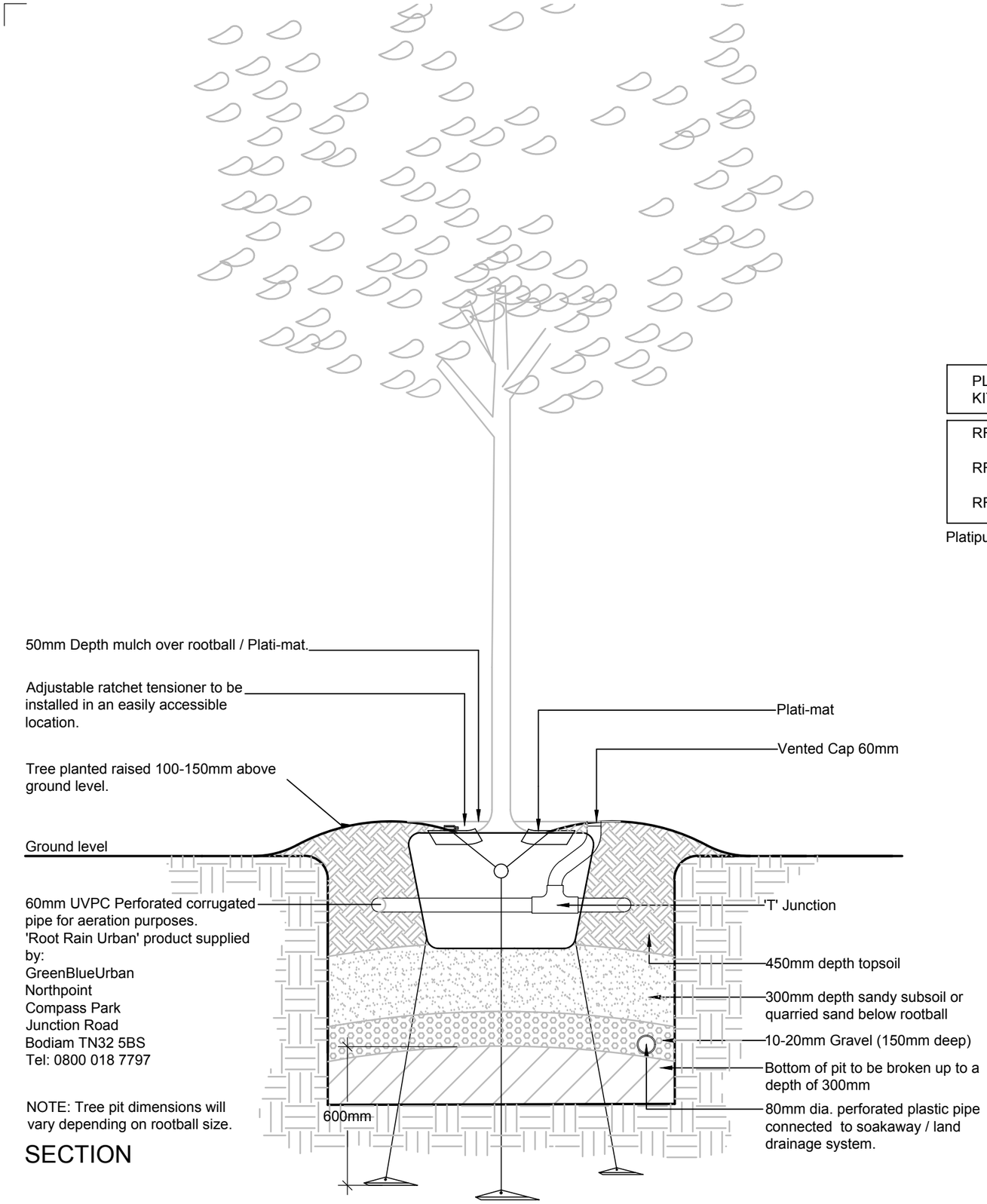

SECTION

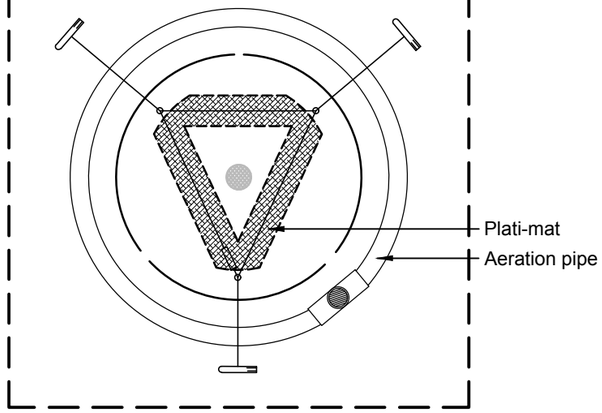

PLAN

REV NOTE DATE AUTH

BCA BARRY CHINN associates Landscape Architects

CLIENT
ICON INDUSTRIAL

PROJECT
ICON MANCHESTER AIRPORT
THE HUT GROUP

DRAWING
Semi mature tree planting in soft landscape areas with underground guying

CONTRACT 1881/18			DRG NO. 09
DATE 02/11/18	DRAWN JP		
ISSUE Tender	CHECKED MB		
SCALE 1:20	ORIG SHEET A3		REV -
CAD FILE 1881-18-09 - Semi Mature Tree Pit Detail.dwg			

Barry Chinn Associates Limited: Harbury Road, Deppers Bridge, Southam, Warwickshire CV47 2SZ
T +44 (0)1926 614031 F +44 (0)1926 614433 E geni@bca-landscape.com W www.bca-landscape.com

COPYRIGHT RESERVED
DO NOT SCALE FROM THIS DRAWING

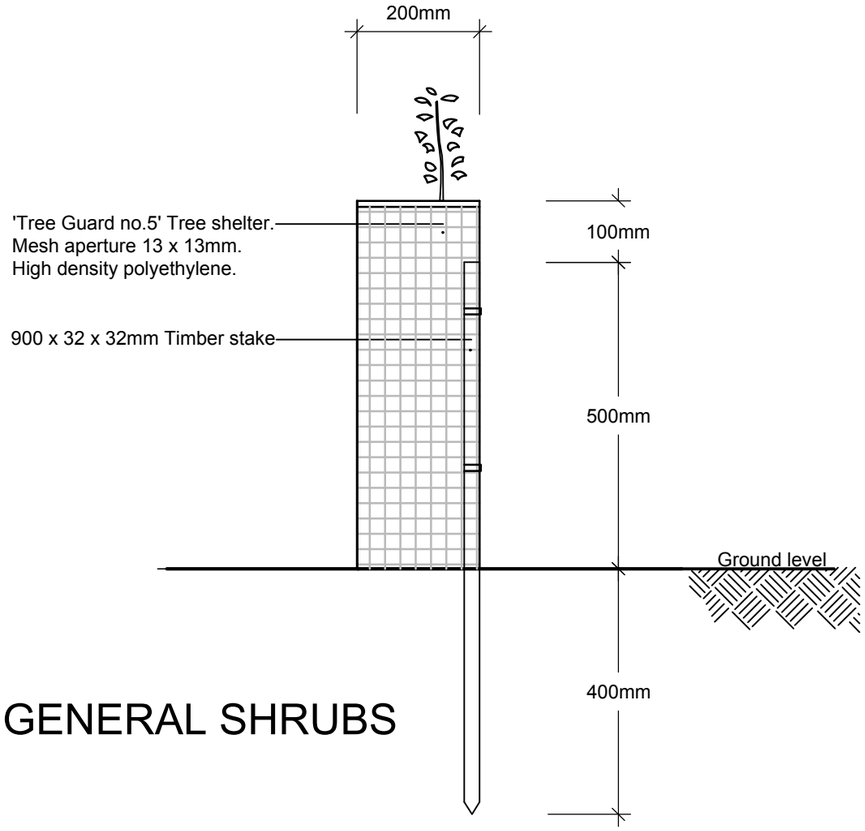

GENERAL SHRUBS

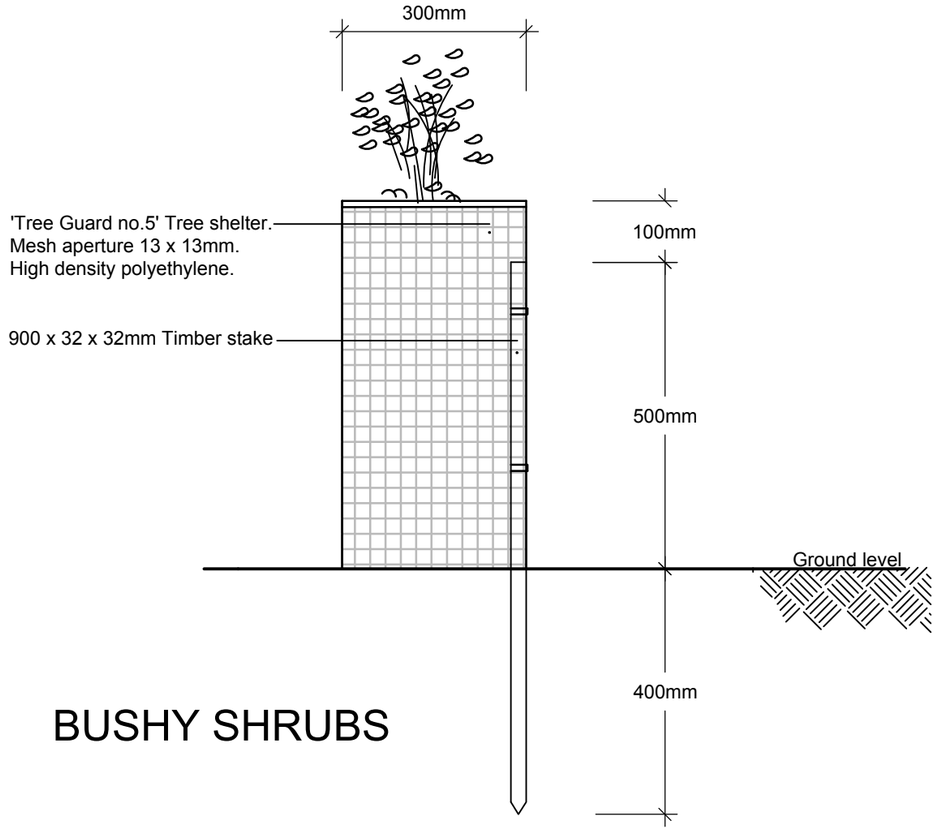

BUSHY SHRUBS

1. Supply and fix to hedging and transplant, 600mm 'Tree Guard Mesh no.5'. Shelter to be supplied in brown colour.
2. Tree shelter to be secured to a 900 x 32 x 32mm timber stake with two cable ties.
3. Plant Care 'Tree Guard Mesh no.5' to be supplied by:
   Amenity Land Solutions
   Allscott Park
   Allscott
   Telford
   Shropshire
   TF6 5DY
   Tel No. (01952) 641949

   or similar approved.
4. All hedging transplants to be protected with tree guards to prevent rabbit damage

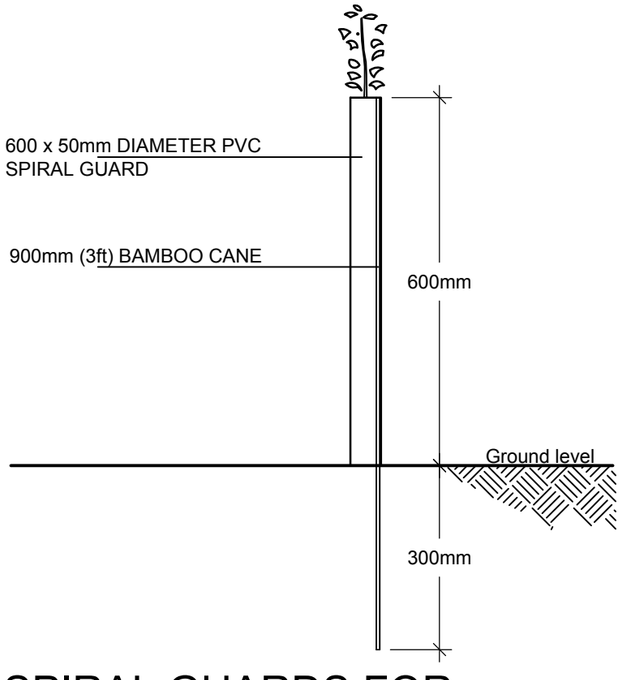

SPIRAL GUARDS FOR TRANSPLANT TREE PLANTING

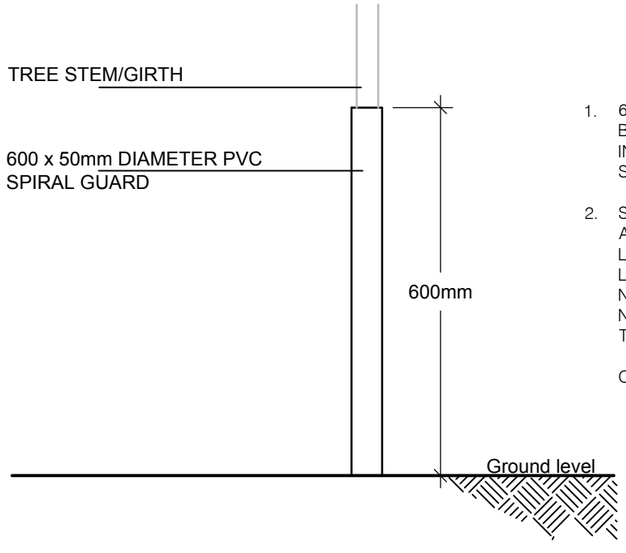

SPIRAL GUARDS FOR TREE PLANTING

1. 600 x 50mm DIAMETER PVC SPIRAL GUARD TO BE SUPPORTED BY INSERTION OF 900mm BAMBOO CANE (12-14lb per 100) INSIDE THE GUARD ALONGSIDE PLANT. SPIRAL GUARD TO BE SUPPLIED IN BROWN OR DARK GREEN COLOUR.
2. SPIRAL GUARD TO BE SUPPLIED BY:
   Acorn Planting Products Ltd
   Little Money Road
   Loddon
   Norwich
   NR14 6JD
   Tel No. (01508) 528763

   OR SIMILAR APPROVED.

REV NOTE DATE AUTH

BARRY CHINN associates
Landscape Architects

CLIENT
ICON INDUSTRIAL

PROJECT
ICON MANCHESTER AIRPORT
THE HUT GROUP

DRAWING
RABBIT PROTECTION SHELTERGUARDS AND SPIRALGUARDS

CONTRACT 1881/18			DRG NO. 10
DATE 02/11/18	DRAWN JP		
ISSUE Tender	CHECKED MB		
SCALE 1:10	ORIG SHEET A3		REV -
CAD FILE 1881-18-10 - Shelterguards & Spiralguards.dwg			

Barry Chinn Associates Limited: Harbury Road, Deppers Bridge, Southam, Warwickshire CV47 2SZ
T +44 (0)1926 614031 F +44 (0)1926 614433 E gen@bca-landscape.com W www.bca-landscape.com

COPYRIGHT RESERVED
DO NOT SCALE FROM THIS DRAWING

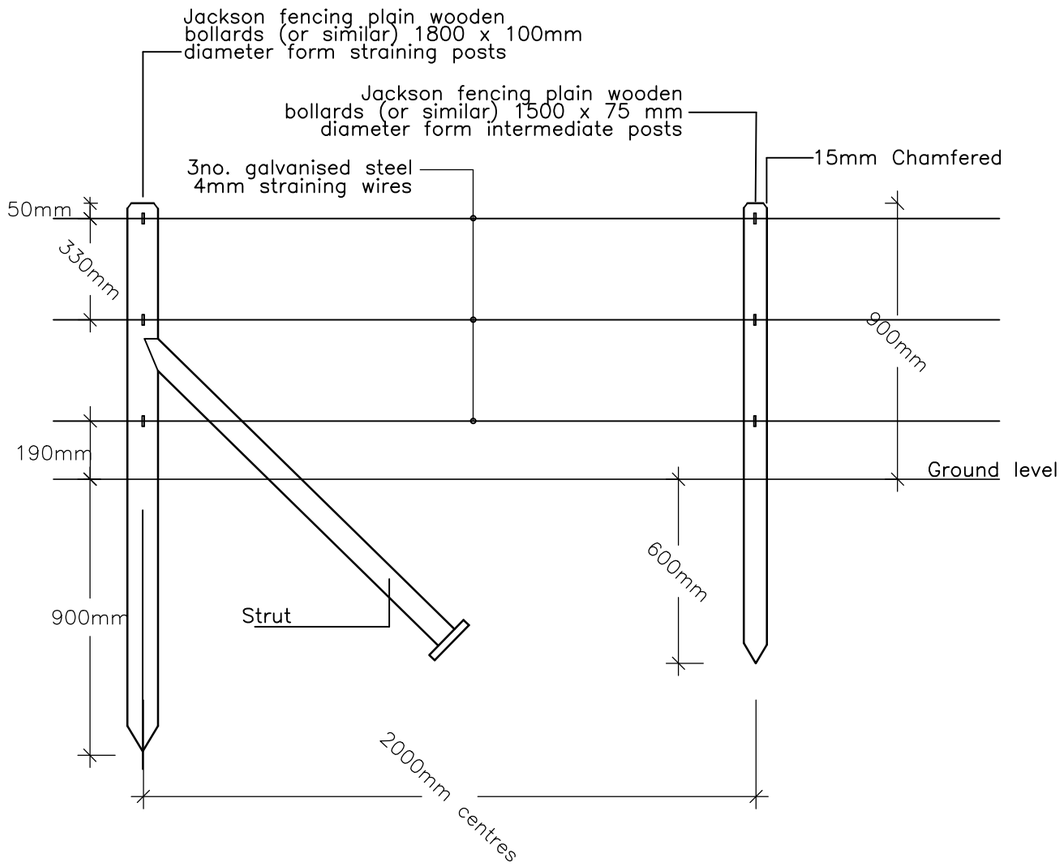

POST AND WIRE FENCE

Scale 1:20

NOTES

1. Straining posts of machine rounded timber 1.80m long with a top dia. of 100mm and set in the ground to a depth of 900mm will be provided at all ends and at staining intervals to be advised.

2. Each straining post shall be fitted with 1.2m long machine rounded timber struts in the direction of each line of fencing secured to them.
3. Struts should have a top dia. of approx. 75mm. be shaped to fit (approx.) the straining post and be secured to the straining post with 1no. 100 x 4mm dia. galvanised round steel wire.
4. The base of the struts shall be set in the ground to a depth of 450mm and be fitted with 160 x 160 x 25mm wooden base plates which shall be secured with 4 galvanised round wire nails.

5. Intermediate posts of machine rounded timber 1.50m long with a top dia. of 75mm and set in the ground to a depth of 600mm will be provided at intervals of 2.0m.

6. All posts and struts to be pressure impregnated with an approved preservative in accordance with BS1722 Part 2 1973.

7. Three no. 4mm core galvanised steel straining wires shall be provided at the intervals shown on the drawing, secured to intermediate posts with 40 x 4mm dia. galvanised steel wire staples. Staples to be part driven to allow for re–tensioning.

8. All wires, straining rachets and fixings to be galvanised in accordance with BS729.

9. Wooden posts and struts to be stained with Sadolins Classic, colour to be advised.

REV NOTE | DATE AUTH

BARRY CHINN associates
Landscape Architects

CLIENT
ICON INDUSTRIAL

PROJECT
ICON MANCHESTER AIRPORT
THE HUT GROUP

DRAWING
POST AND WIRE FENCE

CONTRACT 1881/18			DRG NO. 11
DATE 12/11/18		DRAWN JP	
ISSUE Tender		CHECKED MB	
SCALE 1:20		ORIG SHEET A3	REV -
CAD FILE 1881-18-11 - Post and Wire Fence Detail.dwg			

Barry Chinn Associates Limited: Harbury Road, Deppers Bridge, Southam, Warwickshire CV47 2SZ
T +44 (0)1926 614031 F +44 (0)1926 614433 E gen@bca-landscape.com W www.bca-landscape.com

APPENDIX C

DESIGNERS RISK ASSESSMENTS

-Soft Landscape Works
-Earthworks (for reference only)

DESIGNER'S RISK ASSESSMENT: SOFT LANDSCAPE WORKS

Item No.	Location and Item	Hazard Type Potential to cause harm	Severity of accident (L/M/H)	Likely - hood (L/M/H)	Risk Rating (1 to 9)	Measures required to eliminate, reduce or protect persons	Remarks (for Principal Designer use)
1.0	**Services**					**Liaise with Principal Contractor to ascertain location of services.**	
1.1	Electricity	Electrocution	H	L	3	1 Trial holes	
1.2	Gas	Explosion Asphyxiation	H	L	3	2 Handworks around services where required	
1.3	Other Services		L	L	1	3 Ensure excavator drivers have a trained banksmen.	
2.0	**Collision with plant. Throughout site**		H	L	3	1 Be alert as to what is operating and where. 2 Take notice of drivers and banksmen. 3 Never pass near moving plant (e.g. excavators) until you are certain that you have been seen by the driver. 4 In accordance with good site practice and HSE requirements wear safety helmets, protective footwear and high visibility waistcoats/clothing. 5 Ensure unattended plant is switched off.	
3.0	**Lifting and unloading materials**	Muscular strain, back injury etc.	M	M	4	1 Wherever possible the appropriate lifting/moving equipment must be used. 2 If Manual Handling is unavoidable assess weight of object before attempting to lift. 3 Only personnel trained in manual handling techniques should attempt to lift/unload. 4 If the lift is considered feasible, proceed using correct posture and technique. 5 If not, get assistance / use appropriate lifting/moving equipment. 6 Move in stages to reduce risk.	
4.0	**Use of machinery**		M	L	2	1 Ensure all operators are suitably qualified. 2 Ensure that machines are properly guarded and that all operatives are properly protected. 3 Stay well clear of operating machines. 4 Signal to operatives to shut down machine if you want to enter the area. 5 Ensure machines are suitable for the degree of slope being worked.	

Barry Chinn Associates Limited: Harbury Road, Deppers Bridge, Southam, Warwickshire, CV47 2SZ Registered in England No. 6839538

DESIGNER'S RISK ASSESSMENT: SOFT LANDSCAPE WORKS

Item No.	Location and Item	Hazard Type Potential to cause harm	Severity of accident (L/M/H)	Likely - hood (L/M/H)	Risk Rating (1 to 9)	Measures required to eliminate, reduce or protect persons	Remarks (for CDM Co-ordinators use)
5.0	**Working in close proximity to retaining walls**						
5.1	Falling from top of wall	General injury	M	M	4	1 Ensure top of wall is clearly marked with protective barriers and tapes. 2 Exhibit precaution and awareness at all times.	
5.2	Materials falling from top of wall		L	H	3	1 Ensure all materials and topsoil is heaped away from top of wall. 2 Be aware when in close proximity to retaining wall of works occurring at a higher level and make sure that you have been seen by those working above. 3 Ensure safety zone is marked in car park using barriers/tapes to prevent public access to area directly adjoining/below retaining wall.	
5.3	Access: Falling from ladders or similar		-	-	0	1 All access to upper level working to be via footpaths and level ground. Avoid use of ladders / platforms to reach areas above retaining walls.	
6.0	**Use of Horticultural Chemicals**		-	-	-	1 Refer to manufacturers material safety data sheet for instructions on safe handling and use. 2 Follow manufacturers instructions on the application and disposal of chemicals and containers. 3 Ensure that only operatives holding a current certificate of competence from the National Proficiency Test Council are engaged to carry out spraying work. 4 Keep a daily record of all chemicals and concentrations used. 5 Avoid accidental inhalation of chemical sprays and skin contact with concentrate. 6 Do not leave any chemicals unattended on site at any time.	

DESIGNER'S RISK ASSESSMENT: SOFT LANDSCAPE WORKS

Item No.	Location and Item	Hazard Type Potential to cause harm	Severity of accident (L/M/H)	Likely - hood (L/M/H)	Risk Rating (1 to 9)	Measures required to eliminate, reduce or protect persons	Remarks (for CDM Co-ordinators use)
6.0	Use of Horticultural Chemicals cont'd		-	-	-	7 Chemicals to be locked away in contractors compound or taken off site when not in use. 8 Operators must ensure at all times that chemicals are not used in circumstances that could adversely affect other persons in the immediate vicinity.	
7.0	**Car parking**	General injury resulting from collision	L	L	1	1 Wear high visibility waistcoat and / or jacket. 2 Agree working compound / access with Principal Contractor prior to commencing work. a. Cone / barrier off working space and safety room as necessary. b. Use tape/rope to prevent accidental straying into the car park roads. c. Use signs to slow down/control cars.	
8.0	**Highways**	General injury resulting from collision	M	L	2	1 Wear high visibility waistcoat and / or jacket. 2 Never take up station in the highway unless specific arrangements and provisions have been made through the Principal Contractor / Highways Authority to: a. Cone / barrier off working space and safety room. b. Use tape/rope to prevent accidental straying into the road. c. Use traffic signs to slow down traffic. d. Use lights/signs to control traffic.	

DESIGNER'S RISK ASSESSMENT: EARTHWORKS

Item No.	Location and Item	Hazard Type Potential to cause harm	Severity of accident (L/M/H)	Likely - hood (L/M/H)	Risk Rating (1 to 9)	Measures required to eliminate, reduce or protect persons	Remarks (for Principal Designer use)
1.0	**Services**					**Liaise with Principal Contractor to ascertain location of services.**	
1.1	Electricity	Electrocution	H	L	3	1 Trial holes	
1.2	Gas	Explosion Asphyxiation	H	L	3	2 Handworks around services where required	
1.3	Other Services		L	L	1	3 Ensure excavator drivers have a trained banksmen.	
2.0	**Collision with plant. Throughout site**		H	L	3	1 Be alert as to what is operating and where. 2 Take notice of drivers and banksmen. 3 Never pass near moving plant (e.g. excavators) until you are certain that you have been seen by the driver. 4 In accordance with good site practice and HSE requirements wear safety helmets, protective footwear and high visibility waistcoats/clothing. 5 Ensure unattended plant is switched off.	
3.0	**Lifting and unloading materials**	Muscular strain, back injury etc.	M	M	4	1 Wherever possible the appropriate lifting/moving equipment must be used. 2 If Manual Handling is unavoidable assess weight of object before attempting to lift. 3 Only personnel trained in manual handling techniques should attempt to lift/unload. 4 If the lift is considered feasible, proceed using correct posture and technique. 5 If not, get assistance / use appropriate lifting/moving equipment. 6 Move in stages to reduce risk.	

DESIGNER'S RISK ASSESSMENT: EARTHWORKS

Item No.	Location and Item	Hazard Type Potential to cause harm	Severity of accident (L/M/H)	Likely - hood (L/M/H)	Risk Rating (1 to 9)	Measures required to eliminate, reduce or protect persons	Remarks (for Principal Designer use)
4.0	**Use of machinery**		M	L	2	1 Ensure all operators are suitably qualified. 2 Ensure that machines are properly guarded and that all operatives are properly protected. 3 Stay well clear of operating machines. 4 Signal to operatives to shut down machine if you want to enter the area. 5 Ensure machines are suitable for the degree of slope being worked.	
5.0	**Working in close proximity to retaining walls**						
5.1	Falling from top of wall	General injury	M	M	4	1 Ensure top of wall is clearly marked with protective barriers and tapes. 2 Exhibit precaution and awareness at all times.	
5.2	Materials falling from top of wall		L	H	3	1 Ensure all materials and topsoil is heaped away from top of wall. 2 Be aware when in close proximity to retaining wall of works occurring at a higher level and make sure that you have been seen by those working above. 3 Ensure safety zone is marked in car park using barriers/tapes to prevent public access to area directly adjoining/below retaining wall.	
5.3	Access: Falling from ladders or similar		-	-	0	1 All access to upper level working to be via footpaths and level ground. Avoid use of ladders / platforms to reach areas above retaining walls.	
6.0	**Excavation of Tree Pits**		L	L	1	1 Albeit the excavation of tree pits is not particularly deep be aware of leaving open holes unprotected.	

DESIGNER'S RISK ASSESSMENT: EARTHWORKS

Item No.	Location and Item	Hazard Type Potential to cause harm	Severity of accident (L/M/H)	Likely - hood (L/M/H)	Risk Rating (1 to 9)	Measures required to eliminate, reduce or protect persons	Remarks (for Principal Designer use)
7.0	**Car parking**	General injury resulting from collision	L	L	1	1 Wear high visibility waistcoat and / or jacket. 2 Agree working compound / access with Principal Contractor prior to commencing work. a. Cone / barrier off working space and safety room as necessary. b. Use tape/rope to prevent accidental straying into the car park roads. c. Use signs to slow down/control cars.	
8.0	**Highways**	General injury resulting from collision	M	L	2	1 Wear high visibility waistcoat and / or jacket. 2 Never take up station in the highway unless specific arrangements and provisions have been made through the Principal Contractor / Highways Authority to: a. Cone / barrier off working space and safety room. b. Use tape/rope to prevent accidental straying into the road. c. Use traffic signs to slow down traffic. d. Use lights/signs to control traffic.	