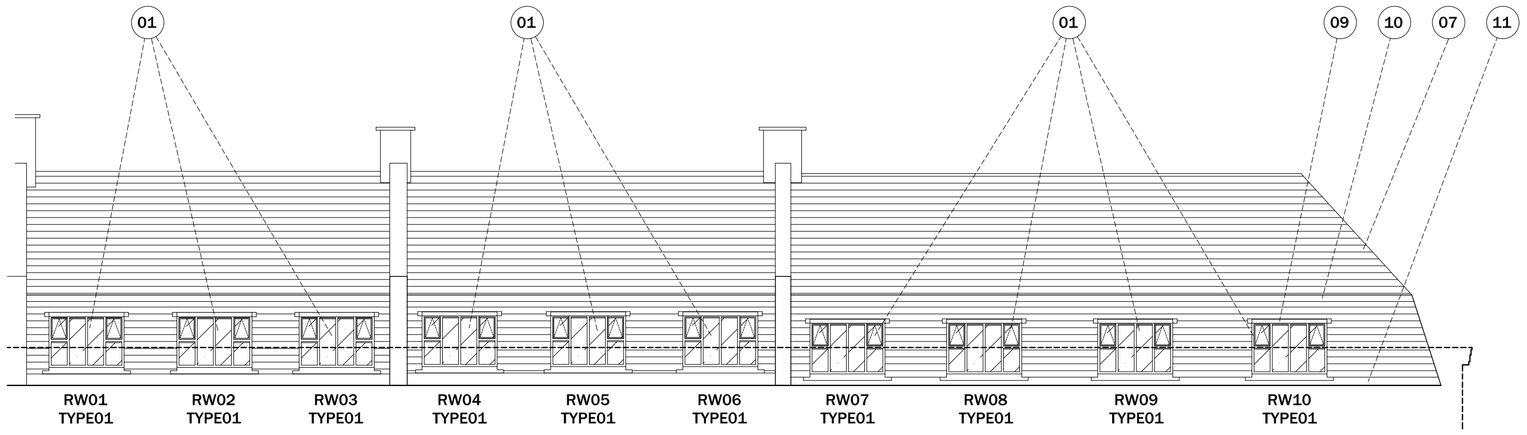

EXISTING PORTLAND STREET ELEVATION

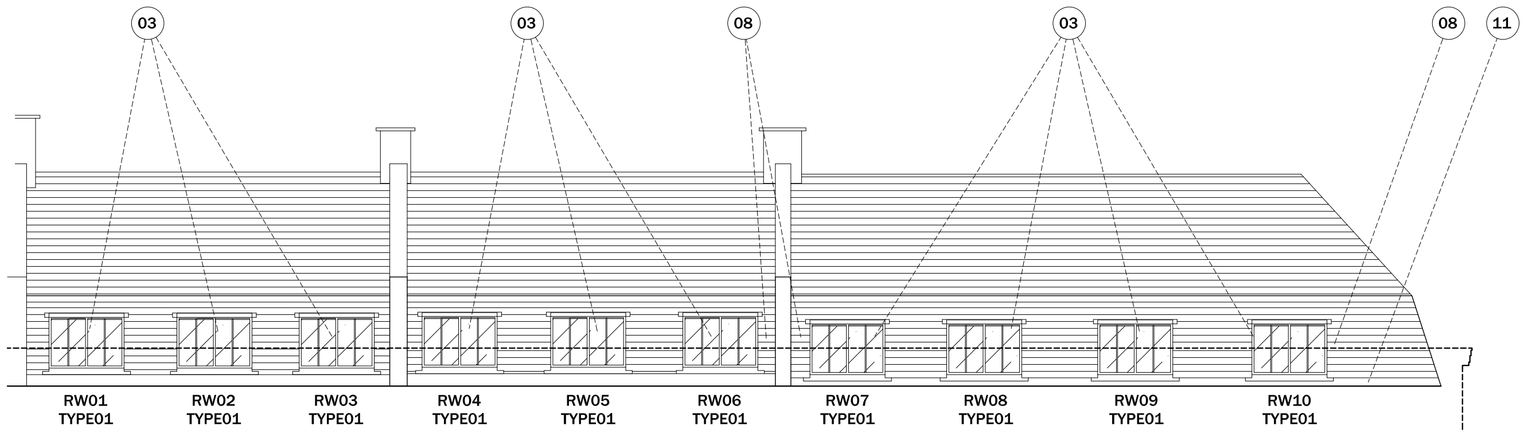

PROPOSED PORTLAND STREET ELEVATION

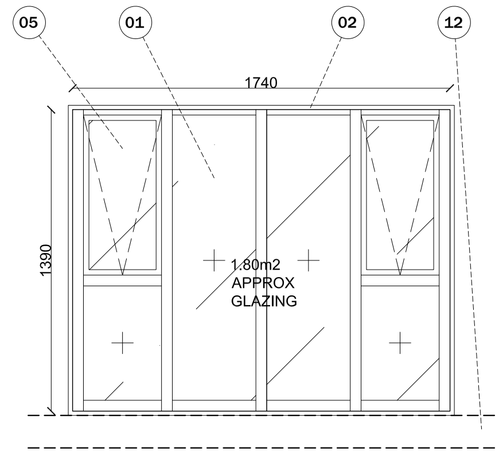

EXISTING INTERIOR ELEVATION
WINDOW TYPE 1

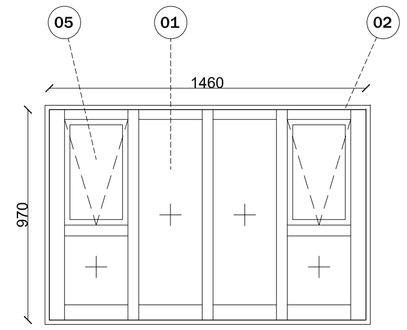

EXISTING INTERIOR ELEVATION
WINDOW TYPE 2

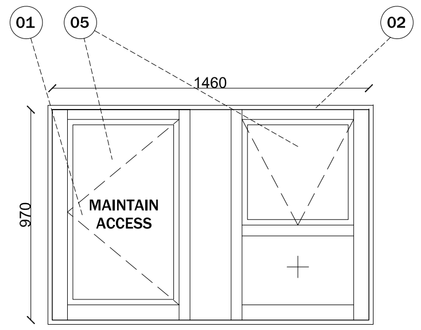

EXISTING INTERIOR ELEVATION
WINDOW TYPE 3

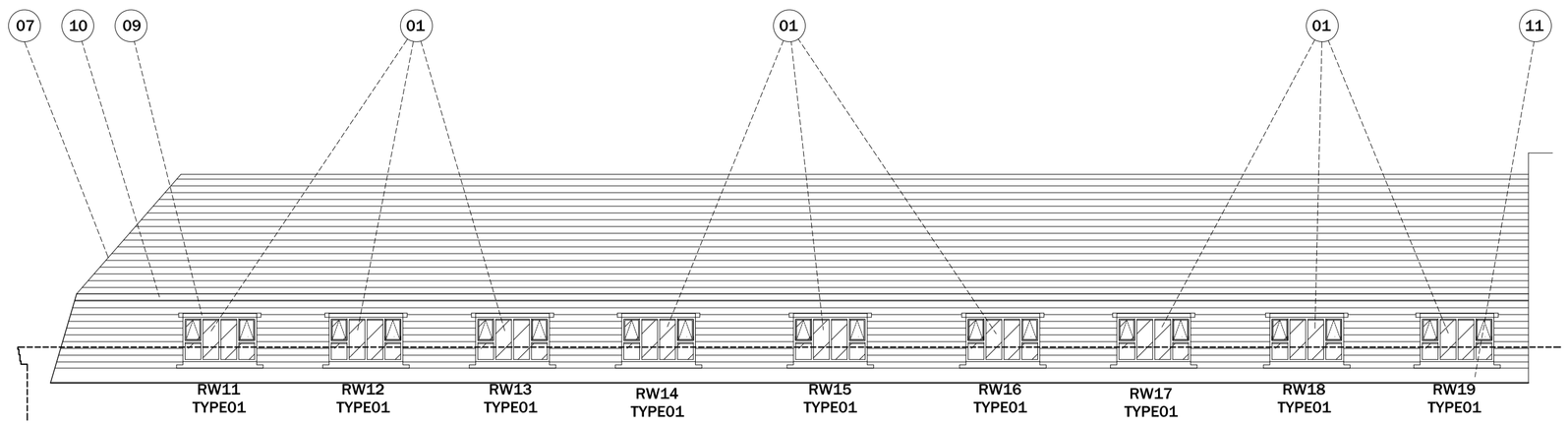

EXISTING DICKINSON STREET ELEVATION

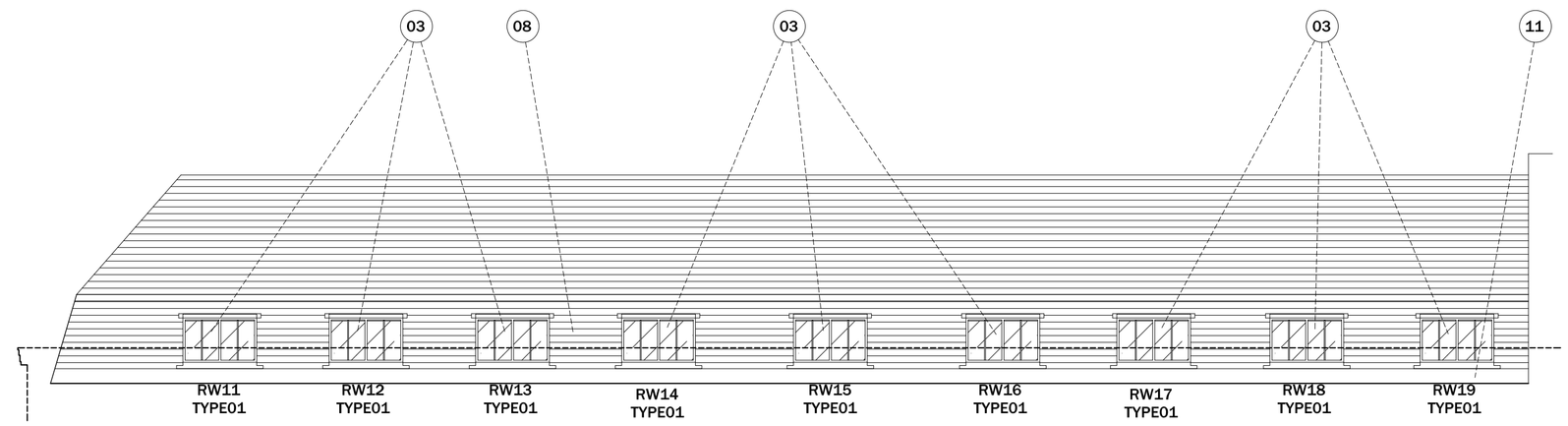

PROPOSED DICKINSON STREET ELEVATION

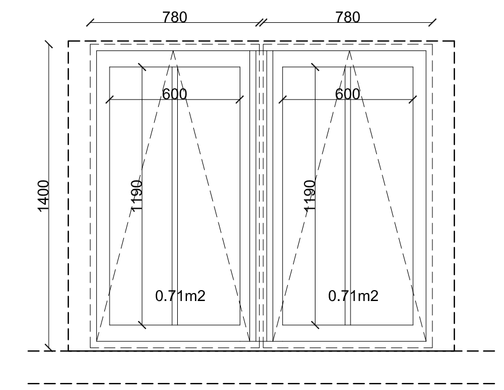

PROPOSED INTERIOR ELEVATION
WINDOW TYPE 1
VELUX CONSERVATION STANDARD SIZES
MK08 780x1400 TOP HUNG WITH HORIZONTAL DUO FLASHING
RW01-RW19

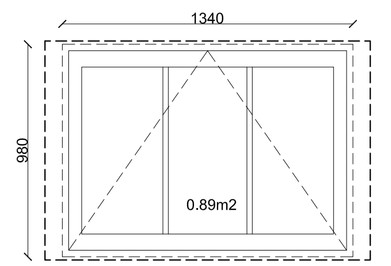

PROPOSED INTERIOR ELEVATION
WINDOW TYPE 2
VELUX CONSERVATION STANDARD SIZES
UK04 1340x980 CENTRE PIVOT
RW20-RW24

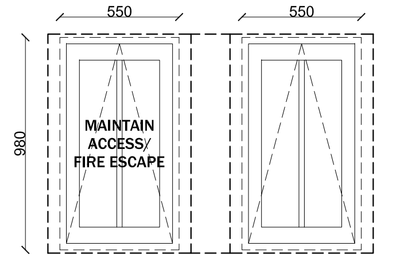

PROPOSED INTERIOR ELEVATION
WINDOW TYPE 3
VELUX (OR SIMILAR APPROVED) CONSERVATION
2no. CK04 550x980mm TOP HUNG
RW25

SURVEY: WCGEO
WCG 18-1105-IMS-4F-1:1

NOTES
1. Existing timber (oak) roof window (to be removed). Total no.25 windows
2. Remove existing oak window Interior reveal & make good reveal with plasterboard & painted skim finish to detail.
3. New low-profile conservation-style roof window. Into existing structural opening approx 60-70°slate roof with all lead flashings and soakers as required by manufacture. Max u value 1.8W/(m².K) for the whole unit. Structural sizes TBC by contractor.
4. Glazing bar
5. Existing opening panel
6. Proposed opening panel
7. Existing slate roof
8. Area of slate immediately surrounding all roof windows to be removed during course of works and reinstalled. Carefully remove existing slates and retain for reuse. Remove any damaged slates and replace with new slate to match existing.
9. Existing lead flashing over oak window to be removed. New proprietary roof window baseplate and flashing kit to detail.
10. Existing lead flashing to be retained at change in mansard pitch. Note: Flashing kit to proposed windows to manufacturer's recommendation.
11. Lead flashing upstand to parapet gutter to be retained and any areas disturbed to be made good.
12. Existing timber purlin. Where timber is exposed and visibly watermarked make good visual appearance by localised sanding and decoration as contractor's proposals.

revision	date	description
A	29.03.2019	NOTES REVISED.

notes Use only written dimensions. All areas are indicative. Contractor to check measurements on site prior to commencement. Notify the Architect of any discrepancies.

This drawing must only be used for the purpose for which it has been supplied.

Do not scale this drawing.

MgMaStudio/
architecture

Oriel Chambers: Suite 37
14 Water Street Liverpool L2 8TD

t +44 (0) 151 236 6627
design@mgmastudio.co.uk
www.mgmastudio.co.uk

client BRUNTWOOD WORKS

project 113-119 PORTLAND STREET
MANCHESTER

drawing EXISTING/ PROPOSED ELEVATIONS

scale 1:100/ 1:20 @ A1

date 14.03.2019

revision A

no. 8-007_101

0 0.25 0.5 1m
1:20

0 1 2 5m
1:100