Air Conditioning

Product Information

PLA-M R32
4-Way Blow Ceiling Cassette System
Standard Inverter Heat Pump
Single Phase

Making a World of Difference

Mr.SLIM



The **PLA-M** Standard Inverter range is a ceiling cassette system that blends a host of outstanding features with a sophisticated streamlined design. Offering advanced control options and quiet operation, this range provides extreme flexibility and ease of installation whilst being cost effective.

Key Features

- Improved airflow control, including horizontal airflow for greater comfort
- Optional 3D i-see sensor grille (PLP-6EAE) provides customised comfort by automatically monitoring room occupancy, position and body temperatures
- Optional filter lowering operation down to 4m (PLP-6EAJ)
- Replace Technology available
- New single fan chassis on 12.5 and 14kW models

MITSUBISHI ELECTRIC

Cooling | Heating | Ventilation | Controls

R32

Air Conditioning

Product Information

PLA-M R32
4-Way Blow Ceiling Cassette System
Standard Inverter Heat Pump
Single Phase

Making a World of Difference









PLA-M - INDOOR UNITS		PLA-M35EA	PLA-M50EA	PLA-M60EA	PLA-M71EA	PLA-M100EA	PLA-M125EA	PLA-M140EA
CAPACITY (kW)	Heating (nominal)	4.1 (1.0-5.0)	6.0 (1.5-7.2)	7.0 (1.6-8.0)	8.0 (2.0-10.2)	11.2 (2.8-12.5)	13.5 (4.1-15.0)	15.0 (4.2-15.8)
	Cooling (nominal)	3.6 (0.8-3.9)	5.5 (1.2-5.6)	6.1 (1.6-6.3)	7.1 (2.2-8.1)	9.5 (4.0-10.6)	12.1 (5.8-13.0)	13.4 (5.8-14.1)
	Heating (UK)	3.49 (0.85-4.26)	5.11 (1.28-6.13)	6.13 (1.36-6.81)	6.81 (1.70-8.68)	9.63 (2.41-10.75)	11.49 (3.49-12.77)	12.77 (3.57-13.45)
	Cooling (UK)	3.31 (0.74-3.60)	5.06 (1.10-5.15)	5.61 (1.47-5.80)	6.53 (2.02-7.45)	8.65 (3.64 - 9.65)	11.01 (5.28-11.83)	12.19 (5.28-12.83)
SHF (nominal)		0.91	0.77	0.79	0.74	0.77	0.72	0.70
COP / EER (nominal)		4.20 / 4.00	3.46 / 3.40	3.80 / 3.30	3.61 / 3.70	3.71 / 3.50	3.71 / 3.01	3.41 / 2.70
SCOP (ηsh) / SEER (ηsc) (BS EN14825)		4.70 / 7.40	4.10 / 6.70	4.40 / 6.60	4.50 / 7.50	4.60 / 7.00	4.1 (162%) / 5.6 (231.9%)	4.1 (161.3%) / 5.7 (232.7%)
ErP ENERGY EFFICIENCY CLASS	Heating/Cooling	A++ / A++	A+ / A++	A+ / A++	A+ / A++	A++ / A++	A+ / A+	A+ / A+
AIRFLOW (l/s)	Lo-Mi-Mi2-Hi	183-217-250-267	200-233-317-350	200-233-317-350	233-283-317-350	317-383-433-483	350-417-467-517	400-433-483-533
PIPE SIZE mm (in)	Gas/Liquid	9.52 (3/8") / 6.35 (1/4")	12.7 (1/2") / 6.35 (1/4")	15.88 (5/8") / 6.35 (1/4")	15.88 (5/8") / 9.52 (3/8")	15.88 (5/8") / 9.52 (3/8")	15.88 (5/8") / 9.52 (3/8")	15.88 (5/8") / 9.52 (3/8")
SOUND PRESSURE LEVEL (dBA)	Lo-Mi-Mi2-Hi	26-28-29-31	27-29-31-32	27-29-31-32	28-30-32-34	31-34-37-40	33-37-41-44	36-39-42-44
SOUND POWER LEVEL (dBA)		51	54	54	56	61	65	65
DIMENSIONS (mm)	Width x Depth x Height (Grille)	840 (950) x 840 (950) x 258 (40)	840 (950) x 840 (950) x 258 (40)	840 (950) x 840 (950) x 258 (40)	840 (950) x 840 (950) x 258 (40)	840 (950) x 840 (950) x 298 (40)	840 (950) x 840 (950) x 298 (40)	840 (950) x 840 (950) x 298 (40)
WEIGHT (kg)	Unit / Panel	19 / 5	19 / 5	21 / 5	21 / 5	24 / 5	26 / 5	26 / 5
ELECTRICAL SUPPLY		Fed by Outdoor Unit	Fed by Outdoor Unit	Fed by Outdoor Unit	Fed by Outdoor Unit	Fed by Outdoor Unit	Fed by Outdoor Unit	Fed by Outdoor Unit
FUSE RATING (BS88) - HRC (A)		6	6	6	6	6	6	6
INTERCONNECTING CABLE No. Cores		4	4	4	4	4	4	4
GRILLE REFERENCE		PLP-6EA	PLP-6EA	PLP-6EA	PLP-6EA	PLP-6EA	PLP-6EA	PLP-6EA
WIRED REMOTE CONTROLLER REFERENCE		PAR-40MAA	PAR-40MAA	PAR-40MAA	PAR-40MAA	PAR-40MAA	PAR-40MAA	PAR-40MAA
WIRELESS REMOTE CONTROLLER REFERENCE		PAR-SL100A-E	PAR-SL100A-E	PAR-SL100A-E	PAR-SL100A-E	PAR-SL100A-E	PAR-SL100A-E	PAR-SL100A-E

SUZ-M / PUZ-M - OUTDOOR UNITS		SUZ-M35VA	SUZ-M50VA	SUZ-M60VA	SUZ-M71VA	PUZ-M100VKA	PUZ-M125VKA	PUZ-M140VKA
SOUND PRESSURE LEVEL (dBA)	Heating/Cooling	48 / 48	48 / 49	49 / 51	49 / 51	51 / 54	54 / 56	55 / 57
SOUND POWER LEVEL (dBA)	Cooling	59	64	65	66	70	72	73
WEIGHT (kg)		35	41	54	55	76	84	84
DIMENSIONS (mm)	Width x Depth x Height	800 x 285 x 550	800 x 285 x 714	840 x 330 x 880	840 x 330 x 880	1050 x 330 x 981	1050 x 330 x 981	1050 x 330 x 981
ELECTRICAL SUPPLY		220-240v, 50Hz	220-240v, 50Hz	220-240v, 50Hz	220-240v, 50Hz	220-240v, 50Hz	220-240v, 50Hz	220-240v, 50Hz
PHASE		Single	Single	Single	Single	Single	Single	Single
SYSTEM POWER INPUT (kW)	Heating/Cooling (nominal)	0.97 / 0.90	1.73 / 1.61	1.84 / 1.84	2.21 / 1.91	3.01 / 2.71	3.63 / 4.01	4.39 / 4.96
	Heating/Cooling (UK)	0.83 / 0.77	1.47 / 1.39	1.56 / 1.58	1.88 / 1.64	2.71 / 2.50	3.27 / 3.33	3.59 / 4.12
STARTING CURRENT (A)		5.0	8.0	9.3	9.5	13.0	17.4	21.5
SYSTEM RUNNING CURRENT (A)	Heating/Cooling [MAX]	5.0 / 4.1 [8.5]	8.0 / 7.1 [13.5]	9.3 / 8.4 [14.8]	9.5 / 9.1 [14.8]	13.0 / 11.7 [20]	15.6 / 17.4 [26.5]	19.0 / 21.5 [30]
FUSE RATING (BS88) - HRC (A)		10	20	20	20	32	32	40
MAINS CABLE No. Cores		3	3	3	3	3	3	3
MAX PIPE LENGTH (m)		20	30	30	30	55	65	65
MAX HEIGHT DIFFERENCE (m)		12	30	30	30	30	30	30
CHARGE REFRIGERANT (kg) / CO_2 EQUIVALENT (t)	R32 (GWP 675)	0.90 / 0.61	1.20 / 0.81	1.25 / 0.84	1.45 / 0.98	3.10 / 2.09	3.60 / 2.43	3.60 / 2.43
MAX ADDITIONAL REFRIGERANT (kg) / CO_2 EQUIVALENT (t)	R32 (GWP 675)	1.16 / 0.78	1.66 / 1.12	1.71 / 1.15	2.37 / 1.80	4.10 / 2.77	5.00 / 3.38	5.00 / 3.38

Note: No duty/standby operation on SUZ-M35/50/60/71VA.

PRODUCT DIMENSIONS — PLA-M35/50/60/71/100/125/140EA

Lower View

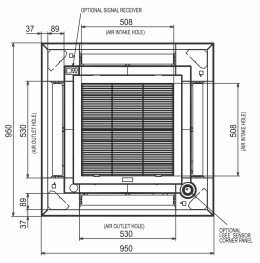

Upper View

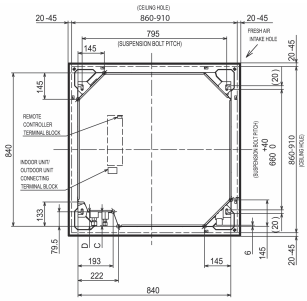

Front View

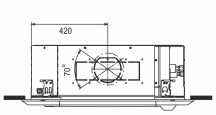

Side View

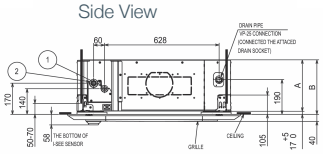

PLA-M(E)A**:35/50/60/71/100/125/140

M	①	②	A	B	C	D
35/50	REFRIGERANT PIPE Φ 6.35 FLARED CONNECTION 1/4F	REFRIGERANT PIPE Φ 12.7 FLARED CONNECTION 1/2F	241	258	76	76.5
60	REFRIGERANT PIPE Φ 6.35 / Φ 9.52 FLARED CONNECTION 1/4F / 3/8F (COMPATIBLE)	REFRIGERANT PIPE Φ 15.88 FLARED CONNECTION 5/8F			80.5	
71						79.5
100-140	REFRIGERANT PIPE Φ 9.52 FLARED CONNECTION 3/8F		281	298	79.5	

MITSUBISHI ELECTRIC
Changes for the Better

Telephone: 01707 282880
email: air.conditioning@meuk.mee.com
web: airconditioning.mitsubishielectric.co.uk

UNITED KINGDOM Mitsubishi Electric Europe Living Environment Systems Division
Travellers Lane, Hatfield, Hertfordshire, AL10 8XB, England General Enquiries Telephone: 01707 282880 Fax: 01707 278881
IRELAND Mitsubishi Electric Europe Westgate Business Park, Ballymount, Dublin 24, Ireland
Telephone: Dublin (01) 419 8800 Fax: Dublin (01) 419 8890 International code: (003531)

Green Gateway
www.greengateway.mitsubishielectric.co.uk
Mitsubishi Electric UK's commitment to the environment

Follow us @meuk_les
Follow us @green_gateway
Mitsubishi Electric Living Environmental Systems UK
mitsubishielectric2
thehub.mitsubishielectric.co.uk

Country of origin: United Kingdom – Japan – Thailand – Malaysia. ©Mitsubishi Electric Europe 2019. Mitsubishi and Mitsubishi Electric are trademarks of Mitsubishi Electric Europe B.V. The company reserves the right to make any variation in technical specification to the equipment described, or to withdraw or replace products without prior notification or public announcement. Mitsubishi Electric is constantly developing and improving its products. All descriptions, illustrations, drawings and specifications in this publication present only general particulars and shall not form part of any contract. All goods are supplied subject to the Company's General Conditions of Sale, a copy of which is available on request. Third-party product and brand names may be trademarks or registered trademarks of their respective owners.

Note: The fuse rating is for guidance only. Please refer to the relevant databook for detailed specification. It is the responsibility of a qualified electrician/electrical engineer to select the correct cable size and fuse rating based on current regulation and site specific conditions. Mitsubishi Electric's air conditioning equipment and heat pump systems contain a fluorinated greenhouse gas, R410A (GWP:2088), R32 (GWP:675), R407C (GWP:1774) or R134a (GWP:1430). *These GWP values are based on Regulation (EU) No 517/2014 from IPCC 4th edition. In case of Regulation (EU) No.626/2011 from IPCC 3rd edition, these are as follows. R410A (GWP:1975), R32 (GWP: 550), R407C (GWP:1650) or R134a (GWP:1300).

Effective as of January 2019