CONDITION I -
ASSUMED CONSTRUCTION BASED ON PREVIOUS ARCHITECT'S DRAWINGS.

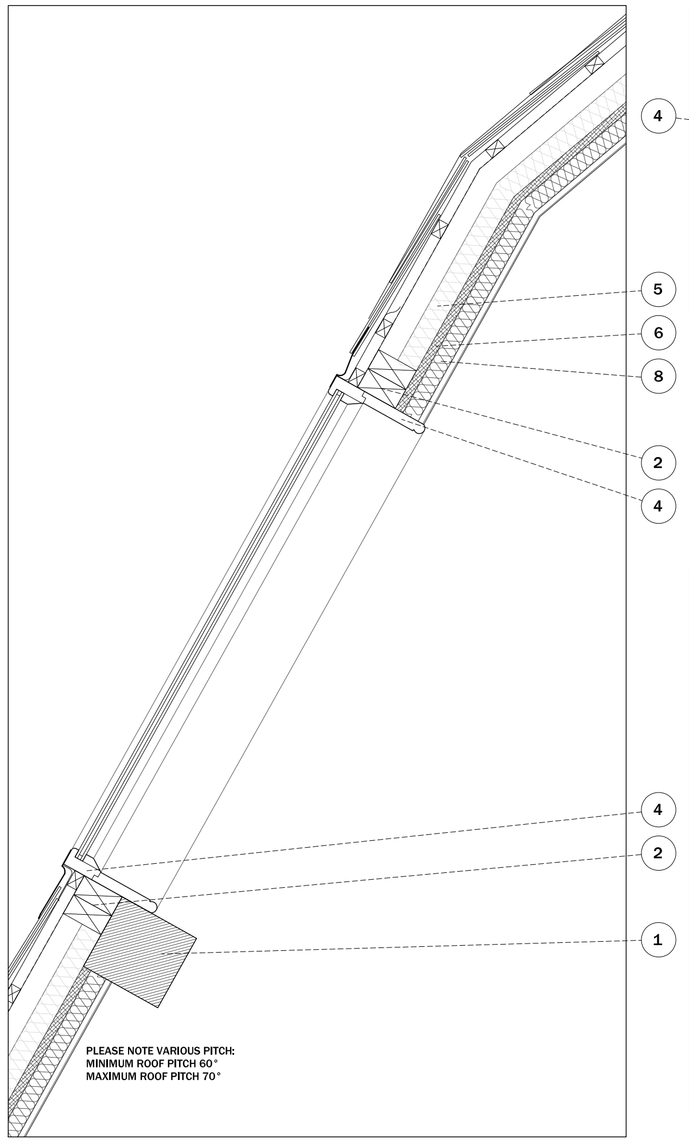

EXISTING SECTION A - CONDITION I
SCALE 1:10

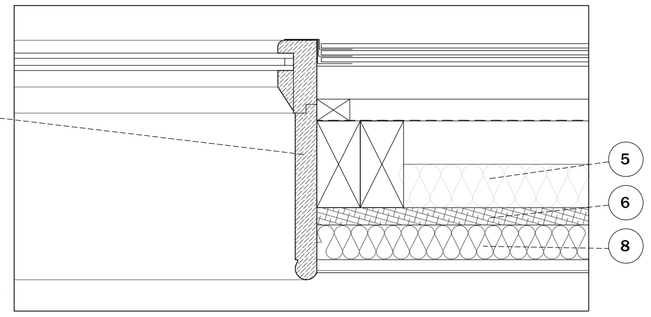

EXISTING PLAN VIEW
SCALE 1:5

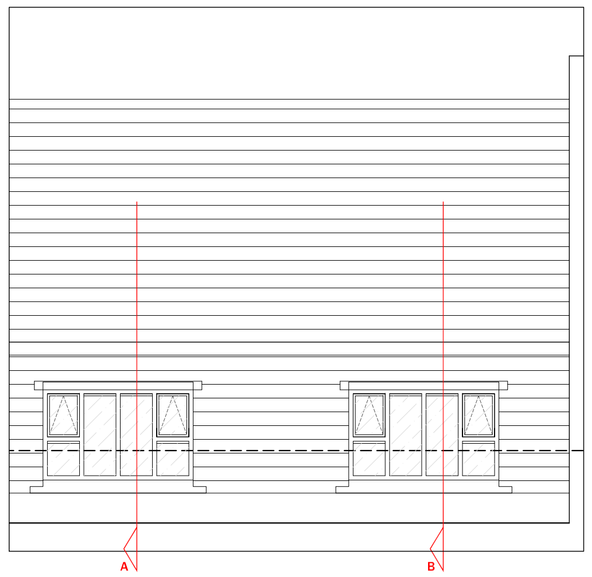

EXISTING DICKINSON STREET ELEVATION (EXTRACT)
SCALE 1:50

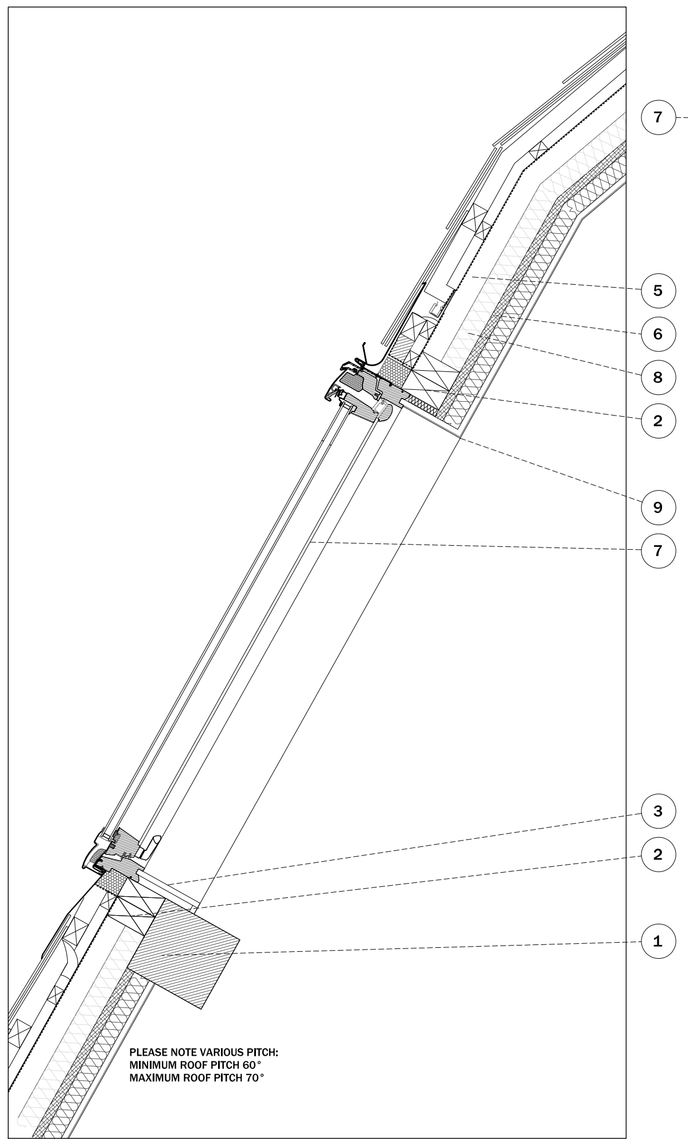

PROPOSED SECTION A - CONDITION I
SCALE 1:10

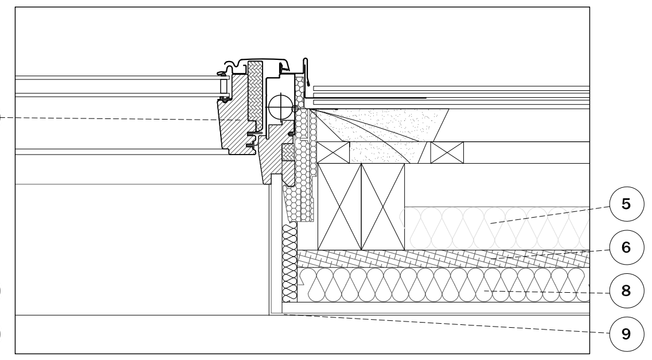

PROPOSED PLAN VIEW
SCALE 1:5

REFER TO VELUX STANDARD INSTALLATION DETAILS.

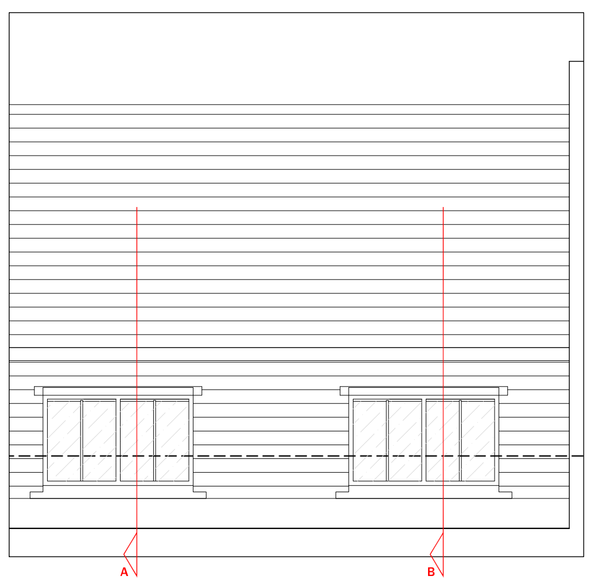

PROPOSED DICKINSON STREET ELEVATION (EXTRACT)
SCALE 1:50

CONDITION II -
ASSUMED CONSTRUCTION BASED ON SITE INSPECTION.

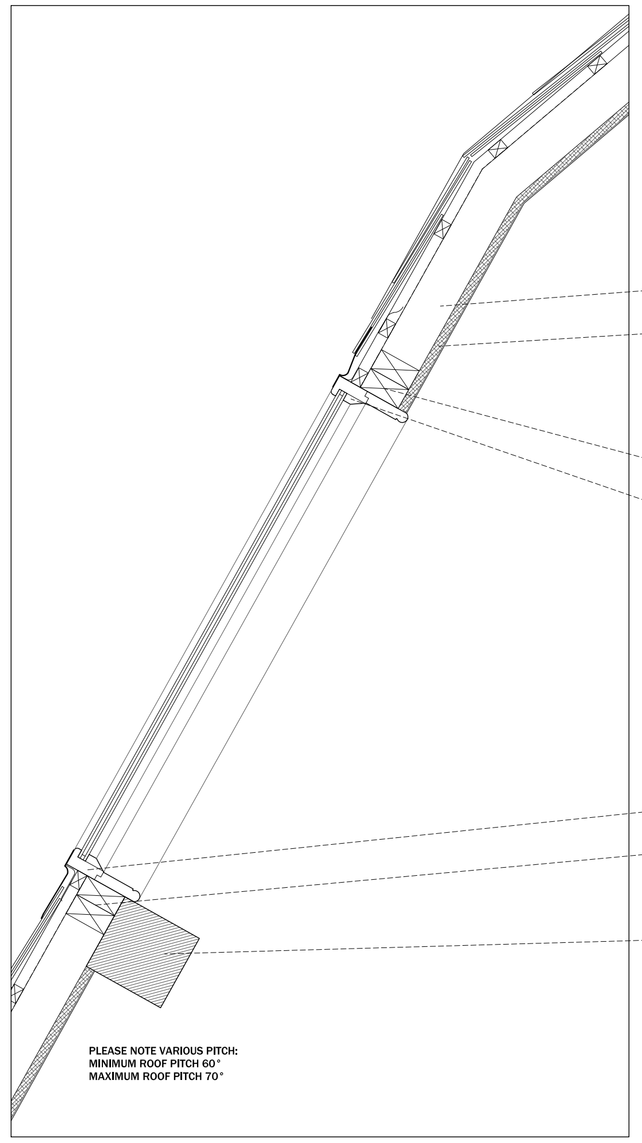

EXISTING SECTION B - CONDITION II
SCALE 1:10

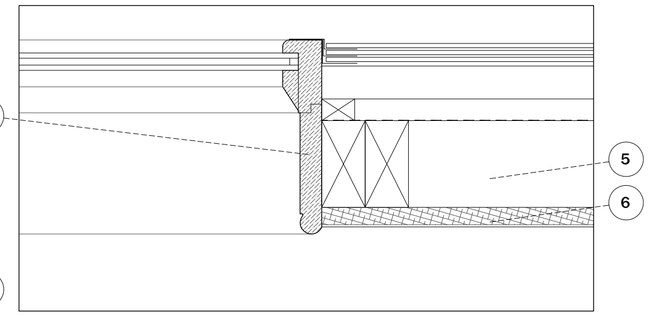

EXISTING PLAN VIEW
SCALE 1:5

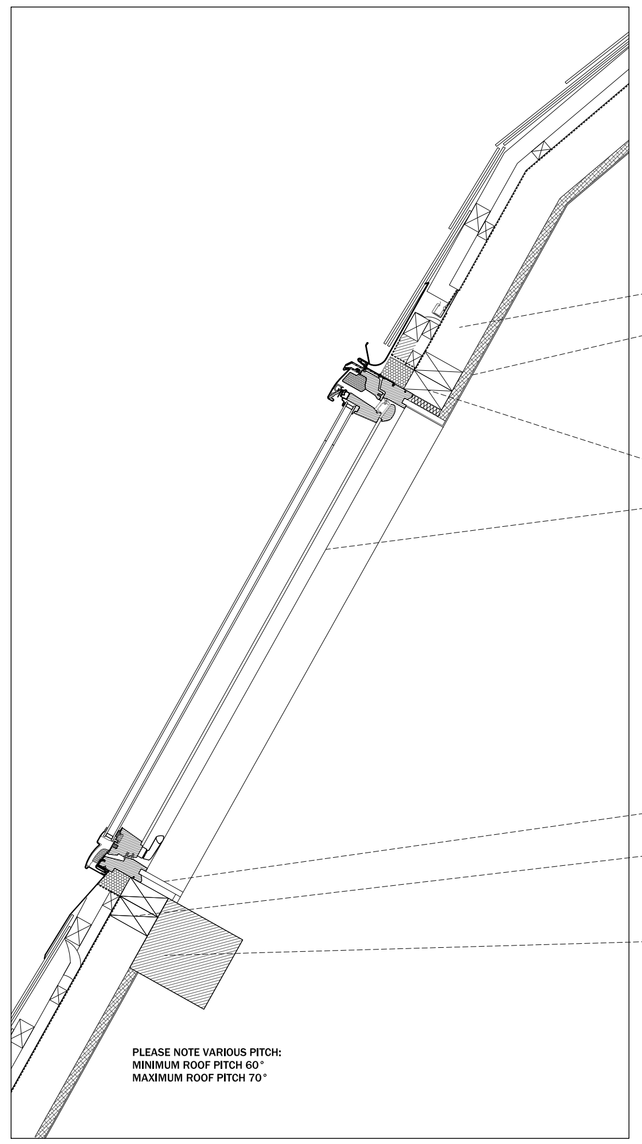

PROPOSED SECTION B - CONDITION II
SCALE 1:10

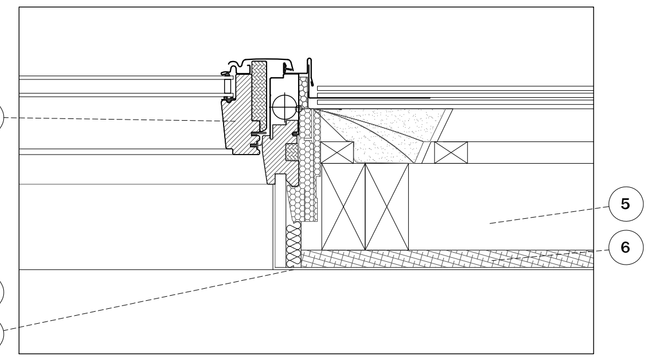

PROPOSED PLAN VIEW
SCALE 1:5

REFER TO VELUX STANDARD INSTALLATION DETAILS.

NOTES:

1. Existing timber purlin.
2. Trimming rafter.
3. Timber board to match existing purlin.
4. Existing timber casement window.
5. Confirm presence, thickness & condition of any insulation between rafters.
6. Existing lath & plaster.
7. New low-profile recessed conservation-style roof window, flush fitting into approx 60° slate roof with all flashings and soakers as required by manufacture. Max u-value 1.8W/(m².K) for the whole unit. Structural sizes TBC by contractor.
8. Insulated plasterboard with paint skim finish.
9. Where required make good with paint skim finish.

revision	date	description
A	03.05.2019	PROPOSED SECTIONS A, B & PLAN VIEWS REVISED.

notes Use only written dimensions. All areas are indicative. Contractor to check measurements on site prior to commencement. Notify the Architect of any discrepancies.

This drawing must only be used for the purpose for which it has been supplied.

Do not scale this drawing.

MgMaStudio/ architecture

Oriel Chambers: Suite 37
14 Water Street Liverpool L2 8TD

t +44 (0) 151 236 6627
design@mgmastudio.co.uk
www.mgmastudio.co.uk

PROVISIONAL
NOT FOR CONSTRUCTION
SUBJECT TO PLANNING &
BUILDING REGULATIONS APPROVAL

client BRUNTWOOD WORKS

project 113-119 PORTLAND STREET, MANCHESTER

drawing TYPICAL SECTION THROUGH EXISTING & PROPOSED ROOF WINDOW: SHOWING TWO CONDITION OPTIONS.

scale VARIOUS @ A1

date 04.04.2019

revision A

no. 8-007_104

0 50 100 200mm 1:5

0 100 200 400mm 1:10